E — ORDER POINT CANOPY - NO SHROUD - BLACK (E035641)

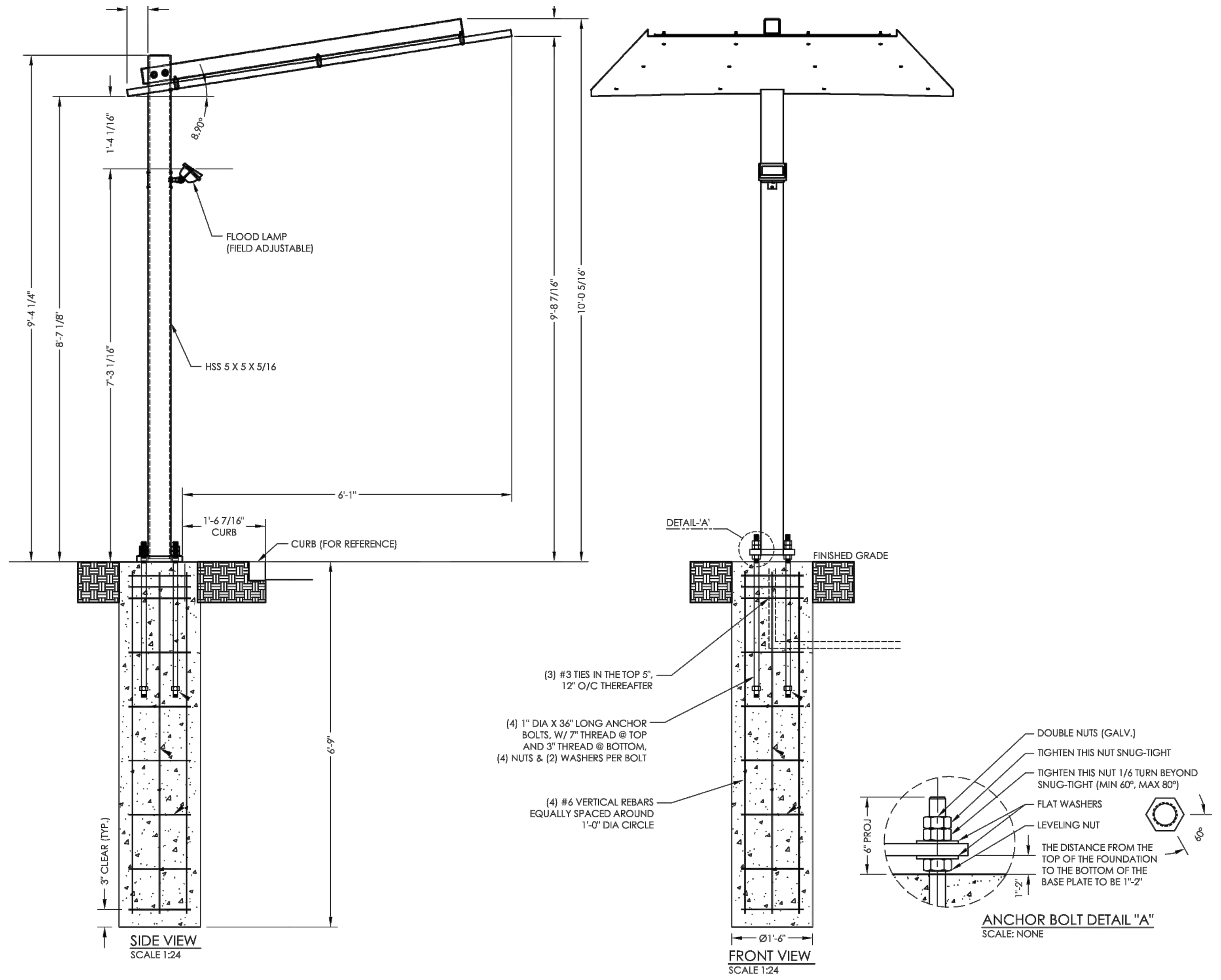

GENERAL NOTES
INSTALLER TO PROVIDE COMPLETION PHOTOS OF FOUNDATION, GROUT INSTALLATION, BASE PLATES, ANCHOR BOLTS, MATCH PLATE, WELDING CONNECTIONS AND OVERALL ELEVATION.

THIS SIGN IS INTENDED TO BE INSTALLED IN ACCORDANCE WITH THE REQUIREMENTS OF ARTICLE 600 OF THE NATIONAL ELECTRIC CODE AND/OR OTHER APPLICABLE LOCAL CODES. THIS INCLUDES PROPER GROUNDING AND BONDING OF THE SIGN.

INSTALLER TO BE SURE CANOPY ARE PROPERLY INSTALLED, CONNECTED AND GROUNDED.

LANDSCAPING MATERIALS SHOULD BE KEPT TO A MINIMUM OF TWO INCHES AWAY FROM SIGN POLES OR BASE PLATES.

THIS DRAWING IS FOR INSTALLATION PURPOSES ONLY AND NOT TO BE USED FOR MANUFACTURING.

CONCRETE SPECIFICATION
THE REQUIRED 0.45 CU. YDS. OF FOUNDATION CONCRETE SHALL HAVE A MIN. COMPRESSIVE STRENGTH OF 3,000 PSI @ 28 DAYS. REINFORCING STEEL SHALL HAVE A MIN. YIELD STRENGTH OF 60,000 PSI. RECOMMENDED MIN. CURE TIME OF 7 DAYS BEFORE PROCEEDING WITH INSTALLATION.

LIFTING HOLE NOTE
ANY LIFTING HOLES CREATED ARE THE RESPONSIBILITY OF THE INSTALLER. LIFTING HOLES ARE TO BE SEALED BY A CAP PLATE, WELDED OVER TO COVER AND THEN PAINTED.

WELDING NOTE
ANY REQUIRED WELDING IS TO BE COMPLETED BY AN AWS CERTIFIED WELDER QUALIFIED IN THE APPLICABLE POSITIONS NEEDED.

DESIGN NOTE
SIGN, POLE, AND CONCRETE FOUNDATION ARE DESIGNED TO WITHSTAND A WIND LOAD OF 35 PSF & A SNOW LOAD OF 35 PSF

CONCRETE BASE DESIGNED USING A LATERAL SOIL BEARING CAPACITY OF 150 PSF / FT. OF DEPTH. IF THESE SOIL CONDITIONS DO NOT EXIST AT THE FOUNDATION LOCATION, IT IS THE ERECTOR'S RESPONSIBILITY TO NOTIFY EVERBRITE, LLC PRIOR TO PERFORMING ADDITIONAL EXCAVATION OR ANY CONCRETE PLACEMENT.

INSTALLATION INSTRUCTIONS
1. STAKE FOUNDATION AREA AND CONFIRM FINAL GRADE REQUIREMENTS WITH G. C.
2. EXCAVATE FOUNDATION AREA.
4. SET CONDUIT STUB, ANCHOR BOLTS AND REBAR.
5. POUR CONCRETE. ALLOW CONCRETE CURE TIME AS REQUIRED (A MINIMUM OF 7 DAYS IS SUGGESTED BEFORE CONTINUING WITH INSTALLATION).
5. SET COLUMN PLUMB AND ANCHOR AS SHOWN IN A.B. DETAIL.
6. MOUNT CANOPY TO POLE.
7. MAKE FINAL ELECTRICAL HOOK UP (ALL ELECTRICAL TO MEET LOCAL CODES.)
8. TEST SIGN FOR PROPER FUNCTION.
9. REMOVE ANY LIFTING BRACKETS AND REINSTALL BOLTS.
10. CLEAN UP AREA AND REMOVE ANY PACKING MATERIAL.

EVERBRITE TO FURNISH
1. 6'-0" X 5'-0" CANOPY
2. ANCHOR BOLTS AND NUTS
3. ALL MOUNTING HARDWARE

INSTALLER TO FURNISH
1. ALL ELECTRICAL COMPONENTS REQUIRED
2. FOUNDATION

ELECTRICAL SPECS:
(1) 15 WATT LED FIXTURE 1500 LUMENS 4000K
0.125 - 0.034 -AMPS @ 120/277 VAC - 50/60 HZ

CANOPY EST. WEIGHT:
372 POUNDS

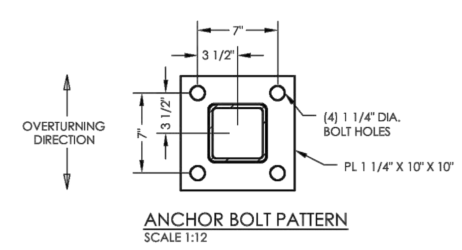

Everbrite, LLC · 4949 South 110th Street · Greenfield, WI 53228 · www.everbrite.com

Customer/Site No: 40434	Prepared By: Christopher Koob
Address: BELVIDERE ROAD LAKEMOOR, IL 60050	Date: 03/25/2022 · PIF: 466740-0
Description: TACO BELL	Customer Signature:

Page 17 of 35

These drawings and designs are the exclusive property of Everbrite, LLC. Use or duplication in any manner, without express written permission of Everbrite, LLC, is prohibited.

F — CLEARANCE BAR - 9' CLEARANCE BLACK (E035642)

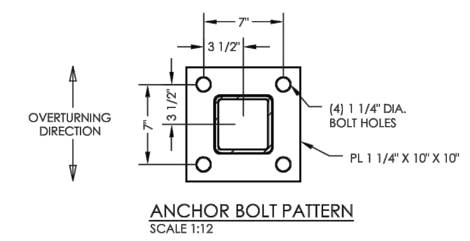

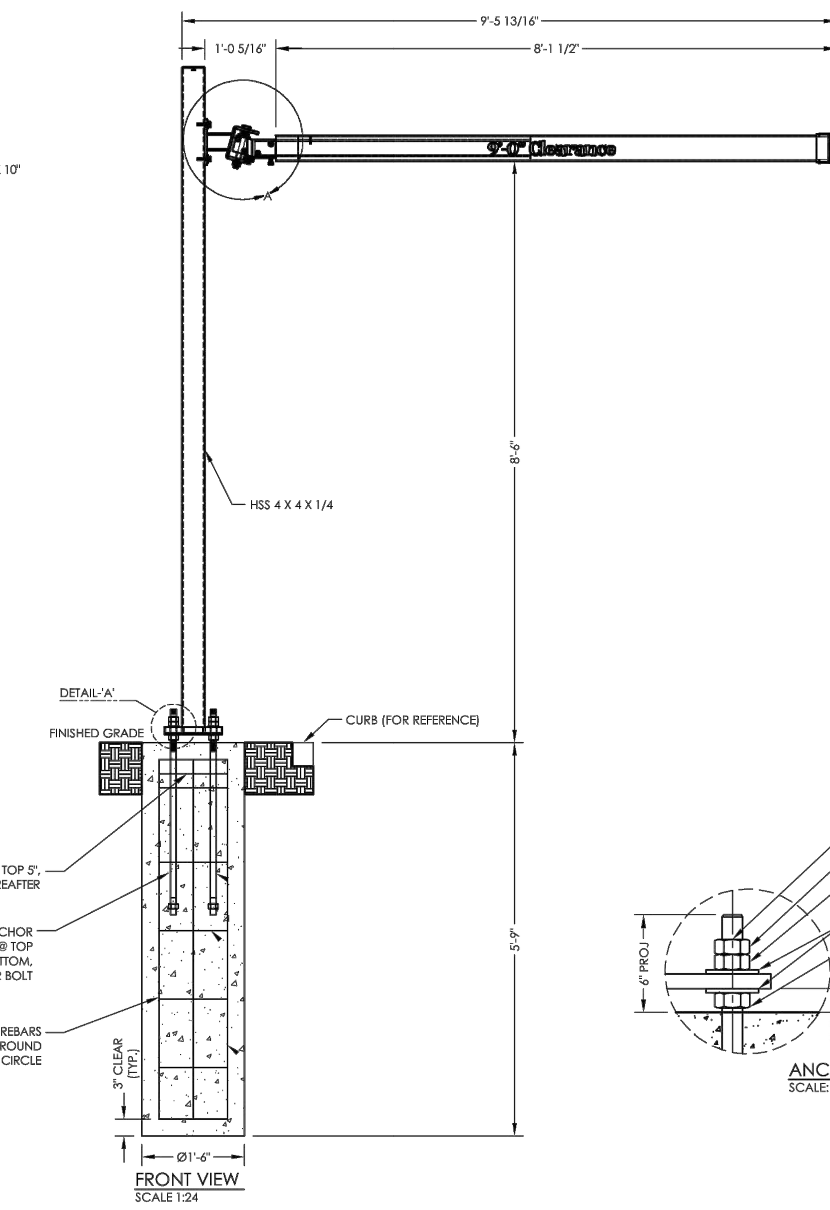

GENERAL NOTES
INSTALLER TO PROVIDE COMPLETION PHOTOS OF FOUNDATION, BASE PLATES, ANCHOR BOLTS, MATCH PLATE, WELDING CONNECTIONS AND OVERALL ELEVATION.

INSTALLER TO BE SURE PORTAL IS PROPERLY INSTALLED.

THIS DRAWING IS FOR INSTALLATION PURPOSES ONLY AND NOT TO BE USED FOR MANUFACTURING.

LANDSCAPING MATERIALS SHOULD BE KEPT TO A MINIMUM OF TWO INCHES AWAY FROM SIGN POLES OR BASE PLATES.

CONCRETE SPECIFICATION
THE REQUIRED 0.38 CU. YDS. OF FOUNDATION CONCRETE SHALL HAVE A MIN. COMPRESSIVE STRENGTH OF 3,000 PSI @ 28 DAYS. REINFORCING STEEL SHALL HAVE A MIN. YIELD STRENGTH OF 60,000 PSI. RECOMMENDED MIN. CURE TIME OF 7 DAYS BEFORE PROCEEDING WITH INSTALLATION.

LIFTING HOLE NOTE
ANY LIFTING HOLES CREATED ARE THE RESPONSIBILITY OF THE INSTALLER. LIFTING HOLES ARE TO BE SEALED BY A CAP PLATE, WELDED OVER TO COVER AND THEN PAINTED.

WELDING NOTE
ANY REQUIRED WELDING IS TO BE COMPLETED BY AN AWS CERTIFIED WELDER QUALIFIED IN THE APPLICABLE POSITIONS NEEDED.

DESIGN NOTE
PORTAL POLE, AND CONCRETE FOUNDATION ARE DESIGNED TO WITHSTAND A WIND LOAD OF 29 PSF

CONCRETE BASE DESIGNED USING A LATERAL SOIL BEARING CAPACITY OF 150 PSF / FT. OF DEPTH. IF THESE SOIL CONDITIONS DO NOT EXIST AT THE FOUNDATION LOCATION, IT IS THE ERECTOR'S RESPONSIBILITY TO NOTIFY EVERBRITE, LLC PRIOR TO PERFORMING ADDITIONAL EXCAVATION OR ANY CONCRETE PLACEMENT.

INSTALLATION INSTRUCTIONS
1. STAKE FOUNDATION AREA AND CONFIRM FINAL GRADE REQUIREMENTS WITH G. C.
2. EXCAVATE FOUNDATION AREA.
4. SET CONDUIT STUB, ANCHOR BOLTS AND REBAR.
5. POUR CONCRETE. ALLOW CONCRETE CURE TIME AS REQUIRED (A MINIMUM OF 7 DAYS IS SUGGESTED BEFORE CONTINUING WITH INSTALLATION).
5. SET COLUMN PLUMB AND ANCHOR AS SHOWN IN A.B. DETAIL.
6. MOUNT CLEARANCE BAR TO POLE.
7. REMOVE ANY LIFTING BRACKETS AND REINSTALL BOLTS.
8. CLEAN UP AREA AND REMOVE ANY PACKING MATERIAL.

EVERBRITE TO FURNISH
1. CLEARANCE BAR W/ POLE
2. ANCHOR BOLTS AND NUTS
3. ALL MOUNTING HARDWARE

INSTALLER TO FURNISH
1. FOUNDATION

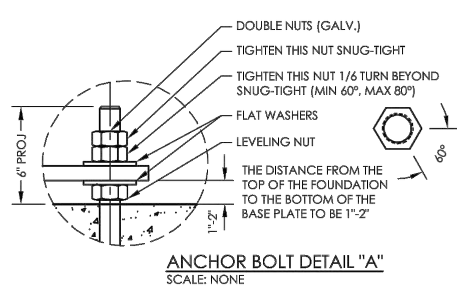

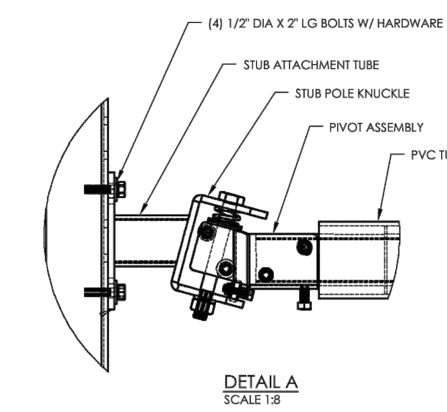

Everbrite, LLC · 4949 South 110th Street · Greenfield, WI 53228 · www.everbrite.com

Customer/Site No: 40434	Prepared By: Christopher Koob
Address: BELVIDERE ROAD LAKEMOOR, IL 60050	Date: 03/25/2022 · PIF: 466740-0
Description: TACO BELL	Customer Signature:

Page 18 of 35

These drawings and designs are the exclusive property of Everbrite, LLC. Use or duplication in any manner, without express written permission of Everbrite, LLC, is prohibited.

N — MENUBOARD AND SPEAKER POST

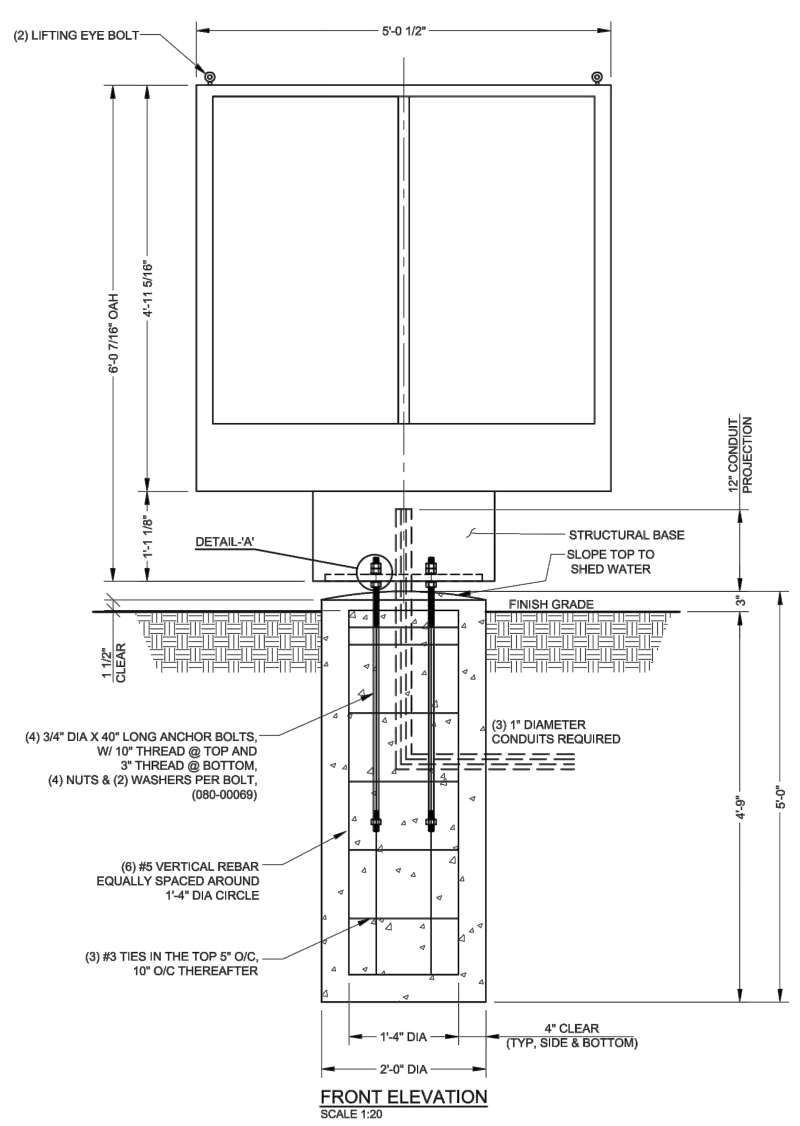

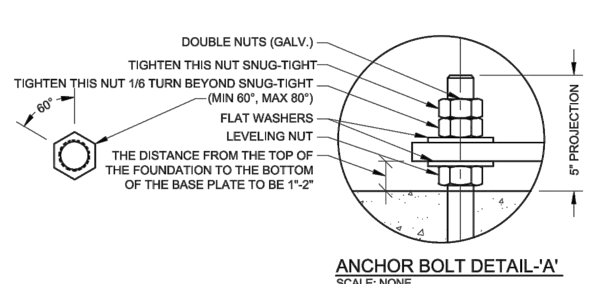

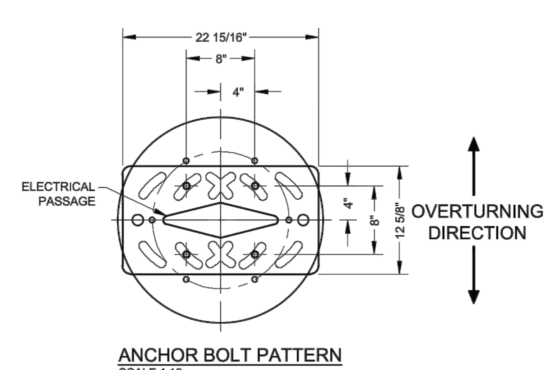

1. 6'-0 7/16" X 5'-0 1/2" MENU BOARD WITH POLE
2. (4) ANCHOR BOLTS AND NUTS
3. ALL MOUNTING HARDWARE

INSTALLER TO FURNISH
1. ALL ELECTRICAL COMPONENTS REQUIRED
2. FOUNDATION

GENERAL CONTRACTOR TO FURNISH
1. PRIMARY WIRES FROM BUILDING TO SIGN

ELECTRICAL SPECIFICATION :
POWER SUPPLIES : HARDWIRED AC POWER
120/240V 50/60Hz
1150W (@ MAX LOAD)
UL RATED @ 10Amp
BACKLIGHT: LED LIGHT SOURCE
380 CD/M2 TO 3,500 CD/M2

WEIGTH : 915 LBS

INSTALLER TO PROVIDE COMPLETION PHOTOS OF THE FOLLOWING
1. MATCH PLATE/SIGN CONNECTIONS
2. BEFORE AND AFTER PHOTOS OF ALL PLUG WELDS, CAP PLATE WELDS, AND ANY OTHER WELDED CONNECTIONS DONE IN THE FIELD
3. ELECTRICAL WIRING
4. ALL SIGN ILLUMINATING (PREFRABLY SHOWING LED'S OR LAMPS ILLUMINATING)
5. ANY WALL PENETRATION CAULKED AND SEALED
6. OVERALL ELEVATION

GENERAL NOTES
THIS SIGN IS INTENDED TO BE INSTALLED IN ACCORDANCE WITH THE REQUIREMENTS OF ARTICLE 600 OF THE NATIONAL ELECTRIC CODE AND/OR OTHER APPLICABLE LOCAL CODES. THIS INCLUDES PROPER GROUNDING AND BONDING OF THE SIGN AND INSTALLING DISCONNECT SWITCHES IF NOT FACTORY INSTALLED ON THE SIGN.

SIGN ASSEMBLY IS INTENDED FOR OUTDOOR WET LOCATION.

INSTALLER TO BE SURE SIGNS ARE PROPERLY INSTALLED, CONNECTED AND GROUNDED.

LANDSCAPING MATERIALS SHOULD BE KEPT MINIMUM TWO INCHES AWAY FROM SIGN POLES OR BASE PLATES.

THIS DRAWING IS FOR INSTALLATION PURPOSES ONLY AND NOT TO BE USED FOR MANUFACTURING.

CONCRETE SPECIFICATION
0.58 CU. YDS. TOTAL. CONCRETE SHALL HAVE A MIN. COMPRESSIVE STRENGTH OF 3,000 PSI @ 28 DAYS. REINFORCING STEEL SHALL HAVE A MIN. YIELD STRENGTH OF 60,000 PSI. RECOMMENDED MIN. CURE TIME OF 7 DAYS BEFORE PROCEEDING WITH INSTALLATION.

LIFTING HOLE NOTE
ANY LIFTING HOLES CREATED ARE THE RESPONSIBILITY OF THE INSTALLER. LIFTING HOLES ARE TO BE SEALED BY A CAP PLATE, WELDED OVER TO COVER AND THEN PAINTED.

WELDING NOTE
ANY REQUIRED WELDING IS TO BE COMPLETED BY AN AWS CERTIFIED WELDER QUALIFIED IN THE APPLICABLE POSITIONS NEEDED. PROOF OF WELDER CERTIFICATION REQUIRED (COPY OF WELDER CERTIFICATION,PHOTO OF AWS CERTIFICATION CARD OF PERSON DOING THE WELDING).

DESIGN NOTE
SIGN, POLE AND CONCRETE FOUNDATION ARE DESIGNED TO WITHSTAND AN ALLOWABLE WIND LOAD OF 35 PSF, 123 MPH,IBC 2009,EXPOSURE C.

CONCRETE BASE DESIGNED USING A LATERAL SOIL BEARING CAPACITY OF 150 PSF / FT. OF DEPTH. IF THESE SOIL CONDITIONS DO NOT EXIST AT THE FOUNDATION LOCATION, IT IS THE ERECTOR'S RESPONSIBILITY TO NOTIFY EVERBRITE, LLC PRIOR TO PERFORMING ADDITIONAL EXCAVATION OR ANY CONCRETE PLACEMENT.

INSTALLATION INSTRUCTIONS
1. STAKE FOUNDATION AREA AND CONFIRM FINAL GRADE REQUIREMENTS WITH G. C.
2. EXCAVATE FOUNDATION AREA.
3. SET ANCHOR BOLTS, REBAR AND CONDUIT STUB. (PRIMARY ELECTRICAL SERVICE TO BASE BY G.C.)
4. POUR CONCRETE. ALLOW CONCRETE CURE TIME AS REQUIRED. RECOMMENDED MIN. CURE TIME OF 7 DAYS BEFORE PROCEEDING WITH INSTALLATION.
5. ANCHOR POLE(S) AS SHOWN IN AB DETAIL. CHECK FOR PLUMB.
6. MOUNT SIGNAGE TO POLE(S). (INSTALLER TO PROVIDE WIRE BETWEEN SIGN AND BASE OF POLE.)
7. MAKE FINAL ELECTRICAL HOOK-UP. (ALL ELECTRICAL TO MEET LOCAL CODES.)
8. TEST SIGNAGE FOR PROPER FUNCTION AND LIGHTING.
9. REMOVE ANY LIFTING BRACKETS AND REINSTALL BOLTS.
10. CLEAN UP AREA AND REMOVE ANY PACKING MATERIAL. DO NOT DISCARD ANY MATERIAL OR DEBRIS INTO ON SITE DUMPSTERS.

Everbrite, LLC · 4949 South 110th Street · Greenfield, WI 53228 · www.everbrite.com

Customer/Site No: 40434	Prepared By: Christopher Koob
Address: BELVIDERE ROAD LAKEMOOR, IL 60050	Date: 03/25/2022 · PIF: 466740-0
Description: TACO BELL	Customer Signature:

Page 33 of 35

These drawings and designs are the exclusive property of Everbrite, LLC. Use or duplication in any manner, without express written permission of Everbrite, LLC, is prohibited.

DRAWING NUMBER	ISSUE
900032	A

THE INFORMATION CONTAINED IN THIS DRAWING IS PROPRIETARY AND MUST NOT BE COPIED OR DISCLOSED TO THIRD PARTIES WITHOUT PRIOR WRITTEN CONSENT FROM THE OWNER

STEP 4

1. TURN ON AC MAINS AND VERIFY THAT THE SYSTEM FUNCTIONS PROPERLY.
2. SLIDE THE ACCESS PANELS (FRONT AND REAR) CLOSE AND LOCK.

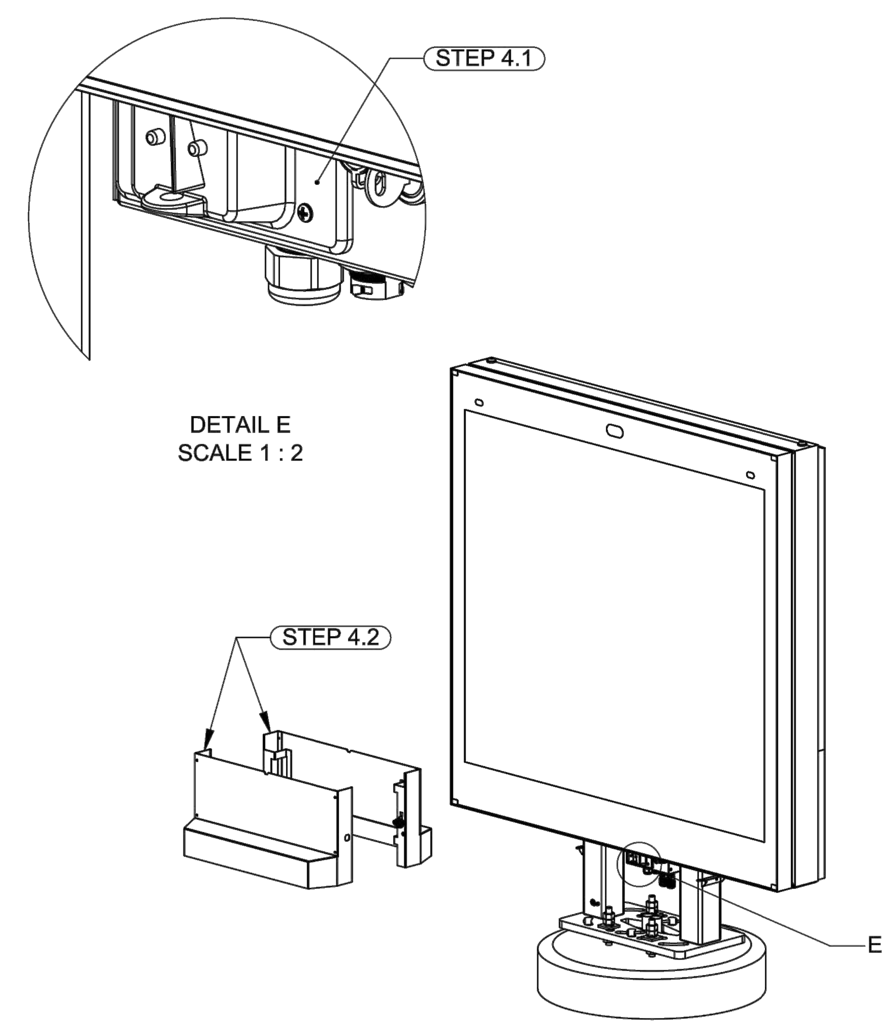

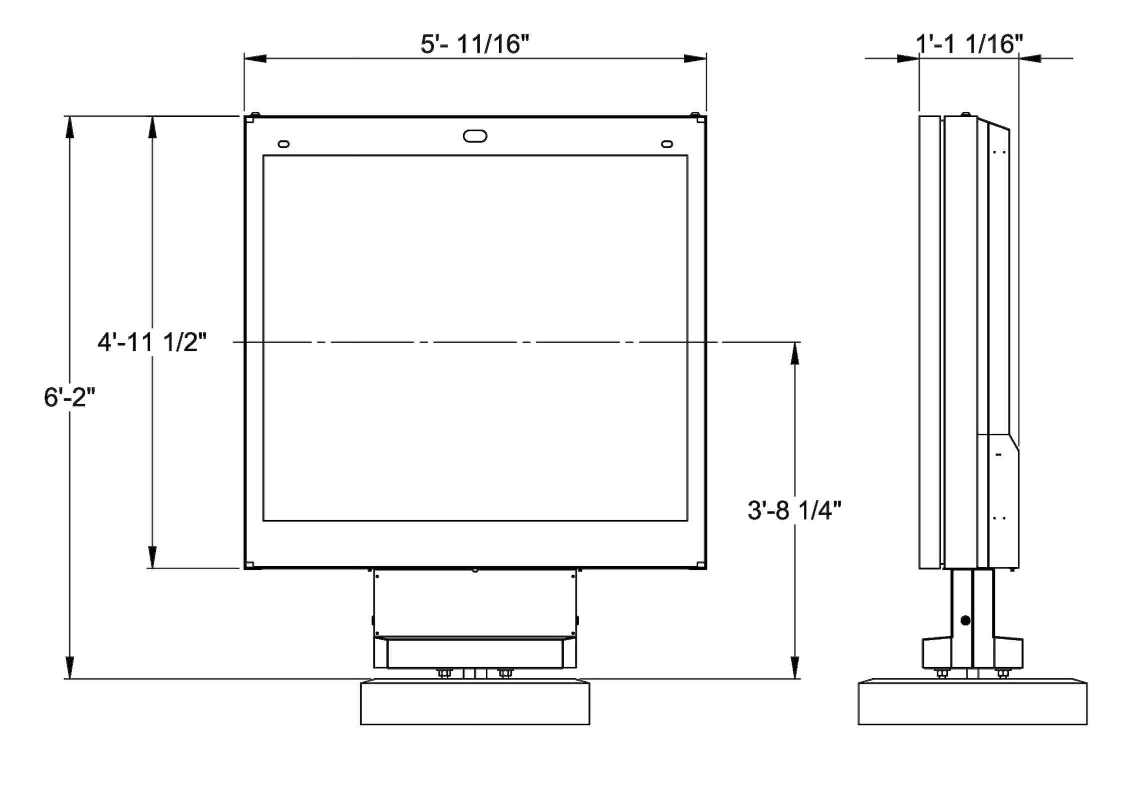

TOLERANCES EXCEPT WHERE OTHERWISE STATED:	NEXT ASSEMBLY		STRATACACHE	
HOLE DIAMETER ±0.08; X. ±0.50; X.X ±0.25; X.XX ±0.13; ANGLE ±0.5°	MATERIAL: Material <not specified>		TITLE: FIELD ASSEMBLY DETAIL - DOUBLE	
	FINISH: -		PART NUMBER: 900032	
ALL DIMENSIONS IN MM [INCHES]	DRAWN: NAK	DATE: 4/10/2018 · SIZE: A3	DRAWING NUMBER: 900032	ISSUE: A
PROJECTION	APPROVED: STC	DATE: 4/10/2018 · SCALE: 1:18	PROJECT: **V12-MP**	SHEET 5 OF 5

REFERENCE 3D GEOMETRY FOR MISSING DIMENSIONS

REMOVE ALL BURRS AND SHARP EDGES

CAD model file: 900032 (Default)

PRELIMINARY BID SET

SUBMITTAL & REVISION RECORD

NO	DATE	DESCRIPTION

Civil & Environmental Consultants, Inc.
11 Municipal Drive · Suite 300 · Fishers, IN 46038
Ph: 317.655.7777 · 877.746.0749 · Fax: 317.655.7778
www.cecinc.com

BELL CAROLINA, LLC.
TACO BELL
567 SPEARS CREEK CHURCH ROAD
ELGIN, SC 29045

SITE DETAILS

DATE:	05/19/2022
DRAWN BY:	KRG
DWG SCALE:	AS NOTED
CHECKED BY:	DRAFT
PROJECT NO:	320-610
APPROVED BY:	DRAFT

DRAWING NO.: **C804**

SHEET 14 OF 19

P:\320-000\320-610\-CADD\Dwg\CV01 Construction Documents\320610-CV01-C800.dwg{C804} LS:(5/24/2022 - kgancasz) - LP: 5/24/2022 2:45 PM