SECOND EDITION

Textbook of ENGINEERING DRAWING

K Venkata Reddy

BS Publications

Textbook of Engineering Drawing

Second Edition

Click Here For More Ebooks

K. Venkata Reddy
Prof. & HOD of Mechanical Engineering Dept.
C.R. Engineering College,
Tirupati - 517 506

BSP BS Publications
4-4-309, Giriraj Lane, Sultan Bazar,
Hyderabad - 500 095 - A.P.
Phone : 040 - 23445688

Copyright © 2008, *by Publisher*

All rights reserved

No part of this book or parts thereof may be reproduced, stored in a retrieval system or transmitted in any language or by any means, electronic, mechanical, photocopying, recording or otherwise without the prior written permission of the publishers.

Published by :

BSP BS Publications

4-4-309, Giriraj Lane, Sultan Bazar,
Hyderabad - 500 095 - A.P.
Phone : 040 - 23445688
e-mail : contactus@bspublications.net
www.bspublications.net

Printed at

Adithya Art Printers
Hyderabad

ISBN : 81-7800-149-7

Contents

CHAPTER - 1

Drawing Instruments and Accessories 1.1-1.5

1.1 Introduction, 1.1

1.2 Role of Engineering Drawing, 1.1

1.3 Drawing Instrument and Aids, 1.1

1.3.1 Drawing Board, 1.2

1.3.2 Mini-Draughter, 1.2

1.3.3 Instrument Box, 1.2

1.3.4 Set of Scales, 1.3

1.3.5 French Curves, 1.4

1.3.6 Templates, 1.4

1.3.7 Pencils, 1.4

CHAPTER - 2

Lettering and Dimensioning Practices 2.1-2.25

2.1 Introduction. 2.1

2.2 Drawing Sheet, 2.1

2.2.1 Title Block, 2.2

2.2.2 Drawing Sheet Layout (Is 10711 : 2001), 2.3

2.2.3 Folding of Drawing Sheets, 2.3

2.2.4 Lines (IS 10714 (Part 20): 2001 and SP 46: 2003), 2.4

2.3 LETTERING [IS 9609 (PART 0) : 2001 AND SP 46 : 2003], 2.7
2.3.1 Importance of Lettering, 2.7
2.3.2 Single Stroke Letters, 2.7
2.3.3 Types of Single Stroke Letters, 2.7
2.3.4 Size of Letters, 2.8
2.3.5 Procedure for Lettering, 2.8
2.3.6 Dimensioning of Type B Letters, 2.8
2.3.7 Lettering Practice, 2.9
2.4 Dimensioning, 2.12
2.4.1 Principles of Dimensioning, 2.13
2.4.2 Execution of Dimensions, 2.15
2.4.3 Methods of Indicating Dimensions, 2.17
2.4.4 Identification of Shapes, 2.18
2.5 Arrangement of Dimensions, 2.19

CHAPTER - 3

Scales 3.1-3.12

3.1 Introduction, 3.1
3.2 Reducing and Enlarging Scales, 3.1
3.3 Representative Fraction, 3.2
3.4 Types of Scales, 3.2
3.4.1 Plain Scales, 3.2
3.4.2 Diagonal Scales, 3.5
3.4.3 Vernier Scales, 3.9

CHAPTER - 4

Geometrical Constructions 4.1-4.51

4.1 Introduction, 4.1
4.2 Conic Sections 4.12
4.2.1 Circle, 4.13
4.2.2 Ellipse, 4.13
4.2.3 Parabola, 4.13
4.2.4 Hyperbola, 4.13
4.2.5 Conic Sections as Loci of a Moving Point, 4.13

4.3 Special Curves, 4.27
4.3.1 Cycloid, 4.27
4.3.2 Epi-Cycloid and Hypo-Cycloid, 4.28
4.4 Involutes, 4.30

CHAPTER - 5

Orthographic Projections 5.1-5.35

5.1 Introduction, 5.1
5.2 Types of Projections, 5.2
5.2.1 Method of Obtaning, 5.2
5.2.2 Method of Obtaning Top View, 5.2
5.3 First Angle Projectiom, 5.5
5.4 Third Angle Projection, 5.5
5.5 Projection of Points, 5.6
5.6 Projection of Lines, 5.13
5.7 Projection of Planes, 5.19

CHAPTER - 6

Projection of Solids 6.1-6.50

6.1 Introduction, 6.1
6.1.2 Polyhedra, 6.1
6.1.3 Regular of Polyhedra, 6.1
6.2 Prisms, 6.2
6.3 Pyramids, 6.3
6.4 Solids of Revolution, 6.3
6.5 Frustums of Truncated Solids, 6.3
6.6 Prims (Problem) Position of a Solid with Respect to the Reference Planes, 6.4
6.7 Pyramids, 6.17
6.8 Cone and Cylinder, 6.23

6.9 Application of Orthographic Projections, 6.30
6.9.1 Selection of Views, 6.30
6.9.2 Simple Solids, 6.30
6.9.3 Three View Drawings, 6.31
6.9.4 Development of Missiong Views, 6.31
6.10 Types of Auxiliary Views, 6.45

CHAPTER - 7
Development of Surfaces 7.1-7.21
7.1 Introduction, 7.1
7.2 Methods of Development, 7.1
7.2.1 Develop[ment of Prism, 7.2
7.2.2 Development of a Cylinder , 7.2
7.2.3 Development of a square pyramid with side of base 30 mm and height 60 mm, 7.3
7.2.4 Development of a Cone, 7.5

CHAPTER - 8
Intersection of Surfaces 8.1-8.5
8.1 Introduction, 8.1
8.2 Intersection of cylinder and cylinder, 8.1
8.3 Intersection of prism and prism, 8.4

CHAPTER - 9
Isometric Projection 9.1-9.22
9.1 Introduction, 9.1
9.2 Principle of Isometric Projections, 9.1
9.2.1 Lines in Isometric Projection, 9.3
9.2.2 Isometric Projection, 9.3
9.2.3 Isometric Drawing, 9.4
9.2.4 Non-Isometric Lines, 9.6

9.3 Methods of Constructing Isometric Drawing, 9.6
9.3.1 Box Method, 9.7
9.3.2 Off-set Method, 9.7
9.4 Isometric Projection of Planes, 9.7
9.5 Isometric Projection of Prisms, 9.13
9.6 Isometric Projection of Cylinder, 9.15
9.7 Isometric Projection of Pyramid, 9.15
9.8 Isometric Projection of Cone, 9.16
9.9 Isometric Projectin Truncated Cone, 9.17

CHAPTER - 10

Oblique and Persepctive Projections 10.1-10.23

10.1 Introduction, 10.1
10.2 Oblique Projection, 10.1
10.3 Classification of Oblique Projection, 10.2
10.4 Methods of Drawing Oblique Projection 10.2
10.4.1 Choice of Position of the Object, 10.3
10.4.2 Angles, Circles and Curves in Oblique Projection 10.3
10.5 Perspective Projection, 10.5
10.5.1 Nomenclature of Perspective Projection, 10.6
10.5.2 Classification of perspective projections, 10.8
10.5.3 Methods of Perspective Projection, 10.10

CHAPTER - 11

Conversion of Isometric Views to Orthographic Views and Vice Versa 11.1-11.8

11.1 Introduction, 11.1
11.2 Selection of views, 11.1
11.3 Conversion of Orthographic Views to Isometric Views, 11.7

CHAPTER - 12

Sections of Solids 12.1-12.13

12.1 Sectioning of Solids, 12.1
- 12.1.1 Introduction, 12.1
- 12.1.2 Types of Section Views, 12.1
- 12.1.3 Cutting Plane, 12.1

CHAPTER - 13

Freehand Sketching 13.1-13.6

13.1 Introduction, 13.1

CHAPTER - 14

Computer Aided Design and Drawing (CADD) 14.1-14.26

14.1 Introduction, 14.1

14.2 History of CAD, 14.1

14.3 Advantages of CAD, 14.1

14.4 Auto Cad Main Window, 14.2
- 14.4.1 Starting a New Drawing, 14.2
- 14.4.2 Opening an Existing Drawing, 14.3
- 14.4.3 Setting drawing limits, 14.4
- 14.4.4 Erasing Objects, 14.4
- 14.4.5 Saving a Drawing File, 14.4
- 14.4.6 Exiting an AutoCAD Session, 14.4
- 14.5.2 Polar Coordinates, 14.5

14.5 The Coordinate System, 14.5
- 14.5.1 Cartesian Coordinates, 14.5

14.6 The Formats to Enter Coordinates, 14.6
- 14.6.1 User-Defined Coordinate System, 14.6

14.7 Choosing Commands in AutoCAD, 14.8
14.7.1 Pull-down Menus [pd menu] (Fig 14.6), 14.8
14.7.2 Tool Bar Selection, 14.9
14.7.3 Activating Tool Bars, 14.9
14.8 Right Mouse Clicking, 14.10
14.8.1 Right Mouse Click Menus, 14.11
14.9 Object Snaps, 14.12
14.9.1 Types of Object Snaps, 14.12
14.9.2 Running Object Snaps, 14.13
14.9.3 Dividing an Object into Equal Segments, 14.14
14.9.4 Setting off Equal Distances, 14.14
14.9.5 Polyline Command, 14.14
14.9.6 Ray Command, 14.15
14.9.7 Rectangle Command, 14.15
14.9.8 Arc Command, 14.15
14.9.9 Circle Command, 14.18
14.9.10 Ellipse Command, 14.19
14.10 The Drawing Tools of CADD, 14.20
14.10.1 Using Line Types, 14.20
14.10.2 Drawing Multiple Parallel Lines, 14.21
14.10.3 Drawing Flexible Curves, 14.21
14.10.4 Drawing Ellipses and Elliptical Arcs, 14.22

Worksheets **1-40**
Annexure **1-1**
Objective Type Questions **1-7**
Answers **1-2**
Model Question Papers **1-12**

"This page is Intentionally Left Blank"

CHAPTER 1

Drawing Instruments and Accessories

1.1 Introduction

Engineering drawing is a two dimensional representation of three dimensional objects. In general, it provides necessary information about the shape, size, surface quality, material, manufacturing process, etc., of the object. It is the graphic language from which a trained person can visualise objects.

Drawings prepared in one country may be utilised in any other country irrespective of the language spoken. Hence, engineering drawing is called the universal language of engineers. Any language to be communicative, should follow certain rules so that it conveys the same meaning to every one. Similarly, drawing practice must follow certain rules, if it is to serve as a means of communication. For this purpose, Bureau of Indian Standards (BIS) adapted the International Standards on code of practice for drawing. The other foreign standards are : DIN of Germany, BS of Britain and ANSI of America.

1.2 Role of Engineering Drawing

The ability to read drawing is the most important requirement of all technical people in any profession. As compared to verbal or written description, this method is brief and more clear. Some of the applications are : building drawing for civil engineers, machine drawing for mechanical engineers, circuit diagrams for electrical and electronics engineers, computer graphics for one and all.

The subject in general is designed to impart the following skills.

1. Ability to read and prepare engineering drawings.
2. Ability to make free – hand sketching of objects.
3. Power to imagine, analyse and communicate, and
4. Capacity to understand other subjects.

1.3 Drawing Instrument and Aids

The Instruments and other aids used in draughting work are listed below :

1. Drawing board
2. Mini draughter
3. Instrument box
4. Set squares
5. Protractor
6. Set of scales
7. French curves
8. Drawing sheets
9. Pencils
10. Templates

1.3.1 Drawing Board

Until recently drawing boards used are made of well seasoned softwood of about 25 mm thick with a working edge for T-square. Now a days mini-draughters are used instead of T-squares which can be fixed on any board. The standard size of board depends on the size of drawing sheet size required.

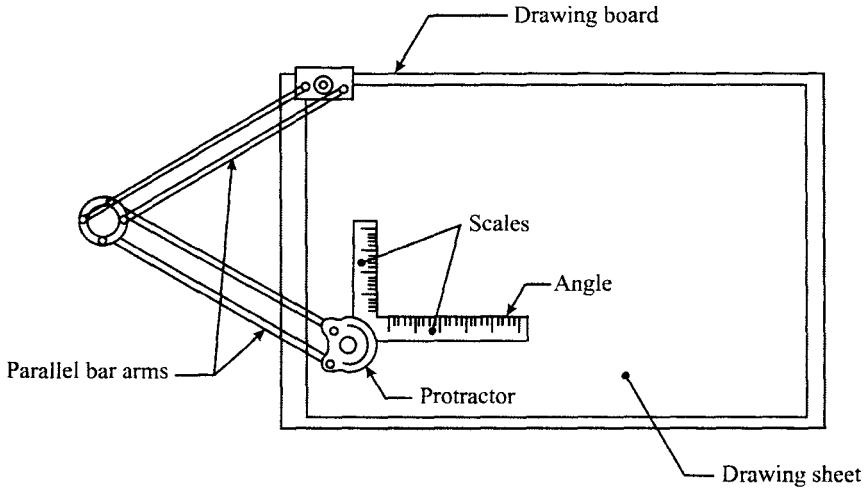

Fig. 1.1 Mini-draughter

1.3.2 Mini-Draughter

Mini-draughter consists of an angle formed by two arms with scales marked and rigidly hinged to each other (Fig.1.1). It combines the functions of T-square, set-squares, scales and protractor. It is used for drawing horizontal, vertical and inclined lines, parallel and perpendicular lines and for measuring lines and angles.

1.3.3 Instrument Box

Instrument box contains 1. Compasses, 2. Dividers and 3. Inking pens. What is important is the position of the pencil lead with respect to the tip of the compass. It should be atleast 1 mm above as shown in Fig.1.2 because the tip goes into the board for grip by 1 mm.

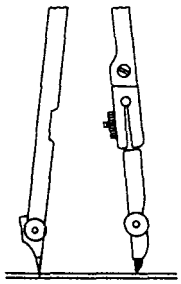

(a) Sharpening and position of compass lead

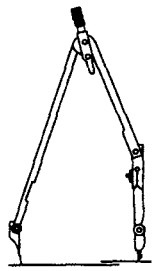

(b) Position of the lead leg to draw larger circles

Fig. 1.2

1.3.4 Set of Scales

Scales are used to make drawing of the objects to proportionate size desired. These are made of wood, steel or plastic (Fig.1.3). BIS recommends eight set-scales in plastic/cardboard with designations M1, M2 and so on as shown in Table 1.1 Set of scales

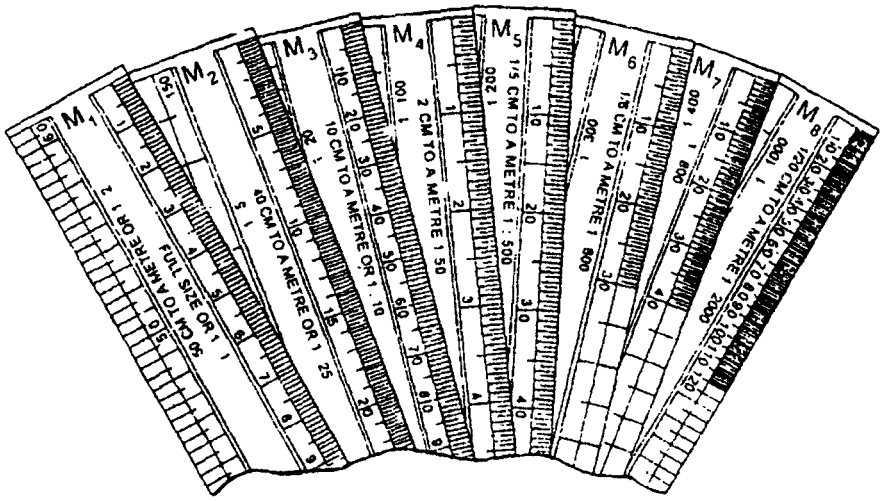

Fig. 1.3 Set of scales

Table 1.1 Set of Scales

	M1	M2	M3	M4	M5	M6	M7	M8
Scale on one edge	1:1	1:2.5	1:10	1:50	1:200	1:300	1:400	1:1000
Scale on other edge	1:2	1:5	1:20	1:100	1:500	1.600	1:800	1:2000

Note : Do not use the scales as a straight edge for drawing straight lines.

These are used for drawing irregular curved lines, other than circles or arcs of circles.

Table 1.2

Scales for use on technical drawings (IS : 46-1988)			
Category	**Recommended scales**		
Enlargement scales	50 : 1 5 : 1	20 : 1 2 : 1	10 : 1
Full size	1 : 1		
Reduction scales	1 : 2 1 : 20 1 : 200 1 . 2000	1 : 5 1 : 50 1 : 500 1 · 5000	1 : 10 1 : 100 1 . 1000 1 10000

1.3.5 French Curves

French curves are available in different shapes (Fig.1.4). First a series of points are plotted along the desired path and then the most suitable curve is made along the edge of the curve. A flexible curve consists of a lead bar inside rubber which bends conveniently to draw a smooth curve through any set of points.

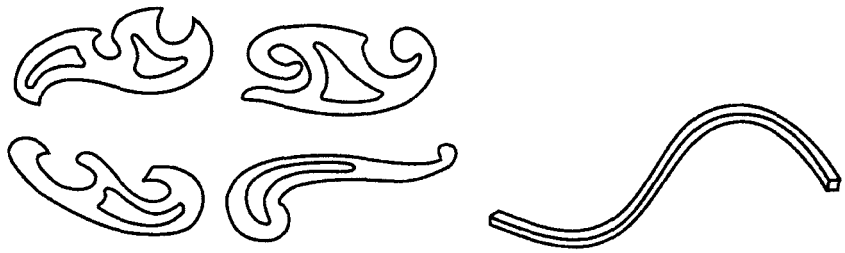

(a) French curves (b) Flexible curve

Fig. 1.4

1.3.6 Templates

These are aids used for drawing small features such as circles, arcs, triangular, square and other shapes and symbols used in various science and engineering fields (Fig.1.5).

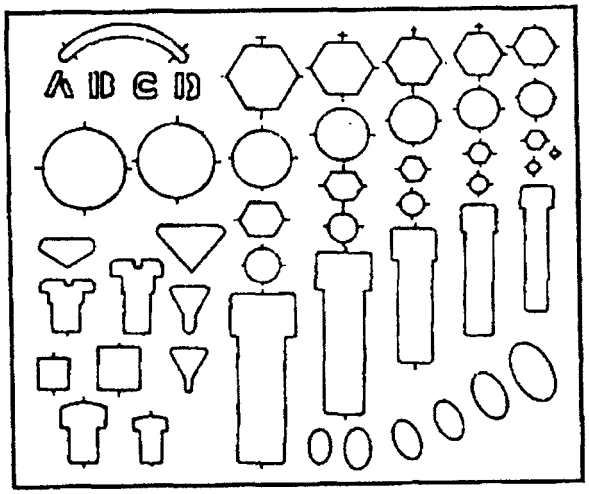

Fig. 1.5 Template

1.3.7 Pencils

Pencils with leads of different degrees of hardness or grades are available in the market. The hardness or softness of the lead is indicated by 3H, 2H, H, HB, B, 2B, 3B, etc. The grade HB denotes medium hardness of lead used for general purpose. The hardness increases as the value of

the numeral before the letter H increases. The lead becomes softer, as the value of the numeral before B increases (Fig.1.6).

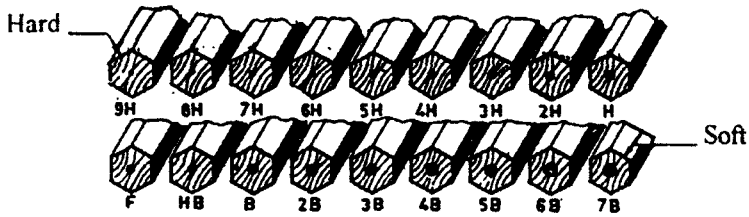

Fig. 1.6 Pencil Leads

The selection of the grade depends on the line quality desired for the drawing. Pencils of grades H or 2H may be used for finishing a pencil drawing as these give a sharp black line. Softer grade pencils are used for sketching work. HB grade is recommended for lettering and dimensioning.

Now a days mechanical pencils are widely used in place of wooden pencils. When these are used, much of the sharpening time can be saved. The number 0.5, 0.70 of the pen indicates the thickness of the line obtained with the lead and the size of the lead diameter.

Micro-tip pencils with 0.5 mm thick leads with the following grades are recommended.

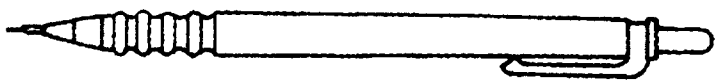

Fig. 1.7 Mechanical Pencil

HB Soft grade for Border lines, lettering and free sketching

H Medium grade for Visible outlines, visible edges and boundary lines

2H Hard grade for construction lines, Dimension lines, Leader lines, Extension lines, Centre lines, Hatching lines and Hidden lines.

CHAPTER 2

Lettering and Dimensioning Practices

(As per BIS : SP : 46 : 2003)

2.1 Introduction

Engineering drawings are prepared on standard size drawing sheets. The correct shape and size of the object can be visualised from the understanding of not only its views but also from the various types of lines used, dimensions, notes, scale etc. For uniformity, the drawings must be drawn as per certain standard practice. This chapter deals with the drawing practices as recommended by Bureau of Indian Standards (BIS) SP: 46:2003. These are adapted from what is followed by International Standards Organisation (ISO).

2.2 Drawing Sheet

The standard drawing sheet sizes are arrived at on the basic Principal of $x : y = 1 : \sqrt{2}$ and $xy = 1$ where x and y are the sides of the sheet. For example A0, having a surface area of 1 Sq.m; x = 841 mm and y = 1189 mm. The successive sizes are obtained by either by halving along the length or doubling the width, the area being in the ratio 1 : 2. Designation of sizes is given in Fig.2.1 and their sizes are given in Table 2.1. For class work use of A2 size drawing sheet is preferred.

Table 2.1

Designation	Dimension, mm Trimmed size
A0	841 × 1189
A1	594 × 841
A2	420 × 594
A3	297 × 420
A4	210 × 297

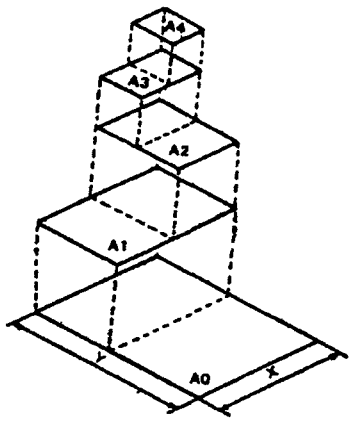

Fig. 2.1 Drawing Sheet Formats

2.2.1 Title Block

The title block should lie within the drawing space at the bottom right hand corner of the sheet. The title block can have a maximum length of 170 mm providing the following information.

1. Title of the drawing.
2. Drawing number.
3. Scale.
4. Symbol denoting the method of projection.
5. Name of the firm, and
6. Initials of staff who have designed, checked and approved.

The title block used on shop floor and one suggested for students class work are shown in Fig.2.2.

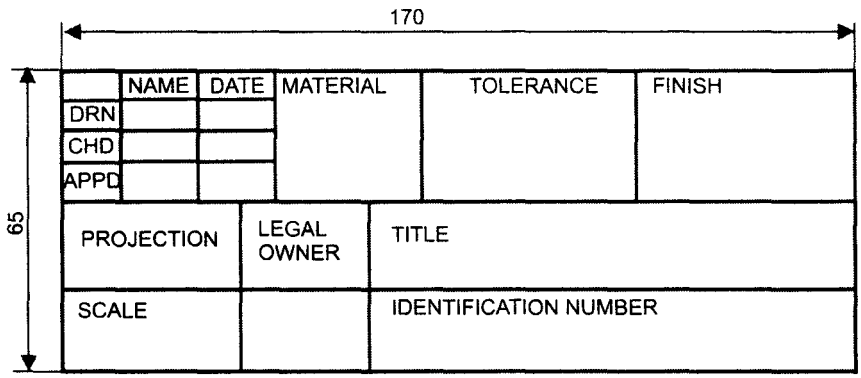

Fig. 2.2(a)

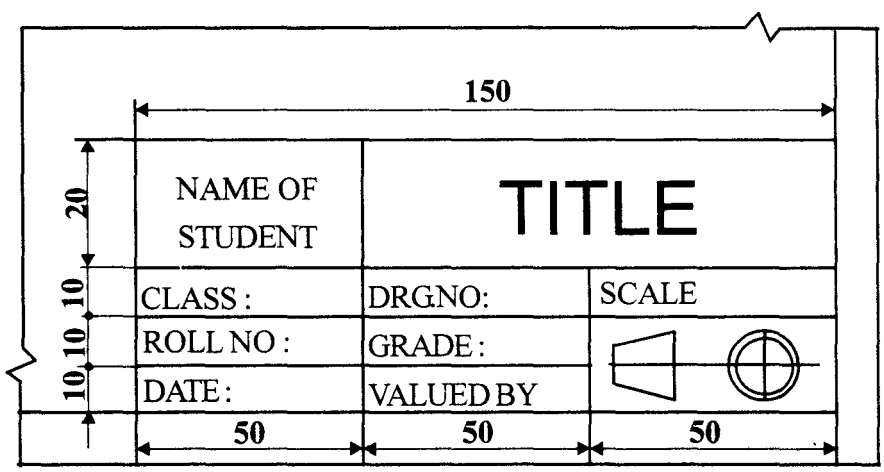

Fig. 2.2(b)

2.2.2 Drawing Sheet Layout (Is 10711 : 2001)

The layout of a drawing sheet used on the shop floor is shown in Fig.2.3a, The layout suggested to students is shown in Fig.2.3b.

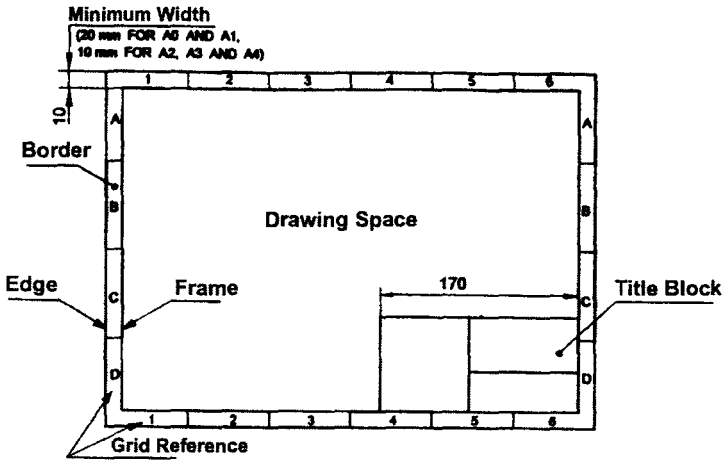

Fig. 2.2 (a) General features of a drawing sheet

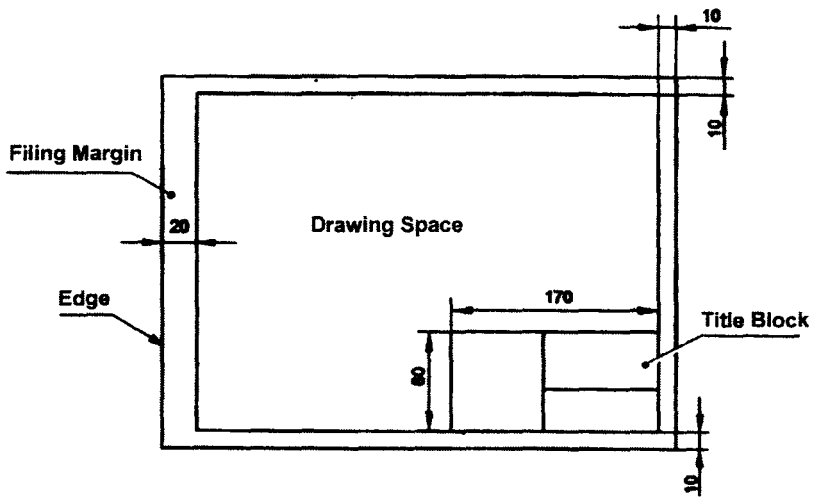

Fig. 2.3 (b) Layout of sheet for class work

2.2.3 Folding of Drawing Sheets

IS : 11664 – 1999 specifies the method of folding drawing sheets. Two methods of folding of drawing sheets, one suitable for filing or binding and the other method for keeping in filing cabinets are specified by BIS. In both the methods of folding, the Title Block is always visible.

2.4. Shows the method in which drawing sheets may be unfolded and refolded, without the necessity of removal from the file.

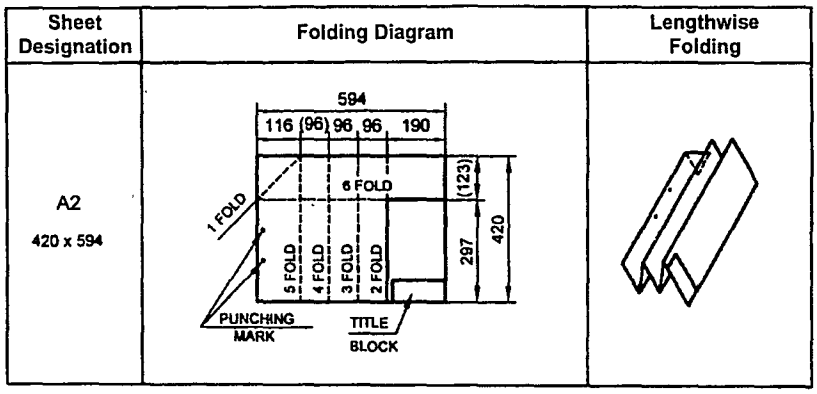

Fig. 2.4(a) Folding of drawing sheet for filing or binding

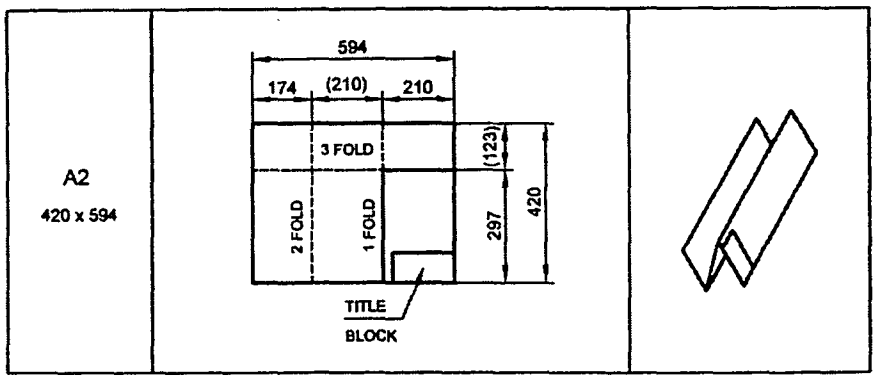

Fig. 2.4(b) Folding of drawing sheet for storing in filing cabinet

2.2.4 Lines (IS 10714 (Part 20): 2001 and SP 46: 2003)

Just as in English textbook the correct words are used for making correct sentences; in Engineering Graphics, the details of various objects are drawn by different types of lines. Each line has a definite meaning and sense to convey.

IS 10714 (Part 20) : 2001 (General principles of presentation on technical drawings) and SP 46:2003 specify the following types of lines and their applications:

- **Visible Outlines, Visible Edges :** Type 01.2 **(Continuous wide lines)** The lines drawn to represent the visible outlines/ visible edges / surface boundary lines of objects should be outstanding in appearance.
- **Dimension Lines :** Type 01.1 **(Continuous narrow Lines)** Dimension Lines are drawn to mark dimension.
- **Extension Lines :** Type 01.1 **(Continuous narrow Lines)**
- There are extended slightly beyond the respective dimension lines.

- **Construction Lines:** Type 01.1 **(Continuous narrow Lines)**
  Construction Lines are drawn for constructing drawings and should not be erased after completion of the drawing.
- **Hatching / Section Lines :** Type 01.1 **(Continuous Narrow Lines)**
  Hatching Lines are drawn for the sectioned portion of an object. These are drawn inclined at an angle of 45° to the axis or to the main outline of the section.
- **Guide Lines :** Type 01.1 **(Continuous Narrow Lines)**
  Guide Lines are drawn for lettering and should not be erased after lettering.
- **Break Lines :** Type 01.1 **(Continuous Narrow Freehand Lines)**
  Wavy continuous narrow line drawn freehand is used to represent break of an object.
- **Break Lines :** Type 01.1 **(Continuous Narrow Lines With Zigzags)**
  Straight continuous narrow line with zigzags is used to represent break of an object.
- **Dashed Narrow Lines :** Type 02.1 **(Dashed Narrow Lines)**
  Hidden edges / Hidden outlines of objects are shown by dashed lines of short dashes of equal lengths of about 3 mm, spaced at equal distances of about 1 mm. the points of intersection of these lines with the outlines / another hidden line should be clearly shown.
- **Center Lines :** Type 04.1 **(Long-Dashed Dotted Narrow Lines)**
  Center Lines are drawn at the center of the drawings symmetrical about an axis or both the axes. These are extended by a short distance beyond the outline of the drawing.
- **Cutting Plane Lines :** Type 04.1 and Type 04.2
  Cutting Plane Line is drawn to show the location of a cutting plane. It is long-dashed dotted narrow line, made wide at the ends, bends and change of direction. The direction of viewing is shown by means of arrows resting on the cutting plane line.
- **Border Lines**
  Border Lines are continuous wide lines of minimum thickness 0.7 mm

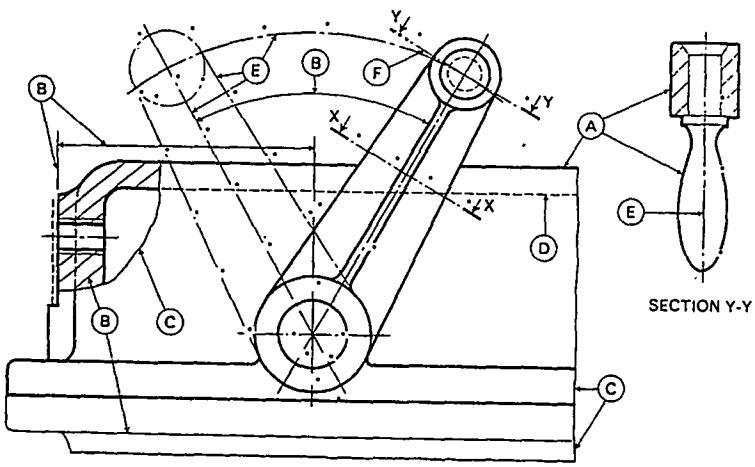

Fig. 2.5 Types of Lines

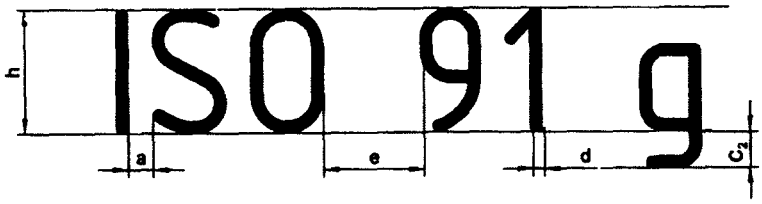

Fig. 2.6

Understanding the various types of lines used in drawing (i.e.,) their thickness, style of construction and appearance as per BIS and following them meticulously may be considered as the foundation of good drawing skills. Table 2.2 shows various types of lines with the recommended applications.

Table 2.2 Types of Lines and their applications (IS 10714 (Part 20) : 2001) and BIS: SP46 : 2003.

No.	Line description and Representation	Applications
01.1	Continuous narrow line B	Dimension lines, Extension lines
		Leader lines, Reference lines
		Short centre lines
		Projection lines
		Hatching
		Construction lines, Guide lines
		Outlines of revolved sections
		Imaginary lines of intersection
01.1	Continuous narrow freehand line C	Preferably manually represented termination of partial or interrupted views, cuts and sections, if the limit is not a line of symmetry or a center line [a].
01.1	Continuous narrow line with zigzags A	Preferably mechanically represented termination of partial or interrupted views, cuts and sections, if the limit is not a line of symmetry or a center line[a].
01.2	Continuous wide line	Visible edges, visible outlines
		Main representations in diagrams, maps, flow charts
02.1	Dashed narrow line D	Hidden edges
		Hidden outlines
04.1	Long-dashed dotted narrow line E	Center lines / Axes, Lines of symmetry
		Cutting planes (Line 04.2 at ends and changes of direction)
04.2	Long-dashed dotted wide line F	Cutting planes at the ends and changes of direction outlines of visible parts situated in front of cutting plane

Line widths (IS 10714 : 2001)

Line width means line thickness.

Choose line widths according to the size of the drawing from the following range : **0.13, 0.18, 0.25, 0.35, 0.5, 0.7 and 1 mm.**

BIS recommends two line widths on a drawing. Ratio between the thin and thick lines on a drawing shall not be less than **1 : 2.**

Precedence of Lines

1. When a Visible Line coincide with a Hidden Line or Center Line, draw the Visible Line. Also, extend the Center Line beyond the outlines of the view.
2. When a Hidden Line coincides with a Center Line, draw the Hidden Line.
3. When a Visible Line coincides with a Cutting Plane, draw the Visible Line.
4. When a Center line coincides with a Cutting Plane, draw the Center Line and show the Cutting Plane line outside the outlines of the view at the ends of the Center Line by thick dashes.

2.3 LETTERING [IS 9609 (PART 0) : 2001 AND SP 46 : 2003]

Lettering is defined as writing of titles, sub-titles, dimensions, etc., on a drawing.

2.3.1 Importance of Lettering

To undertake production work of an engineering components as per the drawing, the size and other details are indicated on the drawing. This is done in the form of notes and dimensions.

Main Features of Lettering are legibility, uniformity and rapidity of execution. Use of drawing instruments for lettering consumes more time. **Lettering should be done freehand with speed.**

Practice accompanied by continuous efforts would improve the lettering skill and style. Poor lettering mars the appearance of an otherwise good drawing.

BIS and ISO Conventions

IS 9609 (Part 0) : 2001 and SP 46 : 2003 (Lettering for technical drawings) specify lettering in technical product documentation. This BIS standard is based on ISO 3098-0 : 1997.

2.3.2 Single Stroke Letters

The word single-stroke should not be taken to mean that the lettering should be made in one stroke without lifting the pencil. It means that the thickness of the letter should be uniform as if it is obtained in one stroke of the pencil.

2.3.3 Types of Single Stroke Letters

1. Lettering Type A : (i) Vertical and (ii) Sloped (at 75° to the horizontal)
2. Lettering Type B : (i) Vertical and (ii) Sloped (at 75° to the horizontal)

Type B Preferred

In Type A, height of the capital letter is divided into 14 equal parts, while in Type B, height of the capital letter is divided into 10 equal parts. Type B is preferred for easy and fast execution, because of the division of height into 10 equal parts.

Vertical Letters Preferred

Vertical letters are preferred for easy and fast execution, instead of sloped letters.

Note : Lettering in drawing should be in CAPITALS (i.e., Upper-case letters).

Lower-case (small) letters are used for abbreviations like mm, cm, etc.

2.3.4 Size of Letters

- Size of Letters is measured by the height **h** of the CAPITAL letters as well as numerals.
- Standard heights for CAPITAL letters and numerals recommended by BIS are given below :

  1.8, 2.5, 3.5, 5, 6, 10, 14 and **20 mm**

  Note: Size of the letters may be selected based upon the size of drawing.

Guide Lines

In order to obtain correct and uniform height of letters and numerals, guide lines are drawn, using 2H pencil with light pressure. HB grade conical end pencil is used for lettering.

2.3.5 Procedure for Lettering

1. Thin horizontal guide lines are drawn first at a distance '**h**' apart.
2. *Lettering Technique* : Horizontal lines of the letters are drawn from left to right. Vertical, inclined and curved lines are drawn from top to bottom.
3. After lettering has been completed, the guidelines are not erased.

2.3.6 Dimensioning of Type B Letters (Figs 2.5 and 2.6)

BIS denotes the characteristics of lettering as :

h (height of capital letters),

c_1 (height of lower-case letters),

c_2 (tail of lower-case letters),

c_3 (stem of lower-case letters),

a (spacing between characters),

b_1 & b_2 (spacing between baselines),

e (spacing between words) and

d (line thickness),

Table 2.3 Lettering Proportions

Recommended Size (height h) of Letters / Numerals	
Main Title	**5 mm, 7 mm, 10 mm**
Sub-Titles	**3.5 mm, 5 mm**
Dimensions, Notes, etc.	**2.5 mm, 3.5 mm, 5 mm**

2.3.7 Lettering practice

Practice of lettering capital and lower case letters and numerals of type B are shown in Figs.2.7 and 2.8.

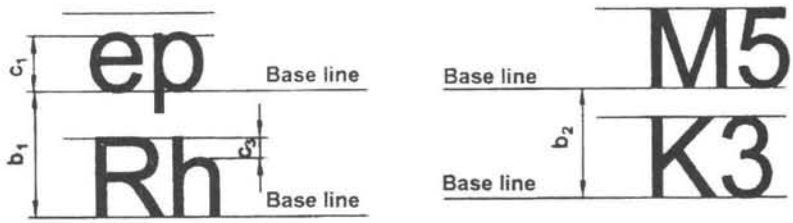

Fig. 2.7 Lettering

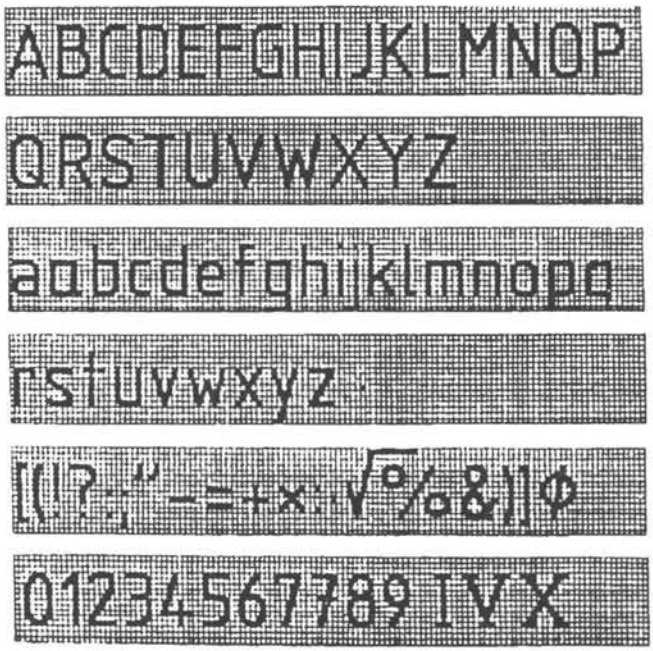

Fig. 2.8 Vertical Lettering

The following are some of the guide lines for lettering (Fig 2.9 & 2.10)

1. Drawing numbers, title block and letters denoting cutting planes, sections are written in 10 mm size.
2. Drawing title is written in 7 mm size.
3. Hatching, sub-titles, materials, dimensions, notes, etc., are written in 3.5 mm size.
4. Space between lines = ¾ h.
5. Space between words may be equal to the width of alphabet M or 3/5 h.

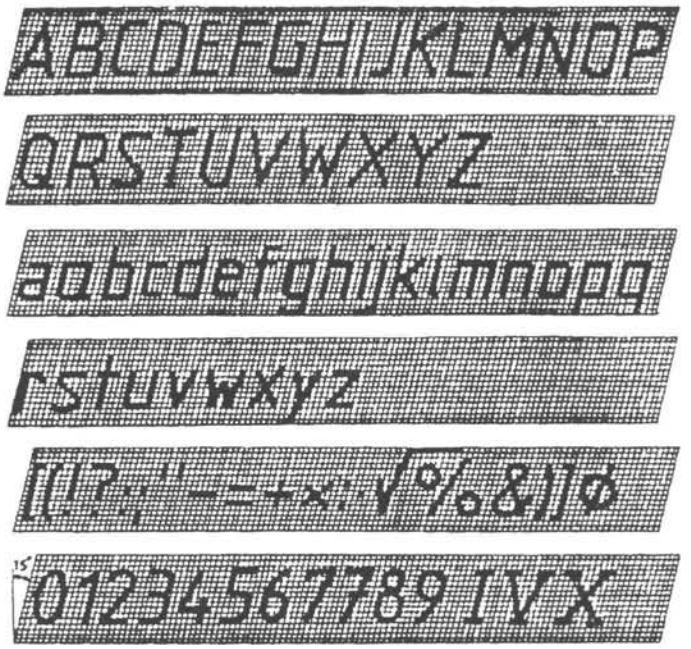

Fig. 2.9 Inclined Lettering

6. Space between letters should be approximately equal to 1/5 h. Poor spacing will affect the visual effect.
7. The spacing between two characters may be reduced by half if this gives a better visual effect, as for example LA, TV; over lapped in case of say LT, TA etc, and the space is increased for letters with adjoining stems.

CAPITAL Letters

- Ratio of height to width for most of the CAPITAL letters is approximately = 10:6
- However, for **M** and **W**, the ratio = **10:8** for I the ratio = **10:2**

Lower-case Letters

- Height of lower-case letters *with* stem / tail (b, d, f, g, h, j, k, l, p, q, t, y) = $c_2 = c_3 =$ **h**
- Ratio of height to width for lower-case letters *with* stem or tail = **10:5**
- Height of lower-case letters *without* stem or tail c_1 is approximately = **(7/10) h**
- Ratio of height to width for most lower-case letters *without* stem or tail = **7 : 5**
- However, for **m** and **w**, the ratio = **7 : 7**. For **I** and **l**, the ratio = **10:2**

Numerals

- For numerals **0 to 9**, the ratio of height to width = **10 : 5**. For l, ratio = **10 : 2**

Spacing

- Spacing between characters = **a = (2/10)h**
- Spacing between words = **e = (6/10)h**

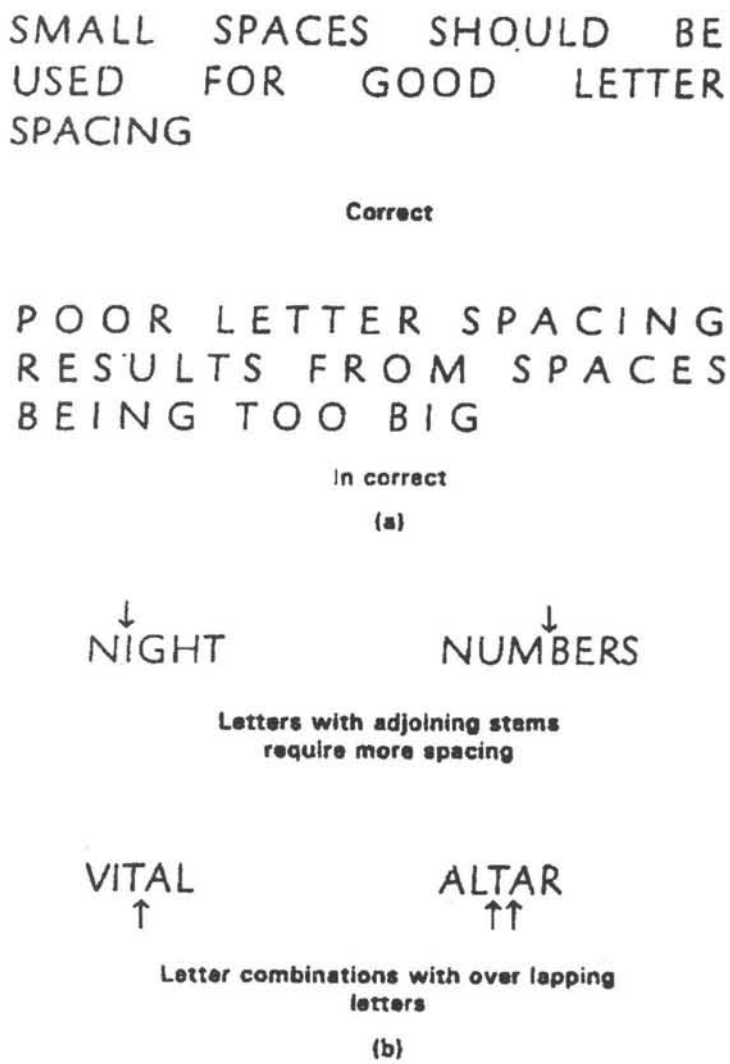

Fig. 2.10 Guide lines for lettering

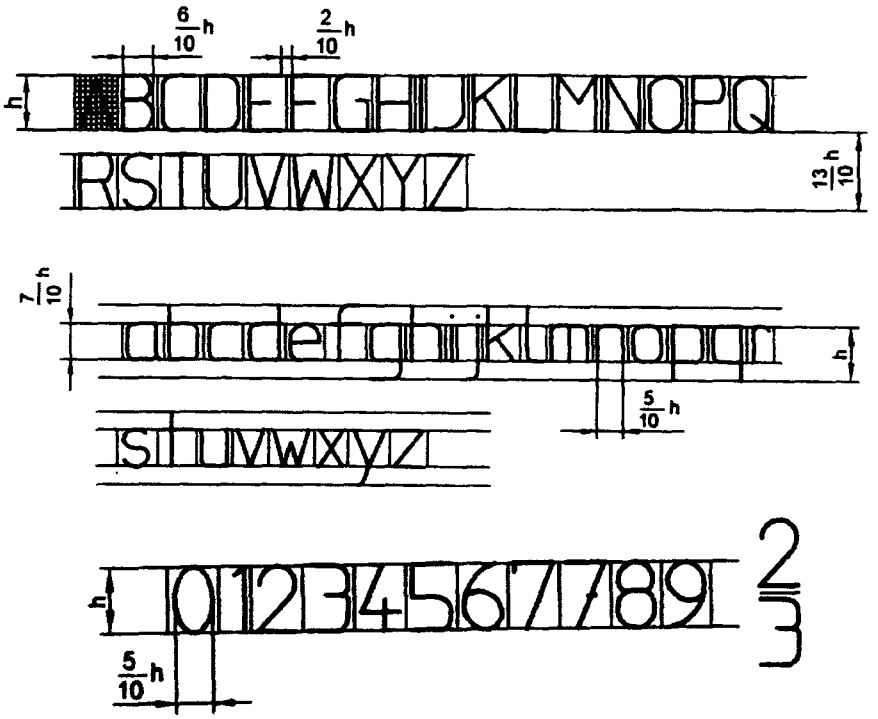

Fig. 2.11 Vertical capital & Lowercase letters and numerals of type B

EXAMPLE IN LETTERING PRACTICE

Write freehand the following, using single stroke vertical CAPITAL letters of 5 mm (h) size

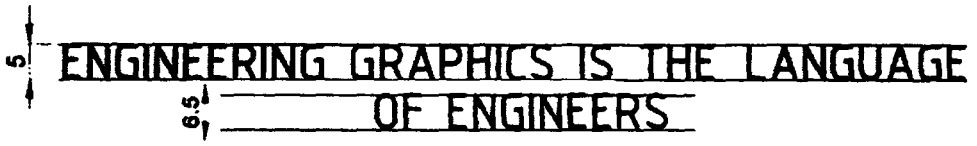

Fig. 2.12

2.4 Dimensioning

Drawing of a compo1nent, in addition to prividing complete shape description, must also furnish information regarding the size description. These are provided through the distances between the surfaces, location of holes, nature of surface finish, type of material, etc. The expression of these features on a drawing, using lines, symbols, figures and notes is called dimensioning.

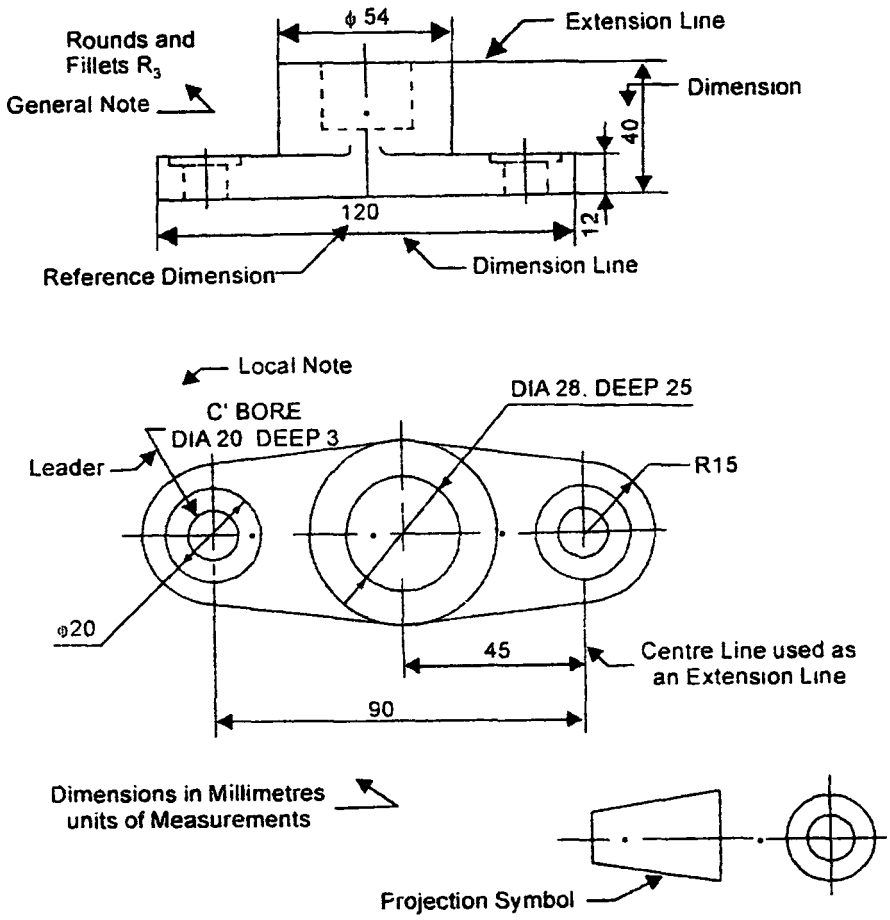

Fig.2.13 Elements of Dimensioning

2.4.1 Principles of Dimensioning

Some of the basic principles of dimensioning are given below.

1. All dimensional information necessary to describe a component clearly and completely shall be written directly on a drawing.
2. Each feature shall be dimensioned once only on a drawing, i.e., dimension marked in one view need not be repeated in another view.
3. Dimension should be placed on the view where the shape is best seen (Fig.2.14)
4. As far as possible, dimensions should be expressed in one unit only preferably in millimeters, without showing the unit symbol (mm).
5. As far as possible dimensions should be placed outside the view (Fig.2.15).
6. Dimensions should be taken from visible outlines rather than from hidden lines (Fig.2.16).

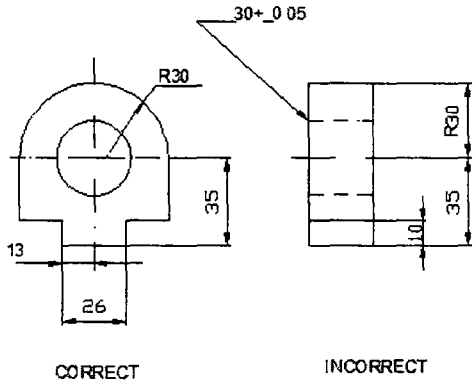

Fig. 2.14 Placing the Dimensions where the Shape is Best Shown

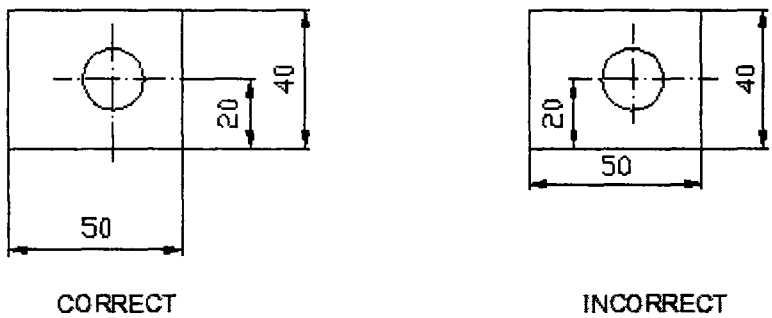

Fig. 2.15 Placing Dimensions Outside the View

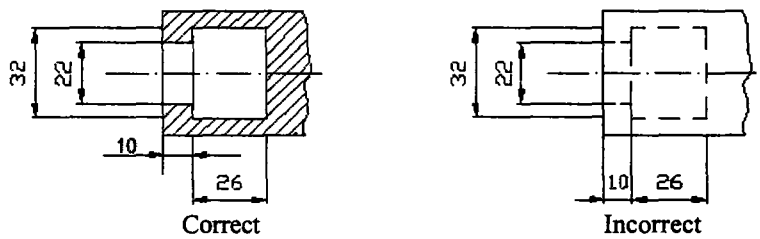

Fig. 2.16 Marking the dimensions from the visible outlines

7. No gap should be left between the feature and the start of the extension line (Fig.2.17).
8. Crossing of centre lines should be done by a long dash and not a short dash (Fig.2.18).

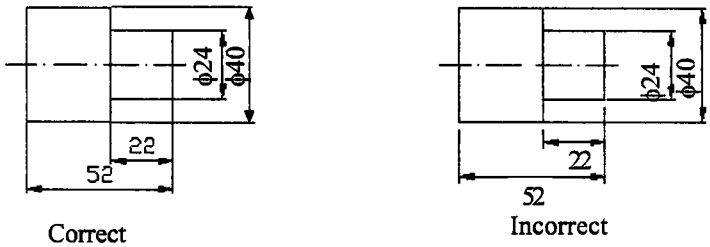

Fig. 2.17 Marking of Extension Lines

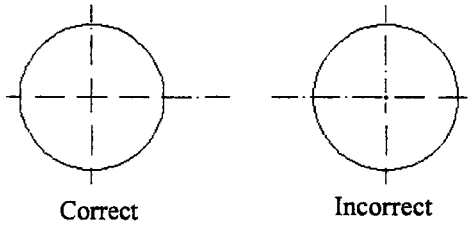

Fig. 2.18 Crossing of Centre Lines

2.4.2 Execution of Dimensions

1. Prejection and dimension lines should be drawn as thin continuous lines. projection lines should extend slightly beyond the respective dimension line. Projection lines should be drawn perpendicular to the feature being dimensioned. If the space for dimensioning is insufficient, the arrow heads may be reversed and the adjacent arrow heads may be replaced by a dot (Fig.2.19). However, they may be drawn obliquely, but parallel to each other in special cases, such as on tapered feature (Fig.2.20).

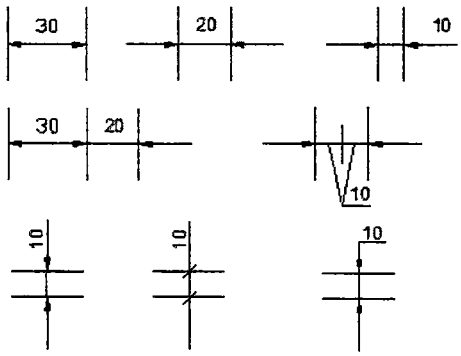

Fig. 2.19 Dimensioning in Narrow Spaces

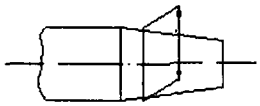

Fig. 2.20 Dimensioning a Tapered Feature

2. A leader line is a line referring to a feature (object, outline, dimension). Leader lines should be inclined to the horizontal at an angle greater than 30°. Leader line should terminate,
   (a) with a dot, if they end within the outline of an object (Fig.2.21a).
   (b) with an arrow head, if they end on outside of the object (Fig.2.21b).
   (c) without a dot or arrow head, if they end on dimension line (Fig.2.21c).

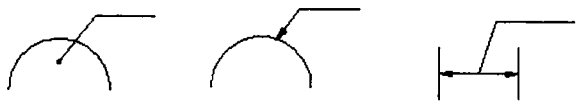

(a) (b) (c)

Fig. 2.21 Termination of leader lines

Dimension Termination and Origin Indication

Dimension lines should show distinct termination in the form of arrow heads or oblique strokes or where applicable an origin indication (Fig.2.22). The arrow head included angle is 15°. The origin indication is drawn as a small open circle of approximately 3 mm in diameter. The proportion lenght to depth 3 : 1 of arrow head is shown in Fig.2.23.

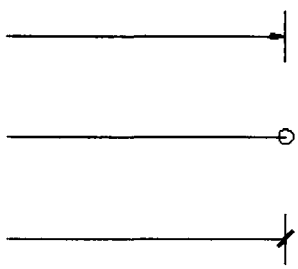

Fig. 2.22 Termination of Dimension Line

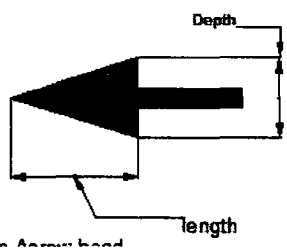

Fig. 2.23 Proportions of an Arrow Head

When a radius is dimensioned only one arrow head, with its point on the arc end of the dimension line should be used (Fig.2.24). The arrow head termination may be either on the inside or outside of the feature outline, depending on the size of the feature.

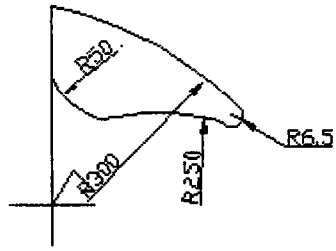

Fig. 2.24 Dimensioning of Radii

2.4.3 Methods of Indicating Dimensions

The dimensions are indicated on the drawings according to one of the following two methods.

Method - 1 (Aligned method)

Dimensions should be placed parallel to and above their dimension lines and preferably at the middle, and clear of the line. (Fig.2.25).

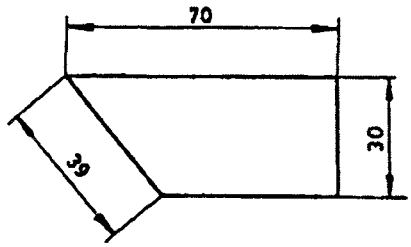

Fig. 2.25 Aligned Method

Dimensions may be written so that they can be read from the bottom or from the right side of the drawing. Dinensions on oblique dimension lines should be oriented as shown in Fig.2.26a and except where unavoidable, they shall not be placed in the 30° zone. Angular dimensions are oriented as shown in Fig.2.26b

Method - 2 (uni-directional method)

Dimensions should be indicated so that they can be read from the bottom of the drawing only.

Non-horizontal dimension lines are interrupted, preferably in the middle for insertion of the dimension (Fig.2.27a).

Angular dimensions may be oriented as in Fig.2.27b

Note : Horizontal dimensional lines are not broken to place the dimension in both cases.

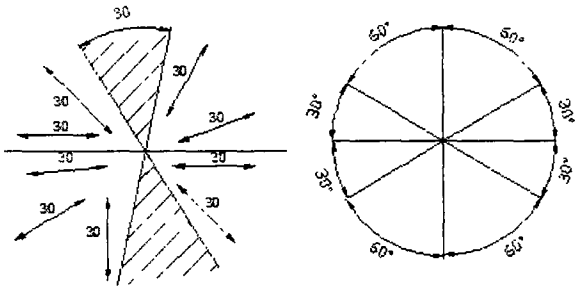
30
30
30

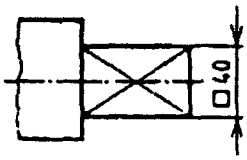

Fig. 2.30

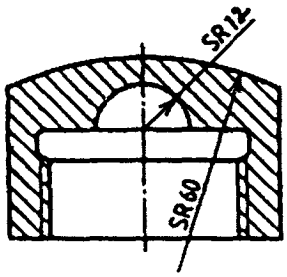

Fig. 2.31

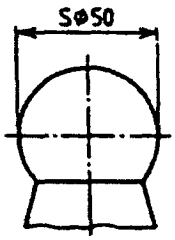

Fig. 2.32

2.5 Arrangement of Dimensions

The arrangement of dimensions on a drawing must indicate clearly the purpose of the design of the object. They are arranged in three ways.

1. Chain dimensioning
2. Parallel dimensioning
3. Combined dimensioning.

1. Chain dimensioning

Chain of single dimensioning should be used only where the possible accumulation of tolerances does not endanger the fundamental requirement of the component (Fig.2.33)

2. Parallel dimensioning

In parallel dimensioning, a number of dimension lines parallel to one another and spaced out, are used. This method is used where a number of dimensions have a common datum feature (Fig.2.34).

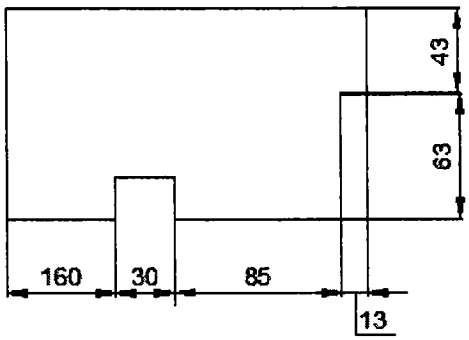

Fig. 2.33 Chain Dimensioning

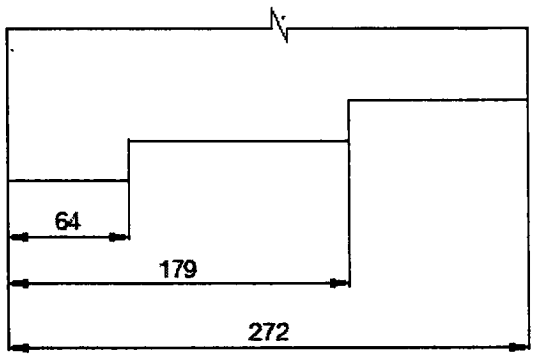

Fig. 2.34 Parallel Dimensioning

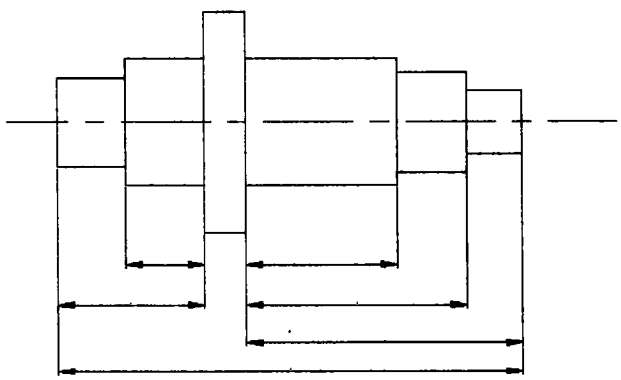

Fig. 2.35 Combined Dimensioning

Violation of some of the principles of drawing are indicated in Fig.2.36a. The corrected version of the same as per BIS SP 46-2003 is given is Fig.2.36b. The violations from 1 to 16 indicated in the figure are explained below.

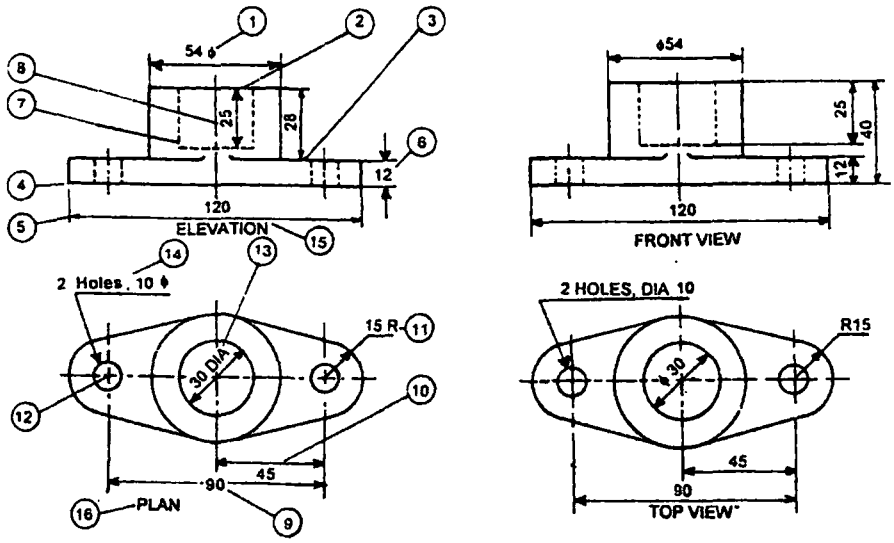

(a) (b)

Fig. 2.36

1. Dimension should follow the shape symbol.
2. and 3. As far as possible, features should not be used as extension lines for dimensioning.
4. Extension line should touch the feature.
5. Extension line should project beyond the dimension line.
6. Writing the dimension is not as per aligned method.
7. Hidden lines should meet without a gap.
8. Centre line representation is wrong. Dots should be replaced by small dashes.
9. Horizontal dimension line should not be broken to insert the value of dimension in both aligned and uni-direction methods.
10. Dimension should be placed above the dimension line.
11. Radius symbol should precede the dimension.
12. Centre line should cross with long dashes not short dashes.
13. Dimension should be written by symbol followed by its values and not abbreviation.
14. Note with dimensions should be written in capitals.
15. Elevation is not correct usage.
16. Plan is obsolete in graphic language

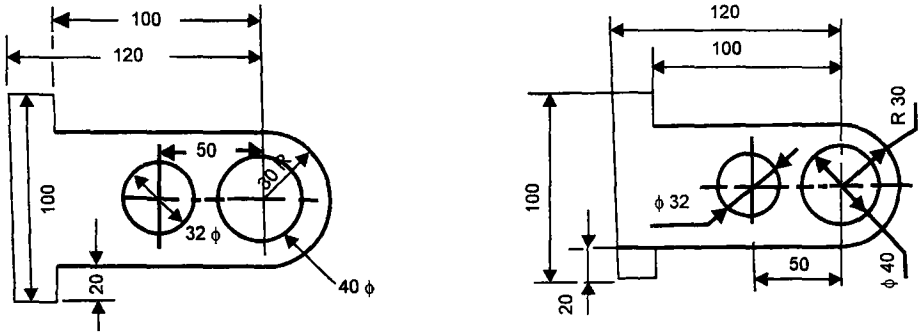

(a) Incorrect

(b) Correct

Fig. 2.37

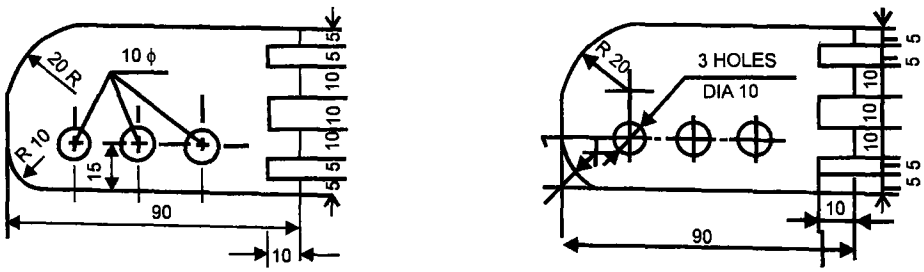

(a) Incorrect

(b) Correct

Fig. 2.38

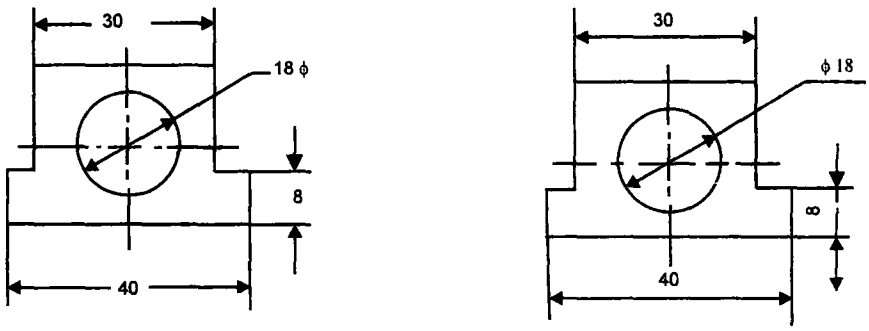

(a) Incorrect

(b) Correct

Fig. 2.39

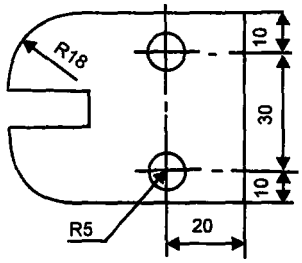

(b) Correct

Fig. 2.40

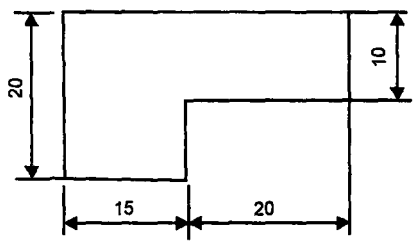

Fig. 2.41

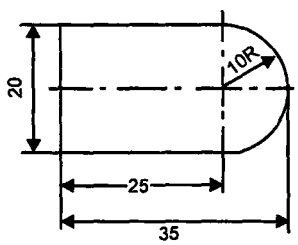

Fig. 2.42

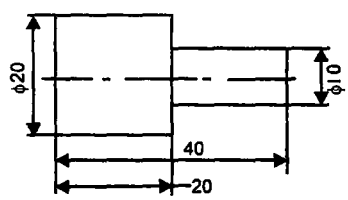

Fig. 2.43

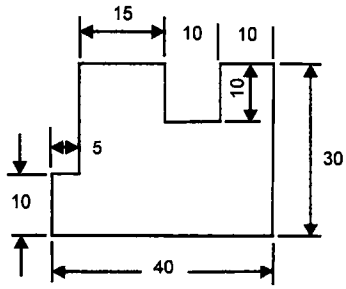

Fig. 2.44

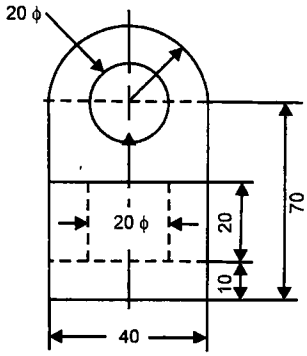

Fig. 2.45

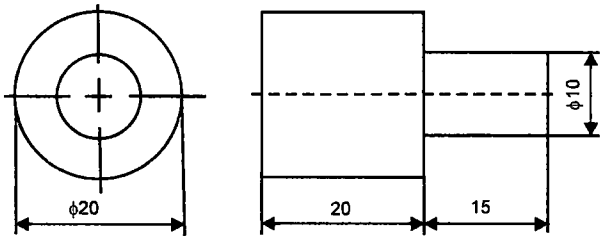

Fig. 2.46

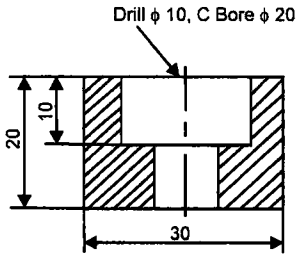

Fig. 2.47

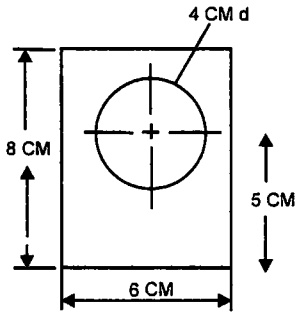

Fig. 2.48

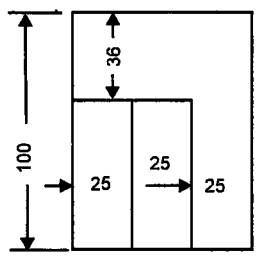

Fig. 2.49

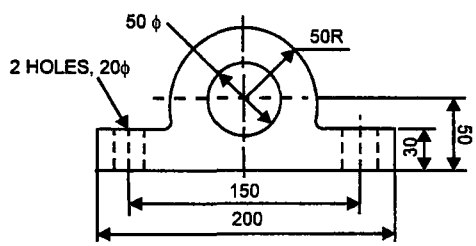

Fig. 2.50

EXERCISE

Write freehand the following, using single stroke vertical (CAPITAL and lower-case) letters:

1. Alphabets (Upper-case & Lower-case) and Numerals 0 to 9 (h = 5 and 7 mm)
2. PRACTICE MAKES A PERSON PERFECT (h = 3.5 and 5)
3. BE A LEADER NOT A FOLLOWER (h = 5)
4. LETTERING SHOULD BE DONE FREEHAND WITH SPEED (h = 5)

CHAPTER 3

Scales

3.1 Introduction

It is not possible always to make drawings of an object to its actual size. If the actual linear dimensions of an object are shown in its drawing, the scale used is said to be a **full size scale.** Wherever possible, it is desirable to make drawings to full size.

3.2 Reducing and Enlarging Scales

Objects which are very big in size can not be represented in drawing to full size. In such cases the object is represented in reduced size by making use of reducing scales. Reducing scales are used to represent objects such as large machine parts, buildings, town plans etc. A reducing scale, say 1:10 means that 10 units length on the object is represented by 1 unit length on the drawing.

Similarly, for drawing small objects such as watch parts, instrument components etc., use of full scale may not be useful to represent the object clearly. In those cases enlarging scales are used. An enlarging scale, say 10:1 means one unit length on the object is represented by 10 units on the drawing.

The designation of a scale consists of the word. SCALE, followed by the indication of its ratio as follows. (Standard scales are shown in Fig. 3.1)

Scale 1:1 for full size scale

Scale 1: x for reducing scales (x = 10,20.....etc.,)

Scale x:1 for enlarging scales.

Note : For all drawings the scale has to be mentioned without fail.

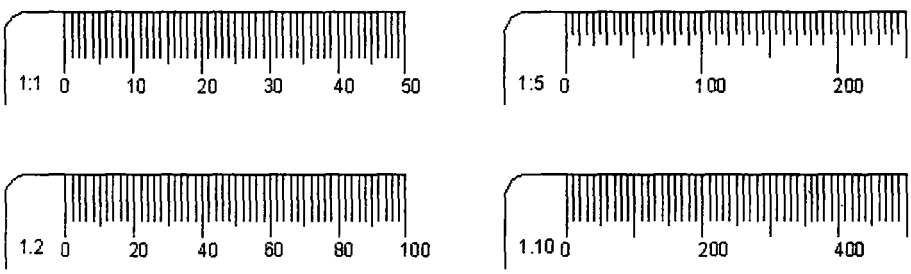

Fig. 3.1 Scales

3.3 Representative Fraction

The ratio of the dimension of the object shown on the drawing to its actual size is called the Representative Fraction (RF).

$$RF = \frac{\text{Drawing size of an object}}{\text{Its actual size}} \text{ (in same units)}$$

For example, if an actual length of 3 metres of an object is represented by a line of 15mm length on the drawing

$$RF = \frac{15\text{mm}}{3\text{m}} = \frac{15\text{mm}}{(3\times1000)\text{mm}} = \frac{1}{200} \text{ or } 1:200$$

If the desired scale is not available in the set of scales it may be constructed and then used.

Metric Measurements

10 millimetres (mm) = 1 centimetre(cm)

10 centimetres (cm) = 1 decimetre(dm)

10 decimetre (dm) = 1 metre(m)

10 metres (m) = 1 decametre (dam)

10 decametre (dam) = 1 hectometre (hm)

10 hectometres (hm) = 1 kilometre (km)

1 hectare = 10,000 m^2

3.4 Types of Scales

The types of scales normally used are:

1. Plain scales.
2. Diagonal Scales.
3. Vernier Scales.

3.4.1 Plain Scales

A plain scale is simply a line which is divided into a suitable number of equal parts, the first of which is further sub-divided into small parts. It is used to represent either two units or a unit and its fraction such as km and hm, m and dm, cm and mm etc.

Problem 1 : *On a survey map the distance between two places 1km apart is 5 cm. Construct the scale to read 4.6 km.*

Solution : (Fig 3.2)

$$RF = \frac{5\text{cm}}{1\times1000\times100\text{cm}} = \frac{1}{20000}$$

If **x** is the drawing size required $x = 5(1000)(100) \times \frac{1}{20000}$

Therefore, x = 25 cm

Note : If 4.6 km itself were to be taken x = 23 cm. To get 1 km divisions this length has to be divided into 4.6 parts which is difficult. Therefore, the nearest round figure 5 km is considered. When this length is divided into 5 equal parts each part will be 1 km.

1. Draw a line of length 25 cm.
2. Divide this into 5 equal parts. Now each part is 1 km.
3. Divide the first part into 10 equal divisions. Each division is 0.1 km.
4. Mark on the scale the required distance 4.6 km.

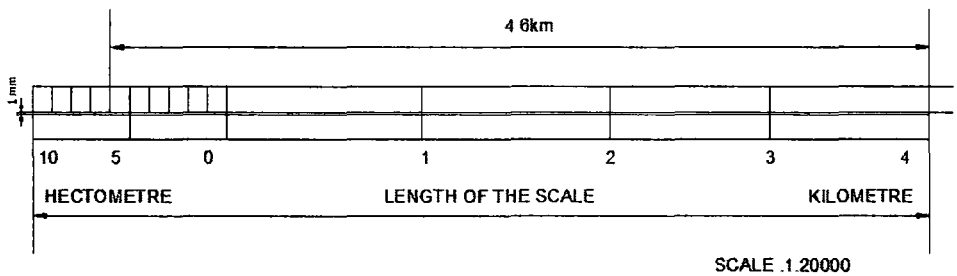

Fig. 3.2 Plain Scale

Problem 2 : *Construct a scale of 1:50 to read metres and decimetres and long enough to measure 6 m. Mark on it a distance of 5.5 m.*

Construction (Fig. 3.3)

1. Obtain the length of the scale as: RF x 6m = $\frac{1}{50} \times 6 \times 100 = 12$ cm
2. Draw a rectangle strip of length 12 cm and width 0.5 cm.
3. Divide the length into 6 equal parts, by geometrical method each part representing 1m.
4. Mark 0(zero) after the first division and continue 1,2,3 etc., to the right of the scale.
5. Divide the first division into 10 equal parts (secondary divisions), each representing 1 cm.
6. Mark the above division points from right to left.
7. Write the units at the bottom of the scale in their respective positions.
8. Indicate RF at the bottom of the figure.
9. Mark the distance 5.5 m as shown.

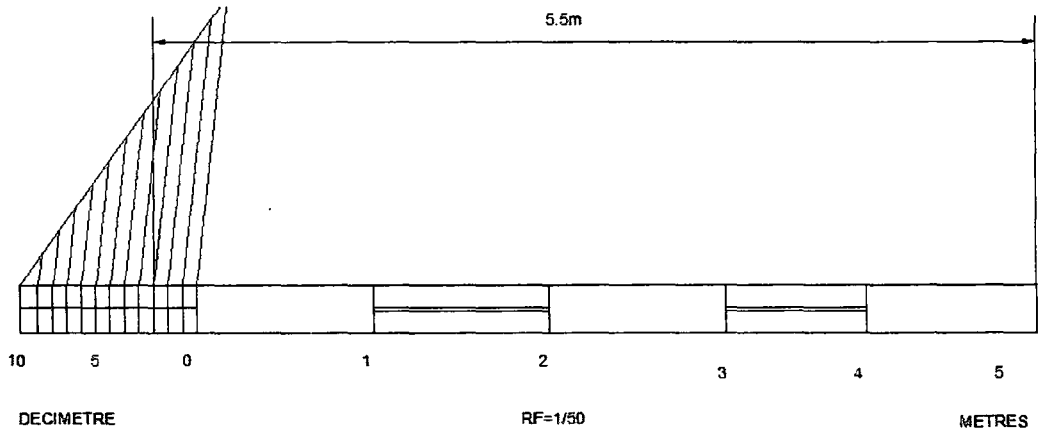

Fig. 3.3

Problem 3 : *The distance between two towns is 250 km and is represented by a line of length 50mm on a map. Construct a scale to read 600 km and indicate a distance of 530 km on it.*

Solution : (Fig 3.4)

1. Determine the RF value as $\frac{50\text{mm}}{250\text{km}} = \frac{50}{250 \times 1000 \times 1000} = \frac{1}{5 \times 10^6}$
2. Obtain the length of the scale as: $\frac{1}{5 \times 10^6} \times 600\text{km} = 120\text{mm}$.
3. Draw a rectangular strip of length 120 mm and width 5 mm.
4. Divide the length into 6 equal parts, each part representing 10 km.
5. Repeat the steps 4 to 8 of construction in Fig 3.2. suitably.
6. Mark the distance 530 km as shown.

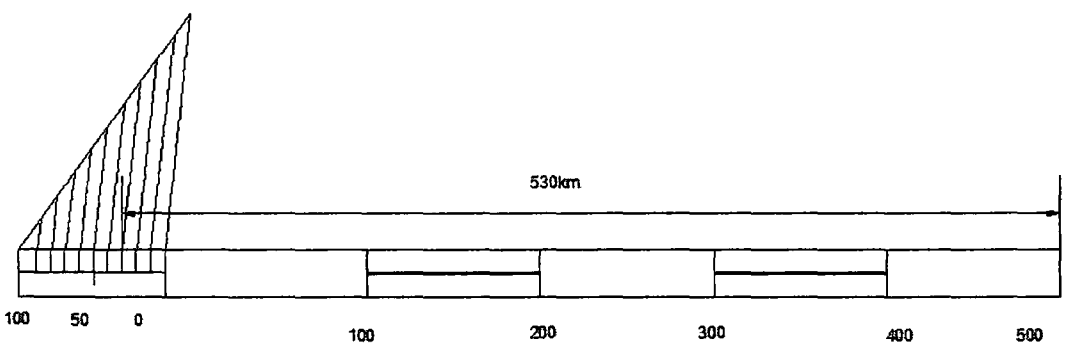

Fig. 3.4

Problem 4 : *Construct a plain scale of convenient length to measure a distance of 1 cm and mark on it a distance of 0.94 cm.*

Solution : (Fig 3.5)

This is a problem of enlarged scale.

1. Take the length of the scale as 10 cm
2. RF = 10/1, scale is 10:1
3. The construction is shown in Fig 3.5

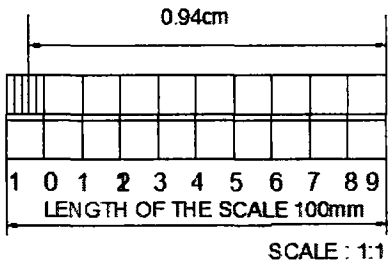

Fig. 3.5

3.4.2 Diagonal Scales

Plain scales are used to read lengths in two units such as metres and decimetres, centimetres and millimetres etc., or to read to the accuracy correct to first decimal.

Diagonal scales are used to represent either three units of measurements such as metres, decimetres, centimetres or to read to the accuracy correct to two decimals.

Principle of Diagonal Scale (Fig 3.6)

1. Draw a line AB and errect a perperrdicular at B.
2. Mark 10 equi-distant points (1,2,3, etc) of any suitable length along this perpendicular and mark C.
3. Complete the rectangle ABCD
4. Draw the diagonal BD.
5. Draw horizontals through the division points to meet BD at 1′, 2′, 3′ etc.

Considering the similar triangles say BCD and B44′

$$\frac{B4'}{CD} = \frac{B4}{BC}; \; = \frac{4}{10} \times BC \times \frac{1}{BC} = \frac{4}{10}; \; 44' = 0.4CD$$

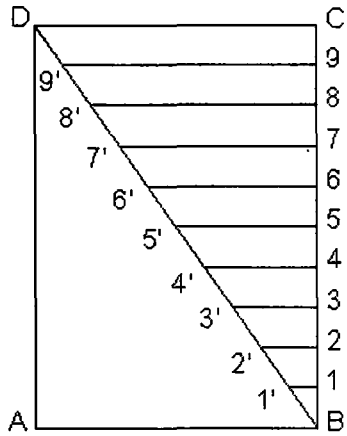

Fig. 3.6 Principle of Diagonal Scale

Thus, the lines $1-1', 2-2', 3-3'$ etc., measure 0.1CD, 0.2CD, 0.3CD etc. respectively. Thus, CD is divided into 1/10 the divisions by the diagonal BD, i.e., each horizontal line is a multiple of 1/10 CD.

This principle is used in the construction of diagonal scales.

Note : B C must be divided into the same number of parts as there are units of the third dimension in one unit of the secondary division.

Problem 5 : *on a plan, a line of 22 cm long represents a distance of 440 metres. Draw a diagonal scale for the plan to read upto a single metre. Measure and mark a distance of 187 m on the scale.*

Solution : (Fig 3.7)

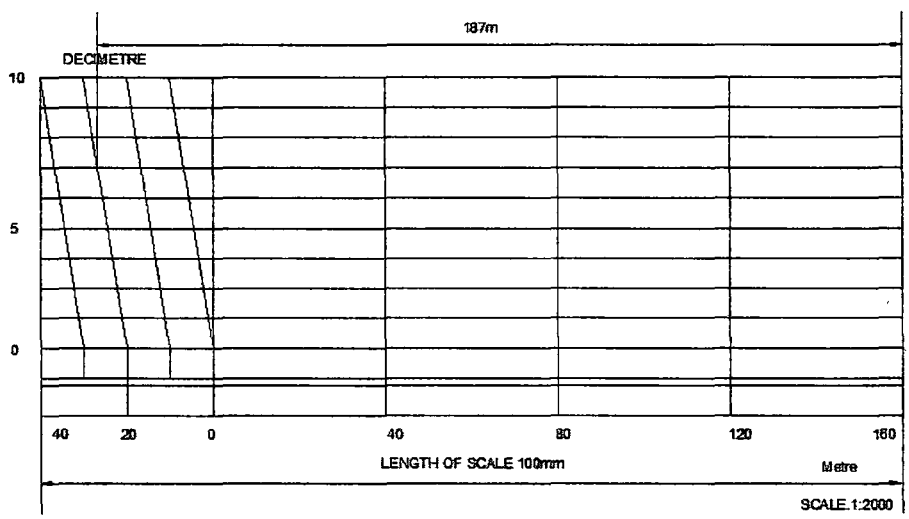

Fig. 3.7 Diagonal Scale.

1. $RF = \frac{22}{440 \times 100} = \frac{1}{2000}$

2. As 187 m are required consider 200 m.

   Therefore drawing size = R F x actual size = $\frac{1}{2000} \times 200 \times 100 = 10\text{ cm}$

   When a length of 10 cm representing 200 m is divided into 5 equal parts, each part represents 40 m as marked in the figure.

3. The first part is sub-divided into 4 divisions so that each division is 10 cm
4. On the diagonal portion 10 divisions are taken to get 1 m.
5. Mark on it 187 m as shown.

Problem 6 : *An area of 144 sq cm on a map represents an area of 36 sq km on the field. Find the RF of the scale of the map and draw a diagonal scale to show Km, hectometres and decametres and to measure upto 10 km. Indicate on the scale a distance 7 km, 5 hectometres and 6 decemetres.*

Solution : (Fig. 3.8)

1. 144 sq cm represents 36 sq km or 12 cm represent 6 km

$$RF = \frac{12}{6 \times 1000 \times 100} = \frac{1}{50000}$$

Drawing size x = R F x actual size = $\frac{10 \times 1000 \times 100}{50000} = 20\text{ cm}$

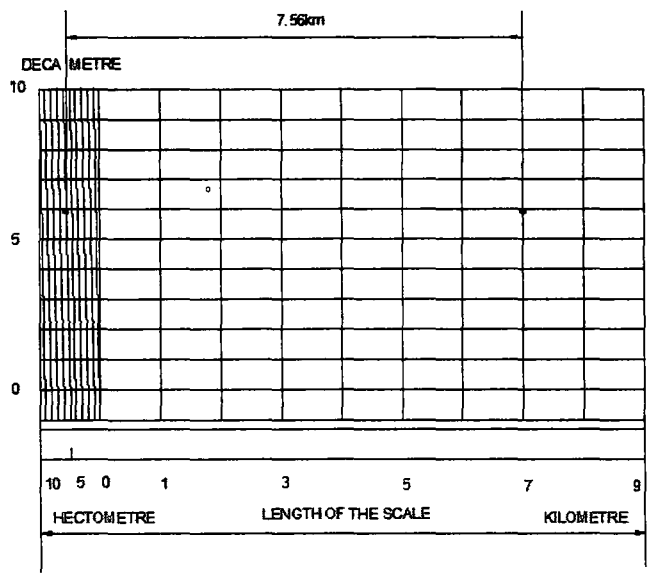

Fig. 3.8

2. Draw a length of 20 cm and divide it into 10 equal parts. Each part represents 1 km.
3. Divide the first part into 10 equal subdivisions. Each secondary division represents 1 hecometre
4. On the diagonal scale portion take 10 eqal divisions so that 1/10 of hectometre = 1 decametre is obtained.
5. Mark on it 7.56 km. as shown.

Problem 7 : *Construct a diagonal scale 1/50, showing metres, decimetres and centimetres, to measure upto 5 metres. Mark a length 4.75 m on it.*

Solution : (Fig 3.9)

1. Obatin the length of the scale as $\frac{1}{50} \times 5 \times 100 = 10\,\text{cm}$
2. Draw a line A B, 10 cm long and divide it into 5 equal parts, each representing 1 m.
3. Divide the first part into 10 equal parts, to represent decimetres.
4. Choosing any convenient length, draw 10 equi-distant parallel lines above AB and complete the rectangle A B C D.
5. Erect perpendiculars to the line A B, through 0, 1, 2, 3 etc., to meet the line C D.
6. Join D to 9, the first sub-division from A on the main scale AB, forming the first diagonal.
7. Draw the remaining diagonals, parallel to the first. Thus, each decimetre is divided into 1/10th division by diagonals.
8. Mark the length 4.75m as shown.

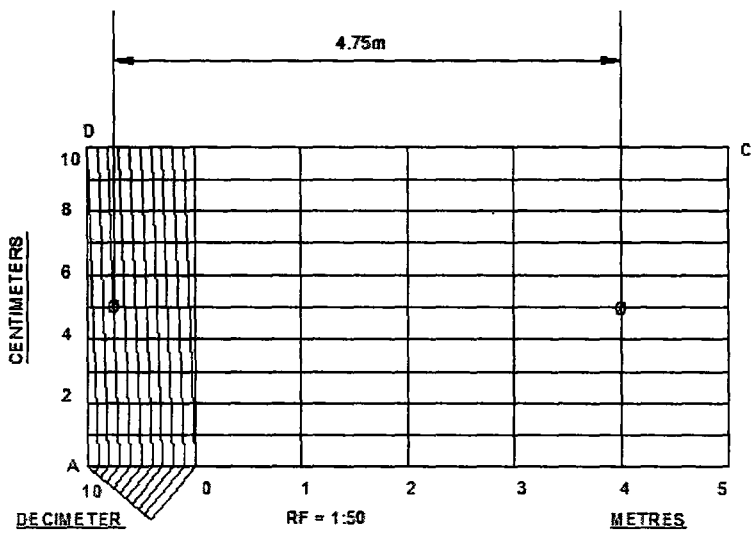

Fig. 3.9

3.4.3 Vernier Scales

The vernier scale is a short auxiliary scale constructed along the plain or main scale, which can read upto two decimal places.

The smallest division on the main scale and vernier scale are 1 msd or 1 vsd repectively. Generally (n+1) or (n-1) divisions on the main scale is divided into **n** equal parts on the vernier scale.

Thus, 1 vsd = $\frac{(n-1)}{n}$ msd or $\left(1-\frac{1}{n}\right)$ msd

When 1 vsd < 1 it is called forward or direct vernier. The vernier divisions are numbered in the same direction as those on the main scale.

When 1 vsd > 1 or (1+1/n), It is called backward or retrograde vernier. The vernier divisions are numbered in the opposite direction compared to those on the main scale.

The least count (LC) is the smallest dimension correct to which a measurement can be made with a vernier.

For forward vernier, L C = (1 msd - 1 vsd)

For backward viermier, LC = (1 vsd - 1 msd)

Problem 8 : *Construct a forward reading vernier scale to read distance correct to decametre on a map in which the actual distances are reduced in the ratio of 1 : 40,000. The scale should be long enough to measure upto 6 km. Mark on the scale a length of 3.34 km and 0.59 km.*

Solution : (Fig. 3.10)

1. RF = 1/40000; length of drawing = $\frac{6\times1000\times100}{40000}$ = 15 cm
2. 15 cm is divided into 6 parts and each part is 1 km
3. This is further divided into 10 divitions and each division is equal to 0.1 km = 1 hectometre.

   1ms d = 0.1 km = 1 hectometre

   L.C expressed in terms of m s d = (1/10) m s d

   L C is 1 decametre = 1 m s d - 1 v s d

   1 v s d = 1 - 1/10 = 9/10 m s d = 0.09 km
4. 9 m sd are taken and divided into 10 divisions as shown. Thus 1 vsd = 9/10 = 0.09 km
5. Mark on it by taking 6vsd = 6 x 0.9 = 0.54 km, 28msd (27 + 1 on the LHS of 1) = 2.8 km and Total 2.8 + 0.54 = 3.34 km.
6. Mark on it 5 msd = 0.5 km and add to it one vsd = 0.09, total 0.59 km as marked.

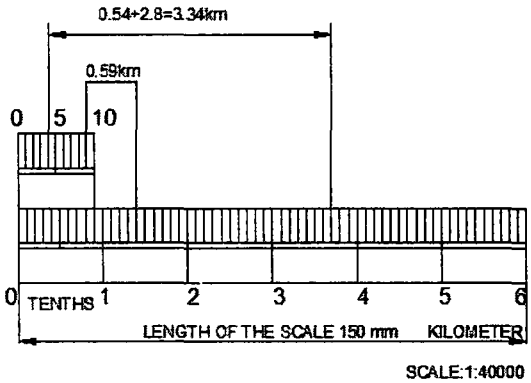

Fig. 3.10 Forward Reading Vernier Scale

Problem 9 : *construct a vernier scale to read metres, decimetres and centimetres and long enough to measure upto 4m. The RF of the scale in 1/20. Mark on it a distance of 2.28 m.*

Solution : **(Fig 3.11)**

Backward or Retrograde Vernier scale

1. The smallest measurement in the scale is cm.

   Therefore LC = 0.01m

2. Length of the scale = RF x Max. Distance to be measured

$$= \frac{1}{20} \times 4\text{m} = \frac{1}{20} \times 400 = 20\,\text{cm}$$

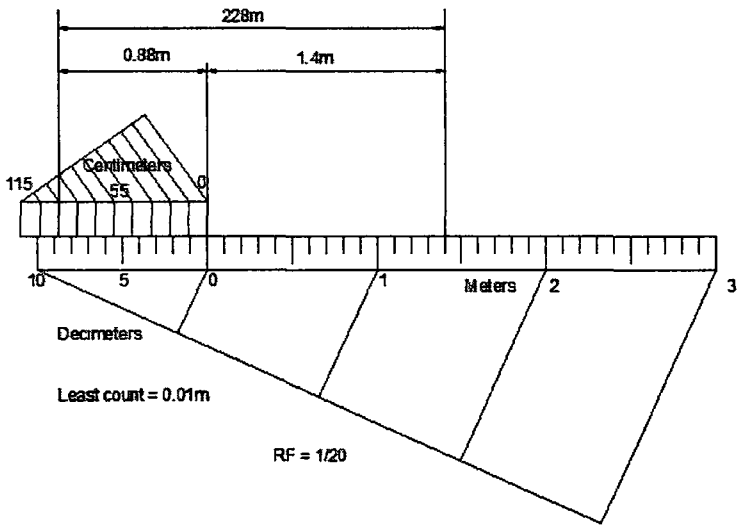

Fig. 3.11 Backward or Retrograde Vernier Scale

3. Draw a line of 20 cm length. Complete the rectangle of 20 cm x 0.5 cm and divide it into 4 equal parts each representing 1 metre. Sub divide all into 10 main scale divisions.

   1 msd = 1m/10 = 1dm.

4. Take 10 + 1 = 11 divisions on the main scale and divide it into 10 equal parts on the vernier scale by geometrical construction.

   Thus 1vsd = 11msd/10 = 1.1dm = 11cm

5. Mark 0, 55, 110 towards the left from 0 (zero) on the vernier scale as shown.
6. Name the units of the divisions as shown.

   7. 2.28m = (8 x vsd) + 14msd)
   = (8 x 0.11m) + (14 x 0.1m)
   = 0.88 + 1.4 = 2.28m.

EXERCISES

1. Construct a plain scale of 1:50 to measure a distance of 7 meters. Mark a distance of 3.6 metres on it.
2. The length of a scale with a RF of 2:3 is 20 cm. Construct this scale and mark a distance of 16.5 cm on it.
3. Construct a scale of 2 cm = 1 decimetre to read upto 1 metre and mark on it a length of 0.67 metre.
4. Construct a plain scale of RF = 1:50,000 to show kilometres and hectometres and long enough to measure upto 7 km. Mark a distance of 5:3 kilometres on the scale.
5. On a map, the distance between two places 5 km apart is 10 cm. Construct the scale to read 8 km. What is the RF of the scale?
6. Construct a diagonal scale of RF = 1/50, to read metres, decimetres and centimetres. Mark a distance of 4.35 km on it.
7. Construct a diagonal scale of five times full size, to read accurately upto 0.2 mm and mark a distance of 3.65 cm on it.
8. Construct a diagonal scale to read upto 0.1 mm and mark on it a distance of 1.63 cm and 6.77 cm. Take the scale as 3:1.
9. Draw a diagonal scale of 1 cm = 2.5km and mark on the scale a length of 26.7 km.
10. Construct a diagonal scale to read 2km when its RF=1:20,000. Mark on it a distance of 1:15 km.
11. Draw a venier scale of metres when 1mm represents 25cm and mark on it a length of 24.4 cm and 23.1 mm. What is the RF?
12. The LC of a forward reading vernier scale is 1 cm. Its vernier scale division represents 9 cm. There are 40 msd on the scale. It is drawn to 1:25 scale. Construct the scale and mark on it a distance of 0.91m.
13. 15cm of a vernier scale represents 1cm. Construct a backward reading vernier scale of RF 1:4.8 to show decimetres cm and mm. The scale should be capable of reading upto 12 decimeters. Mark on the scale 2.69 decimetres and 5.57 decimetres.

CHAPTER 4

Geometrical Constructions

4.1 Introduction

Engineering drawing consists of a number of geometrical constructions. A few methods are illustrated here without mathematical proofs.

1. **To divide a straight line into a given number of equal parts say 5.**
   construction (Fig.4.1)

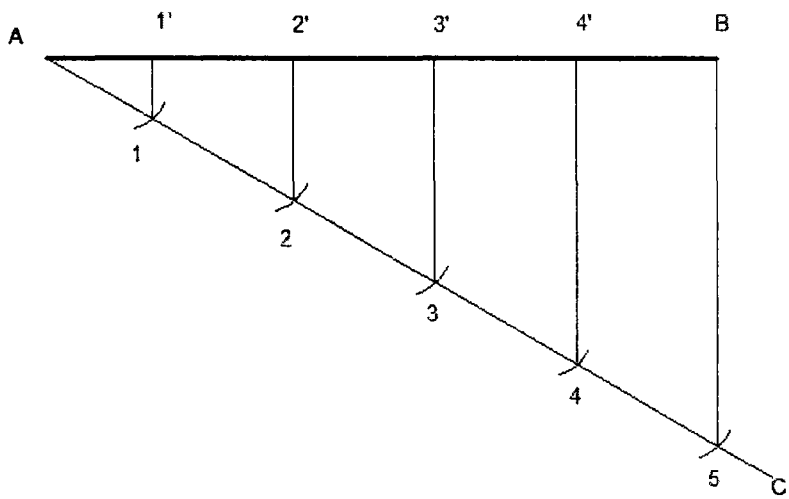

Fig. 4.1 Dividing a line

1. Draw AC at any angle θ to AB.
2. Construct the required number of equal parts of convenient length on AC like 1, 2, 3.
3. Join the last point 5 to B
4. Through 4, 3, 2, 1 draw lines parallel to 5B to intersect AB at 4', 3', 2' and 1'

2. **To divide a line in the ratio 1 : 3 : 4.**
   construction (Fig.4.2)

As the line is to be divided in the ratio 1:3:4 it has to be divided into 8 equal divisions. By following the previous example divide AC into 8 equal parts and obtain P and Q to divide the line AB in the ratio 1:3:4.

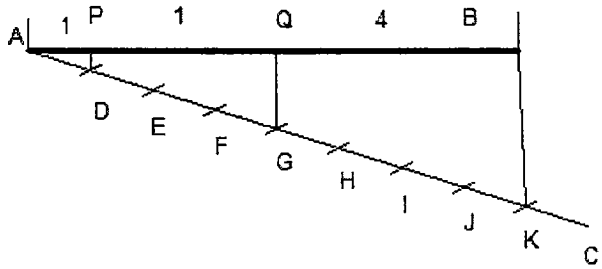

Fig. 4.2

3. **To bisect a given angle.**

   construction (Fig.4.3)

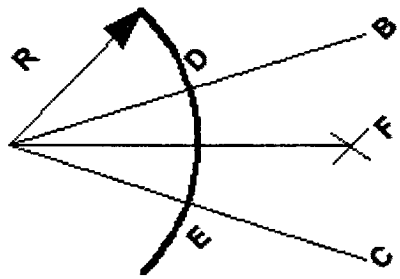

Fig. 4.3

1. Draw a line AB and AC making the given angle.
2. With centre A and any convenient radius R draw an arc intersecting the sides at D and E.
3. With centres D and E and radius larger than half the chord length DE, draw arcs intersecting at F
4. Join AF, <BAF = <FAC.

4. **To inscribe a square in a given circle.**

   construction (Fig. 4.4)

1. With centre O, draw a circle of diameter D.
2. Through the centre O, drwaw two diameters, say AC and BD at right angle to each other.
3. Join A-B, B-C, C- D, and D-A. ABCD is the required square.

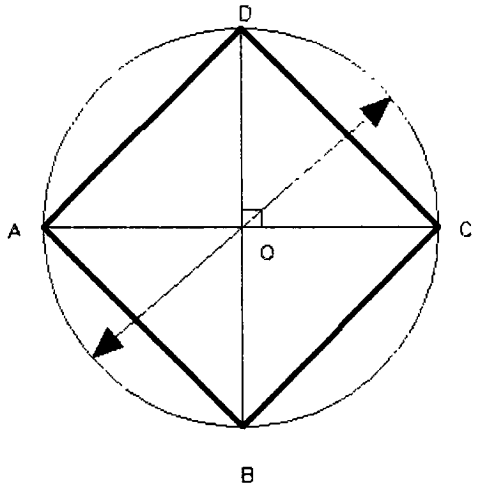

Fig. 4.4

5. To inscribe a regular polygon of any number of sides in a given circle. construction (Fig. 4.5)

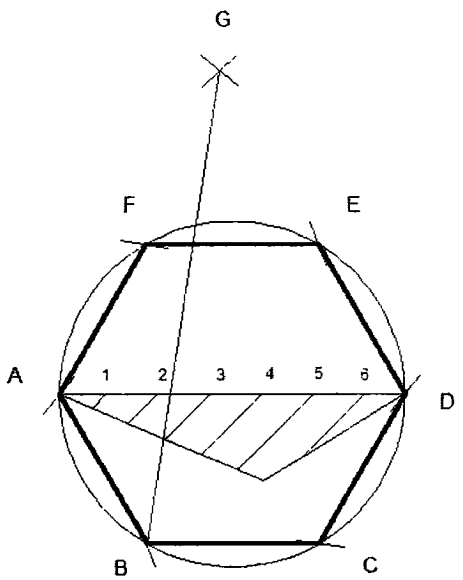

Fig. 4.5

1. Draw the given circle with AD as diameter.
2. Divide the diameter AD into N equal parts say 6.
3. With AD as radius and A and D as centres, draw arcs intersecting each other at G.
4. Join G-2 and extend to intesect the circle at B.

5. Join A-B which is the length of the side of the required polygon.
6. Set the compass to the length AB and strating from B mark off on the circuference of the circles, obtaining the points C, D, etc.

   The figure obtained by joing the points A,B, C etc., is the required polygon.

6. To inscribe a hexagon in a given circle.

(a) Construction (Fig. 4.6) by using a set-square or mini-draughter

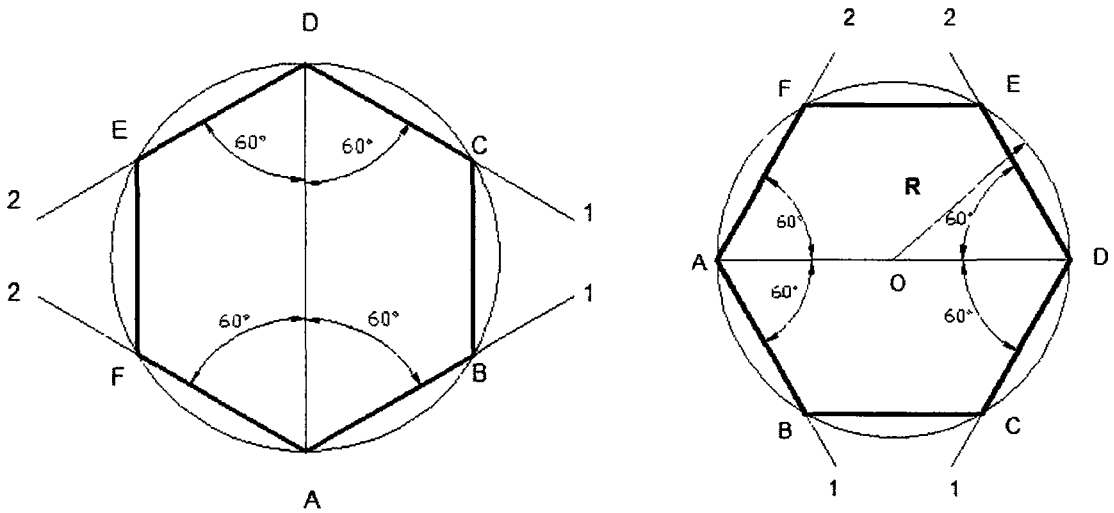

Fig. 4.6

1. With centre O and radius R draw the given crcle.
2. Draw any diameter AD to the circle.
3. Using 30^0 - 60^0 set-square and through the point A draw lines A1, A2 at an angle 60^0 with AD, intesecting the circle at B and F respectively.
4. Using 30^0 - 60^0 and through the point D draw lines D1, D2 at an angle 60^0 with DA, intersecting the circle at C and E respectively.

   By joining A,B,C,D,E,F, and A the required hexagon is obtained.

(b) Construction (Fig.4.7) By using campass

1. With centre O and radius R draw the given circle.
2. Draw any diameter AD to the circle.
3. With centres A and D and radius equal to the radius of the circle draw arcs intesecting the circles at B, F, C and E respectively.
4. A B C D E F is the required hexagon.

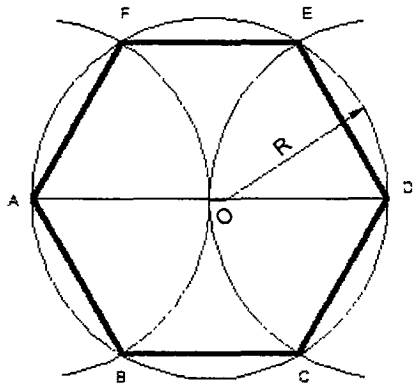

Fig. 4.7

7. To circumscribe a hexagon on a given circle of radius R construction (Fig. 4.8)

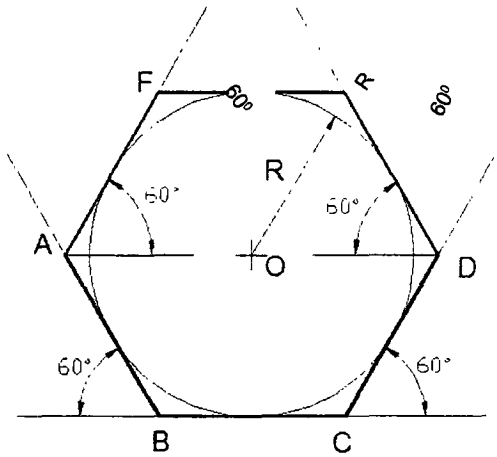

Fig. 4.8

1. With centre O and radius R draw the given circle.
2. Using 60^0 position of the mini draughter or 30^0-60^0set square, circumscribe the hexagon as shown.

8. To construct a hexagon, given the length of the side.

(a) contruction (Fig. 4.9) Using set square

1. Draw a line AB equal to the side of the hexagon.
2. Using 30^0 - 60^0 set-square draw lines A1, A2, and B1, B2.

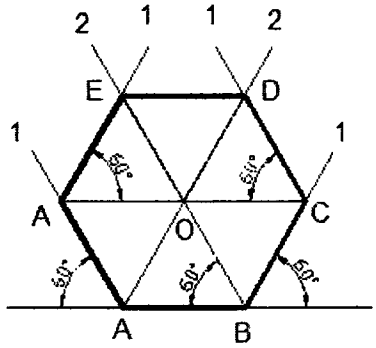

Fig. 4.9

3. Through O, the point of intesection between the lines A2 at D and B2 at E.
4. Join D,E
5. A B C D E F is the required hexagon.

(b) By using compass (Fig.4.10)

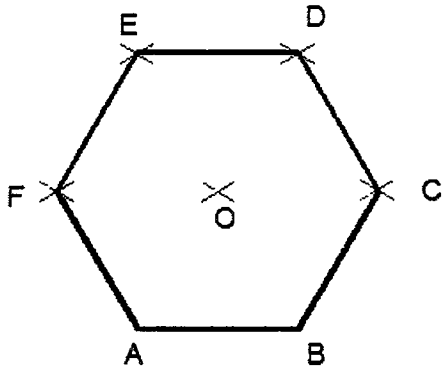

Fig. 4.10

1. Draw a line AB equal to the of side of the hexagon.
2. With centres A and B and radius AB, draw arcs intersecting at O, the centre of the hexagon.
3. With centres O and B and radius OB (=AB) draw arcs intersecting at C.
4. Obtain points D, E and F in a sinilar manner.

9. To construct a regular polygon (say a pentagon) given the length of the side. construction (Fig.4.11)

1. Draw a line AB equal to the side and extend to P such that AB = BP
2. Draw a semicircle on AP and divide it into 5 equal parts by trial and error.

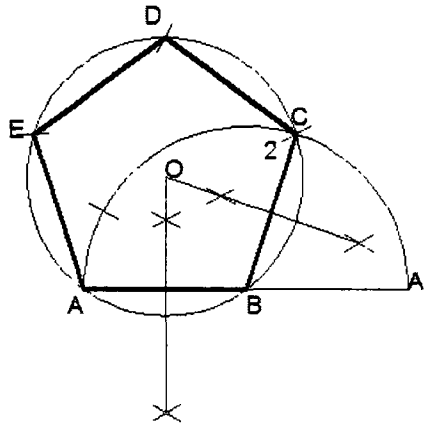

Fig. 4.11

3. Join B to second division
2. Irrespective of the number of sides of the polygon B is always joined to the second division.
4. Draw the perpendicular bisectors of AB and B2 to intersect at O.
5. Draw a circle with O as centre and OB as radius.
6. With AB as radius intersect the circle successively at D and E. Then join CD. DE and EA.

10. To construct a regular polygon (say a hexagon) given the side AB - alternate method.

construction (Fig.4.12)

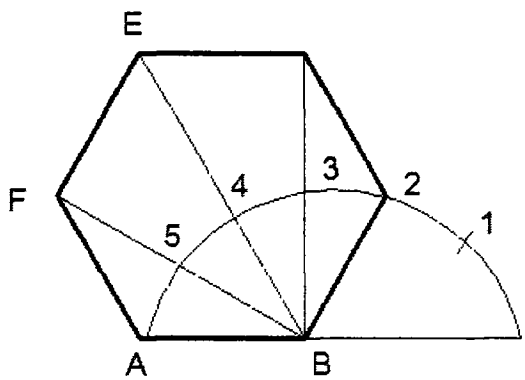

Fig. 4.12

1. Steps 1 to 3 are same as above
2. Join B- 3, B-4, B-5 and produce them.
3. With 2 as centre and radius AB intersect the line B, 3 produced at D. Similarly get the point E and F.
4. Join 2- D, D-E, E-F and F-A to get the required hexagon.

11. To construct a pentagon, given the length of side.

(a) Construction (Fig.4.13a)

1. Draw a line AB equal to the given length of side.
2. Bisect AB at P.
3. Draw a line BQ equal to AB in length and perpendicular to AB.
4. With centre P and radius PQ, draw an arc intersecting AB produced at R. AR is equal to the diagonal length of the pentagon.
5. With centres A and B and radii AR and AB respectively draw arcs intersecting at C.
6. With centres A and B and radius AR draw arcs intersecting at D.
7. With centres A and B and radii AB and AR respectively draw arcs intersecting at E. ABCDE is the required pentagon.

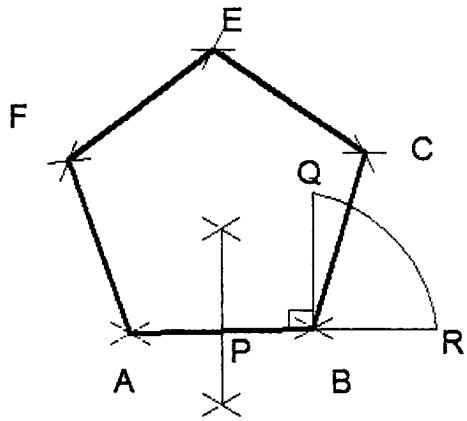

Fig. 4.13a

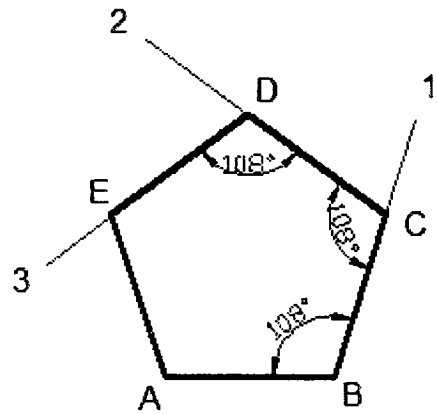

Fig. 4.13b

(b) By included angle method

1. Draw a line AB equal to the length of the given side.
2. Draw a line B1 such that <AB1 = 108° (included angle)
3. Mark C on B1 such that BC = AB
4. Repeat steps 2 and 3 and complete the pentagon ABCDE

12. To construct a regular figure of given side length and of N sides on a straight line. construction (Fig 4.14)

1. Draw the given straight line AB.
2. At B erect a perpendicular BC equal in length to AB.
3. Join AC and where it cuts the perpendicular bisector of AB, number the point 4.
4. Complete the square ABCD of which AC is the diagonal.
5. With radius AB and centre B describe arc AC as shown.

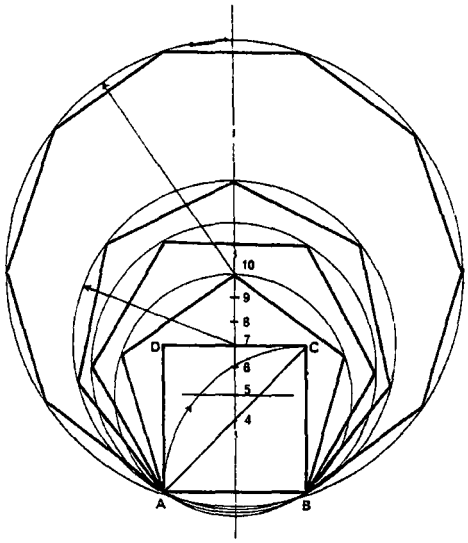

Fig. 4.14

6. Where this arc cuts the vertical centre line number the point 6.
7. This is the centre of a circle inside which a hexagon of side AB can now be drawn.
8. Bisect the distance 4-6 on the vertical centre line.
9. Mark this bisection 5. This is the centre in which a regular pentagon of side AB can now be drawn.
10. On the vertical centre line step off from point 6 a distance equal in length to the distance 5-6. This is the centre of a circle in which a regular heptagon of side AB can now be drawn.
11. If further distances 5-6 are now stepped off along the vertical centre line and are numbered consecutively, each will be the centre of a circle in which a regular polygon can be inscribed with side of length AB and with a number of sides denoted by the number against the centre.

13. To inscribe a square in a triangle.

construction (Fig. 4.15)

1. Draw the given triangle ABC.
2. From C drop a perpendicular to cut the base AB at D.
3. From C draw CE parallel to AB and equal in length to CD.
4. Draw AE and where it cuts the line CB mark F.
5. From F draw FG parallel to AB.
6. From F draw FJ parallel to CD.
7. From G draw GH parallel to CD.
8. Join H to J.

   Then HJFG is the required square.

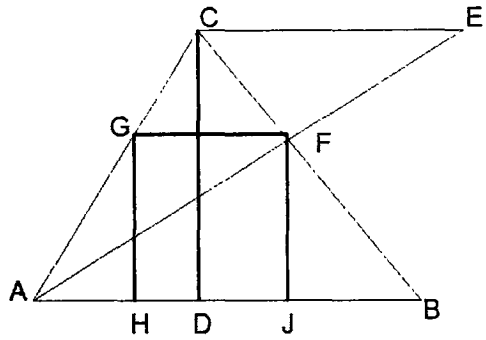

Fig. 4.15

14. To inscribe within a given square ABCD, another square, one angle of the required square to touch a side of the given square at a given point

construction (Fig 4.16)

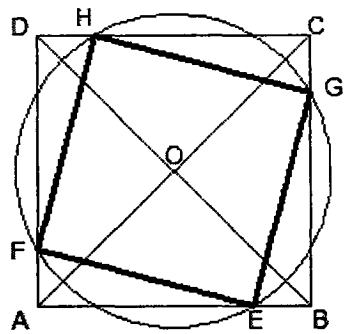

Fig. 4.16

1. Draw the given square ABCD.
2. Draw the diagonals and where they intersect mark the point O.
3. Mark the given point E on the line AB.
4. With centre O and radius OE, draw a circle.
5. Where the circle cuts the given square mark the points G, H, and F.
6. Join the points GHFE.

Then GHFE is the required square.

15. To draw an arc of given radius touching two straight lines at right angles to each other.

construction (Fig 4.17)

Let r be the given radius and AB and AC the given straight lines. With A as centre and radius equal to r draw arcs cutting AB at P and Q. With P and Q as centres draw arcs to meet at O. With O as centre and radius equal to r draw the required arc.

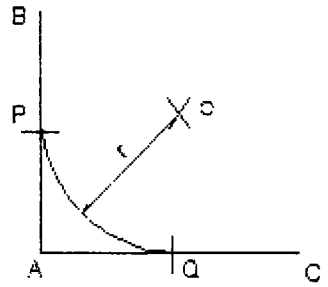

Fig. 4.17

16. To draw an arc of a given radius, touching two given straight lines making an angle between them.

construction (Fig 4.18)

Let AB and CD be the two straight lines and r, the radius. Draw a line PQ parallel to AB at a distance r from AB. Similarly, draw a line RS parallel to CD. Extend them to meet at O. With O as centre and radius equal to r draw the arc to the two given lines.

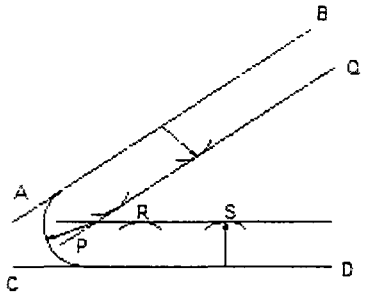

Fig. 4.18

17. To draw a tangent to a circle

construction (Fig 4.19 a and b)

(a) At any point P on the circle.

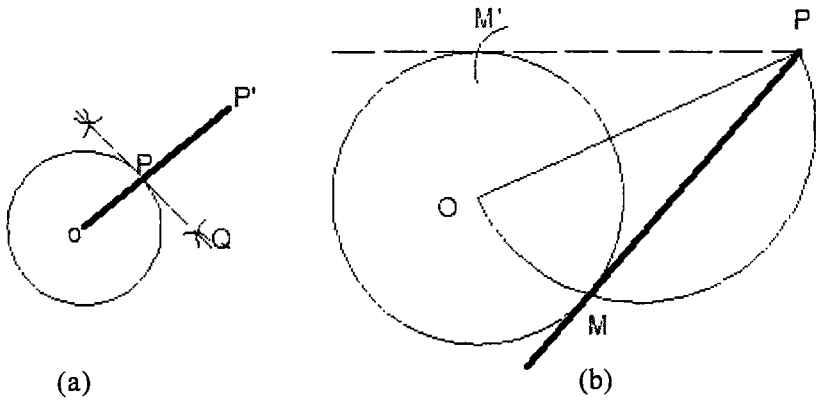

Fig. 4.19

1. With O as centre, draw the given circle. P is any point on the circle at which tangent to be drawn (Fig 4.16a)
2. Join O with P and produce it to P^1 so that OP = PP^1
3. With O and P^1 as centres and a length greater than OP as radius, draw arcs intersecting each other at Q.
4. Draw a line through P and Q. This line is the required tangent that will be perpendicular to OP at P.

(b) From any point outside the circle.

1. With O as centre, draw the given circle. P is the point outside the circle from which tangent is to be drawn to the circle (Fig 4.16b).
2. Join O with P. With OP as diameter, draw a semi-circle intersecting the given circle at M. Then, the line drawn through P and M is the required tangent.
3. If the semi-circle is drawn on the other side, it will cut the given circle at M^1. Then the line through P and M^1 will also be a tangent to the circle from P.

4.2 Conic Sections

Cone is formed when a right angled triangle with an apex and angle θ is rotated about its altitude as the axis. The length or height of the cone is equal to the altitude of the triangle and the radius of the base of the cone is equal to the base of the triangle. The apex angle of the cone is 2θ (Fig.4.20a).

When a cone is cut by a plane, the curve formed along the section is known as a conic. For this purpose, the cone may be cut by different section planes (Fig.4.20b) and the conic sections obtained are shown in Fig.4.20c, d, and e.

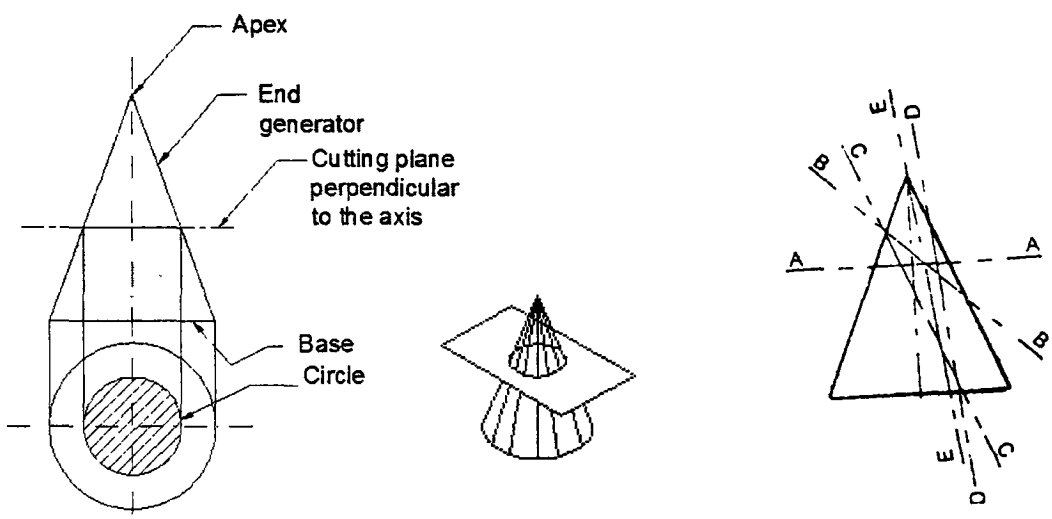

Fig. 4.20a&b

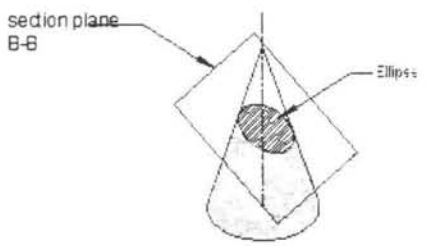

c- Ellipse

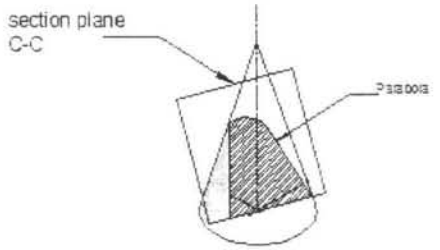

d- Parabola

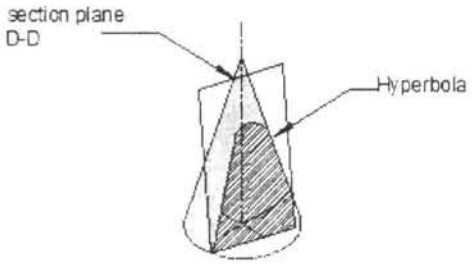

e- Hyperbola

Fig. 4.20c,d&e

4.2.1 Circle

When a cone is cut by a section plane A-A making an angle $\alpha = 90^0$ with the axis, the section obtained is a circle. (Fig 4.20a)

4.2.2 Ellipse

When a cone is cut by a section plane B-B at an angle, α more than half of the apex angle i.e., θ and less than 90^0, the curve of the section is an ellipse. Its size depends on the angle α and the distance of the section plane from the apex of the cone.

4.2.3 Parabola

If the angle α is equal to θ i.e., when the section plane C-C is parallel to the slant side of the cone. the curve at the section is a parobola. This is not a closed figure like circle or ellipse. The size of the parabola depends upon the distance of the section plane from the slant side of the cone.

4.2.4 Hyperbola

If the angle α is less than θ (section plane D-D), the curve at the section is hyperbola. The curve of intersection is hyperbola, even if $\alpha = \theta$, provided the section plane is not passing through the apex of the cone. However if the section plane passes through the apex, the section produced is an isosceles triangle.

4.2.5 Conic Sections as Loci of a Moving Point

A conic section may be defined as the locus of a point moving in a plane such that the ratio of its distance from a fixed point (Focus) and fixed straight line (Directrix) is always a constant. The ratio is called eccentricity. The line passing through the focus and perpendicular to the directrix is the axis of the curve. The point at which the conic section intersects the axis is called the vertex or apex of the curve.

The eccentricity value is less than 1 for ellipse, equal to 1 for parabola and greater than 1 for hyperbola (Fig.4.21).

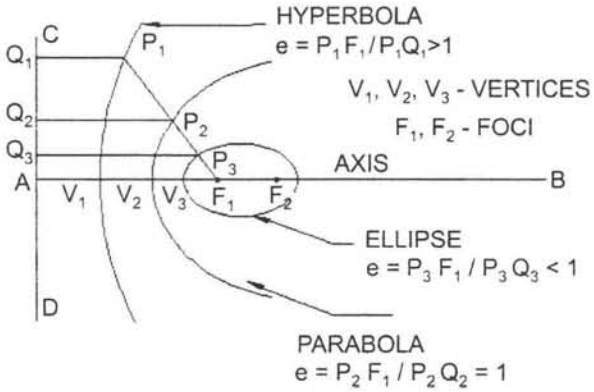

Fig. 4.21

To draw a parabola with the distance of the focus from the directrix at 50mm (Eccentricity method Fig.4.22).

1. Draw the axis AB and the directrix CD at right angles to it:
2. Mark the focus F on the axis at 50mm.
3. Locate the vertex V on AB such that AV = VF
4. Draw a line VE perpendicular to AB such that VE = VF\
5. Join A,E and extend. Now, VE/VA = VF/VA = 1, the eccentricity.
6. Locate number of points 1,2,3, etc., to the right of V on the axis, which need not be equidistant.
7. Through the points 1,2,3, etc., draw lines perpendicular to the axis and to meet the line AE extended at 1', 2', 3' etc.
8. With centre F and radius 1-1, draw arcs intersecting the line through 1 at P_1 and P_1^1.
9. Similarly, lolcate the points P_2, P_2^1, P_3, P_3^1, etc., on either side of the axis. Join the points by smooth curve, forming the required parabola.

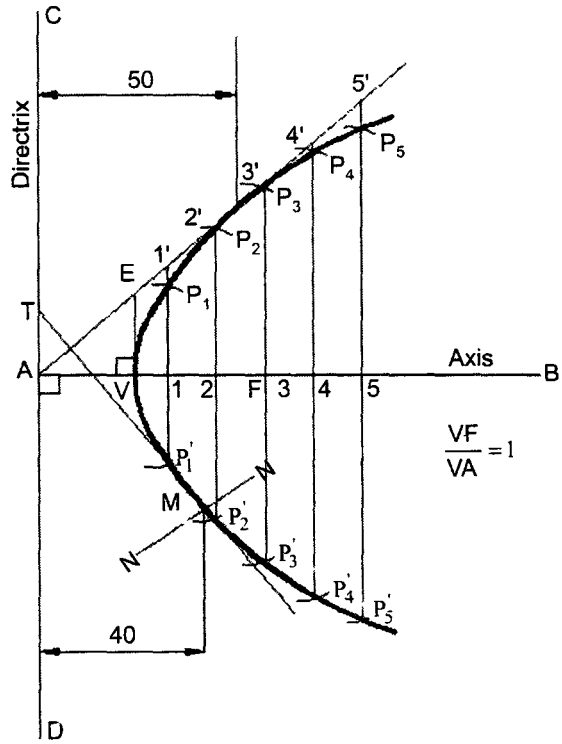

Fig. 4.22 Construction of a Parabola -Eccentricity Method

To draw a normal and tangent through a point 40mm from the directrix.

To draw a tangent and normal to the parabola. locate the point M which is at 40 mm from the directrix. Then join M to F and draw a line through F, perpendicular to MF to meet the directrix at T. The line joining T and M and extended is the tangent and a line NN, through M and perpendicular to TM is the normal to the curve.

To draw an Ellipse with eccentricity equal to 2/3 for the above problem (Fig. 4.23).

Construction is similar to the one in Fig.4.22 to draw an ellipse including the tangent and normal. only the eccentricity is taken as 2/3 instead of one.

Draw a hyperbola with eccentricity equal to 3/2 for the above problem (Fig. 4.24).

The construction of hyperobola is similar to the above problems except that the eccentricity ratio VF/VA = 3/2 in this case.

Note : The ellipse is a closed curve and has two foci and two directrices. A hyperbola is an open curve.

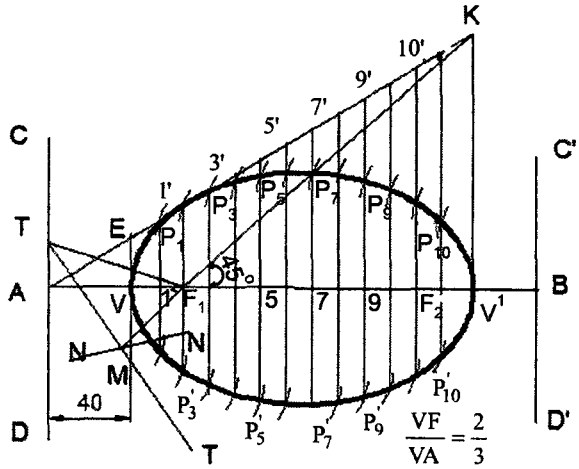

Fig. 4.23

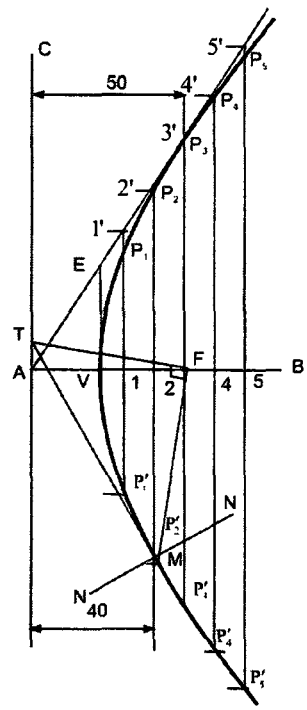

Fig. 4.24

Other Methods of Construction of Ellipse

Given the dimensions of major and minor axes the ellipse can be drawn by, (i) Foci method, (ii) Oblong method, (iii) Concentric circle method and (iv) Trammel method.

To draw an ellipse with major and minor axes equal to 120 mm and 80 mm respectively.

Definition of Ellipse (Fig.4.25)

Ellipse is a curve traced by a point moving such that the sum of its distances from the two fixed points, foci, is constant and equal to the major axis.

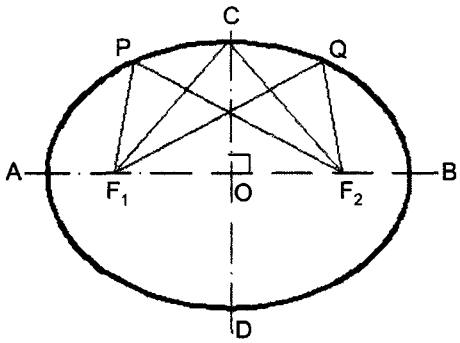

Fig. 4.25 Properties of an Ellipse

Referring Fig.4.25, F_1, and F_2 are the two foci, AB is the major axis and CD is the minor axis. As per the difinition, $PF_1 + PF_2 = CF_1 + CF_2 = QF_1 + QF_2 = AB$. It may also be noted that $CF_1 = CF_2 = 1/2$ AB (Major axis)

Construction

1. **Foci Method (Fig.4.26)**

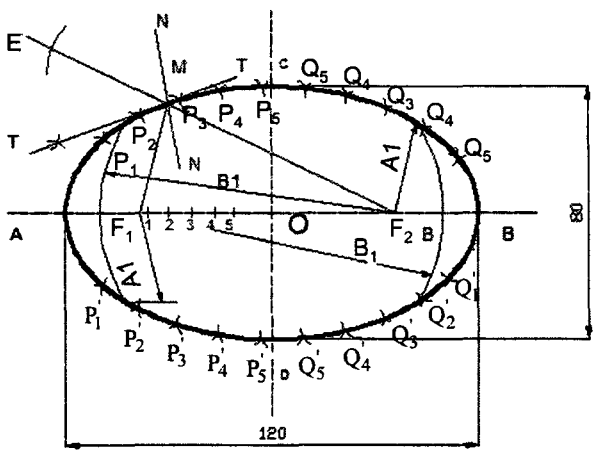

Fig. 4.26 Construction of Ellipse - Foci Method

1. Draw the major (AB) and ninor (CD) axes and locate the centre O.
2. Locate the foci F_1 and F_2 by taking a radius equal to 60 mm (1/2 of AB) and cutting AB at F_1 P_1 and F_2 with C as the centre.
3. Mark a number of points 1,2,3 etc., between F_1 and O, which need not be equi-distance.
4. With centres F_1 and F_2 and radii A1 and B1 respectively, draw arcs intersecting at the points P_1 and P_1'.
5. Again with centres F_1 and F_2 and radii B1 and A1 respectively, draw arcs intersecting at the points Q_1 and Q_1'.
6. Repeat the steps 4 and 5 with the remaining points 2,3,4 etc., and obtain additional points on the curve.

   Join the points by a smooth curve, forming the required ellipse.

To mark a Tangent and Normal to the ellipse at any point, say M on it, join the foci F_1 and F_2 with M and extend F_2M to E and bisect the angle <EMF_1. The bisector TT represents the required tangent and a line NN drawn through M and perpendicular to TT is the normal to the ellipse.

2. Oblong Method (Fig.4.27)

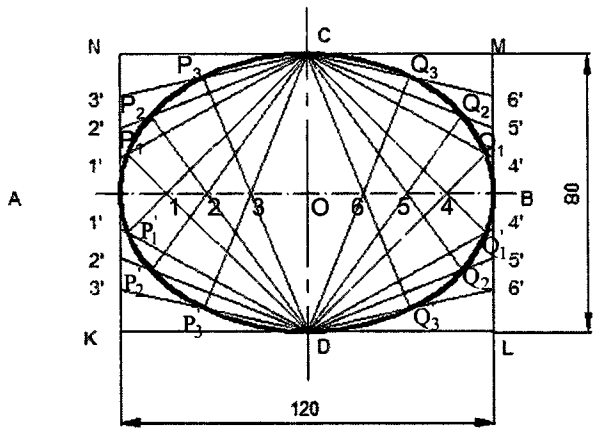

Fig. 4.27 Oblong Method

1. Draw the major and minor axes AB and CD and locate the centre O.
2. Draw the rectangle KLMN passing through A,D,B,C.
3. Divide AO and AN into same mumber of equal parts, say 4.
4. Join C with the points 1', 2', 3'.
5. Join D with the points 1,2,3 and extend till they meet the lines C_1', C_2', C_3' respectively at P_1, P_2 and P_3.

6. Repeat steps 3 to 5 to obtain the points in the remaining three quadrants.
7. Join the points by a smooth curve forming the required ellipse.

To draw an ellipse passing through any three given points not in a line.

Construction (Fig. 4.28)

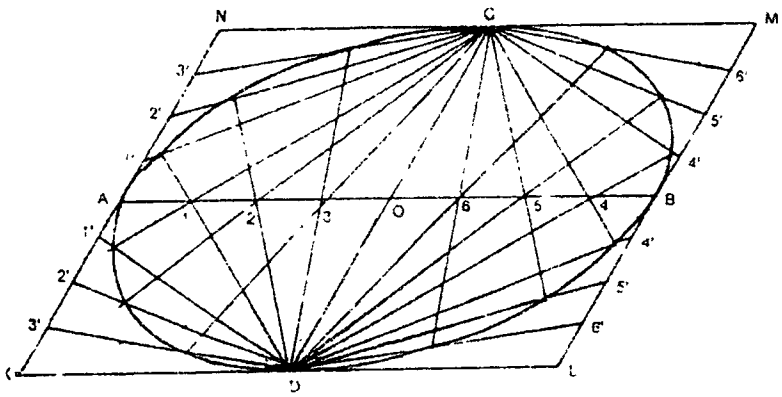

Fig. 4.28

1. Locate the given points A,B and C
2. Join A and B (which is longer than AC and BC) and locate its centre. This becomes the major axis of the ellipse.
3. Draw CO and extend it to D such that CO = OD and CD is the minor axis of the ellipse.
4. Draw the parallelogram KLMN, Passing through A,D,B and C.
5. Follow the steps given is Fig.4.27 and obtain the points on the curve.
6. Join the points by a smooth curve, forming the required ellipse.

3. Concentric Circles Method (Fig. 4.29)

1. Draw the major and minor axes AB and CD and locate the centre O.
2. With centre O and major axis and minor axes as diameters, draw two concentric circles.
3. Divide both the circles into equal number of parts, say 12 and draw the radial lines.
4. Considering the radial line 0-1'-1, draw a horizontal line from 1' to meet the vertical line from 1 at P_1.
5. Repeat the steps 4 and obtain other points P_2, P_3, etc.
6. Join the points by a smooth curve forming the required ellipse.

4. Trammel Method (Fig.4.30)

1. Draw the major and minor axes AB and CD and then locate the centre O.
2. Take a strip of stiff paper and prepare a trammel as shown. Mark the semi-major and semi-minor axes PR and PQ on the trammel.

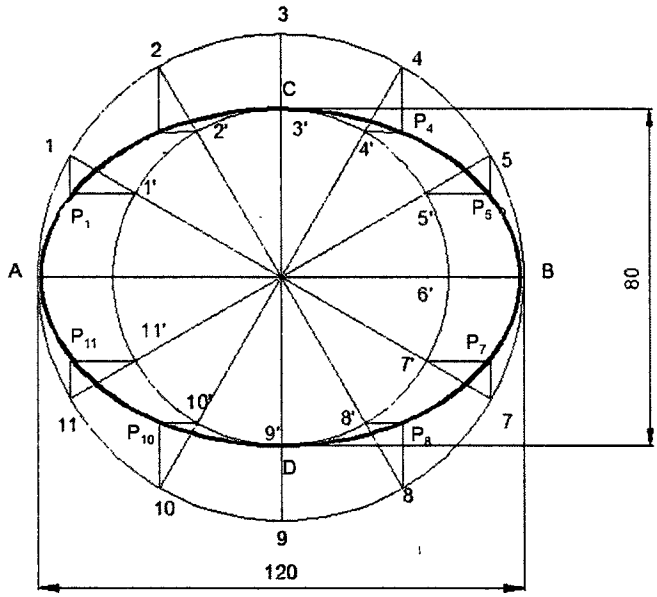

Fig. 4.29 Concetric Circle Method

3. Position the trammel so that the points R and Q lie respectively on the minor and major axes. As a rule, the third point P will always lie on the ellipse required.
4. Keeping R on the minor axis and Q on the mojor axis, move the trammel to other position and locate other points on the curve.
5. Join the points by a smooth curve forming the required ellipse.

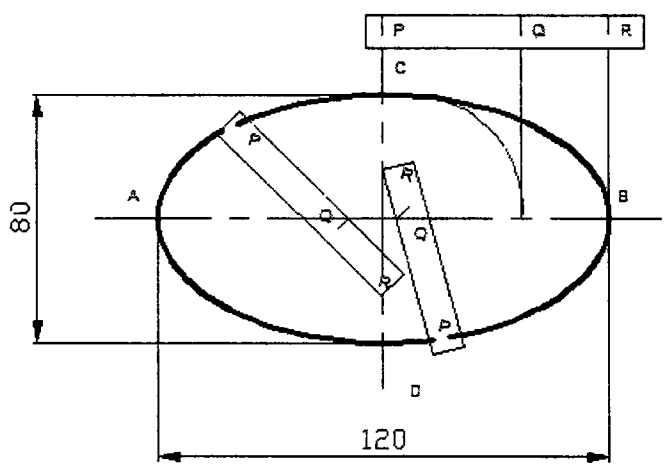

Trammel Method

Fig. 4.30 Trammel Method

Other Methods of Constructing Parabola

To draw a parabola with 70 mm as base and 30 mm as the length of the axis.

1. Tangent Method (Fig.4.31)

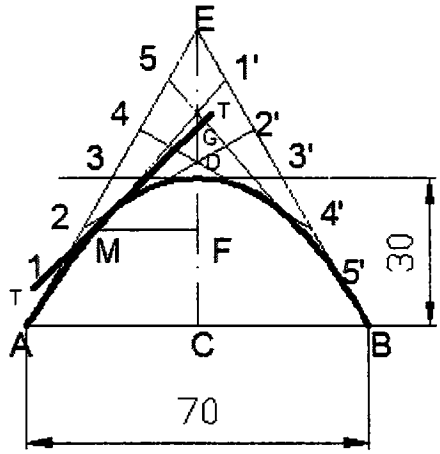

Fig. 4.31 Tangent Method

1. Draw the base AB and locate its mid-point C.
2. Through C, draw CD perpendicular to AB forning the axis
3. Produce CD to E such that DE = CD
4. Join E-A and E-B. These are the tangents to the parabola at A and B.
5. Divide AE and BE into the same number of equal parts and number the points as shown.
6. Join 1-1', 2-2', 3-3', etc., forming the tangents to the required parabola.
7. A smooth curve passing through A, D and B and tangential to the above lines is the required parabola.

Note : To draw a tangent to the curve at a point, say M on it, draw a horizontal through M, meeting the axis at F. mark G on the extension of the axis such that DG = FD. Join G, M and extend, forming the tangent to the curve at M.

2. Rectangle Method (Fig. 4.32)

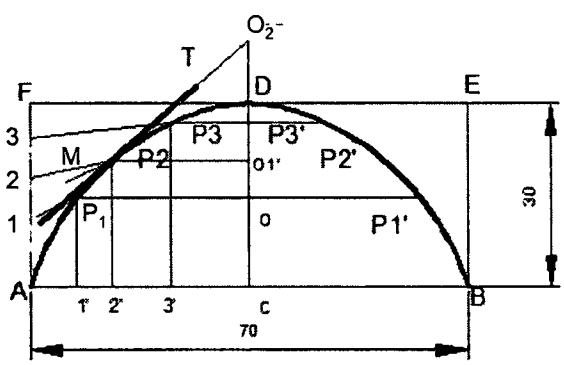

Fig. 4.32 Construction of Parabola

1. Draw the base AB and axis CD such that CD is perpendicular bisector to AB.
2. Construct a rectangle ABEF, passing through C.
3. Divide AC and AF into the same number of equal parts and number the points as shown.
4. Join 1,2 and 3 to D.
5. Through 1', 2' and 3', draw lines parallel to the axis, intersecting the lines 1D, 2D and 3D at P_1, P_2 and P3 respectively.
6. Obtain the points P_1', P_2' and P_3', which are symmetrically placed to P_1, P_2 and P_3 with respect to the axis CD.
7. Join the points by a smooth curve forming the required parabola.

Note : Draw a tangent at M following the method indicated in Fig.4.31.

Method of constructing a hyperbola, given the foci and the distance between the vertices. (Fig 4.33)

A hyperbola is a curve generated by a point moving such that the difference of its distances from two fixed points called foci is always constant and equal to the distance between the vertices of the two branches of hyperbola. This distance is also known as the major axis of the hyperbola.

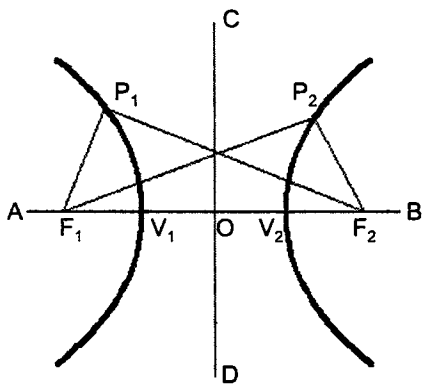

Fig. 4.33 Properties of Hyperbola

Refering Fig.4.33, the difference between $P_1F_1 \sim P_1F_2 = P_2F_2 \sim P_2F_1 = V_1V_2$ (major axis)

The axes AB and CD are known as transverse and conjugate axes of the hyperbola. The curve has two branches which are symmetric about the conjugate axis.

Problem : *Construct a hyperbola with its foci 70 mm apart and the mojor axis (distance between the vertices)as 40 mm. Draw a tangent to the curve at a point 20 mm from the focus.*

Construction (Fig. 4.34)

1. Draw the transverse and conjugate axes AB and CD of the hyperbola and locate F_1 and F_2, the foci and V_1 and V_2, the vertices.
2. Mark number of points 1,2,3 etc., on the transverse axis, which need not be equi-distant.

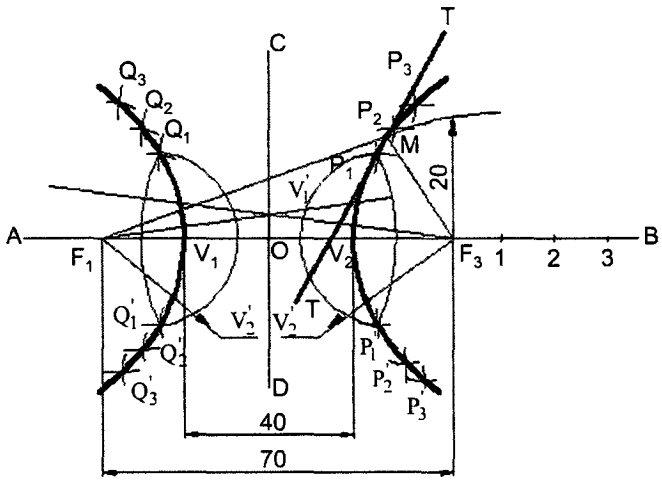

Fig. 4.34 Construction of a Hyperbola

3. With centre F_1 and radius $V_1 1$, draw arcs on either side of the transverse axis.
4. With centre F_2 and radius $V_2 1$, draw arcs intersecting the above arcs at P_1, and P_1'.
5. With centre F_2 and radius $V_1 1$, draw arcs on either side of the transverse axis.
6. With centre F_1 and radius $V_2 1$, draw arcs intersecting the above arcs at Q_1, Q^1_1.
7. Repeat the steps 3 to 6 and obtain other points P_2, P^1_2, etc. and Q_2, Q^1_2, etc.
8. Join the points $P_1, P_2, P_3, P_1', P_2', P_3'$ and $Q_1, Q_2, Q_3, Q_1', Q_2', Q_3'$ forming the two branches of hyperbola.

Note : To draw a tangent to the hyperbola, locate the point M which is at 20mm from the focus say F_2. Then, join M to the foci F_1 and F_2. Draw a line TT, bisecting the $<F_1MF_2$ forming the required tangent at M.

To draw the asymptotes to the given hyperbola

Lines passing through the centre and tangential to the curve at infinity are known as asymptotes.

Construction (4.35)

1. Through the vertices V_1 and V_2 draw perpendiculars to the transverse axis.
2. With centre O and radius $OF_1 = (OF_2)$, draw a circle meeting the above lines at P, Q and R,S.
3. Join the points P,O,R and S,O,Q and extend, forming the asymptotes to the hyperbola.

Note : The circle drawn with O as centre and V_1 V_2 as diameters is known as auxiliary circle. Asymptotes intersect the auxiliary circle on the directrix. Thus, D_1, D_1 and $D_2 D_2$ are the two directrices for the two branches of hyperbola.

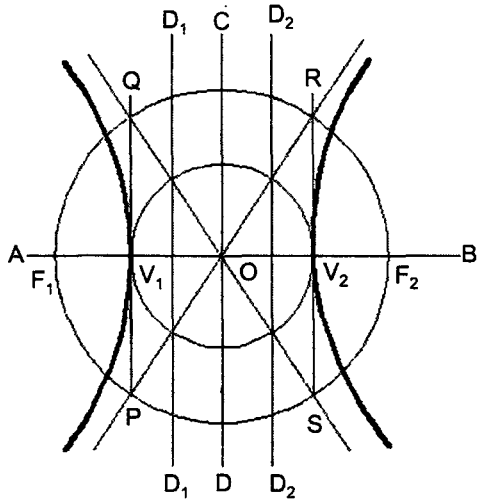

Fig. 4.35 Drawing asymptotes to a hyperbola

Rectangular Hyperbola

When the asymptotes to the hyperbola intersect each other at right angles, the curve is known as a rectangular hyperbola.

Application of Conic Curves

An ellipsoid is generated by rotating an ellipse about its major axis. An ellipsoidal surface is used as a head-lamp reflector. The light source (bulb) is placed at the first focus F_1 (Fig.4.36). This works effectively, if the second focus F_2 is at a sufficient distance from the first focus. Thus, the light rays reflecting from the surface are almost parallel to each other.

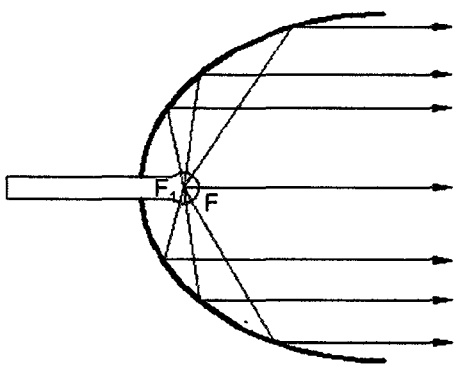

Fig. 4.36 Ellipsoidal Reflector

Parabolic Curve

The parabolic curve finds its application for reflecting surfaces of light, Arch forms, cable forms in suspension bridges, wall brickets of uniform strength, etc.

The paraboloid reflector may be used as a solar heater. When it is properly adjusted, the sun rays emanating from infinite distance, concentrate at the focus and thus produce more heat. The wall bracket of parabolic shape exhibits equal bending strength at all sections (Fig.4.37)

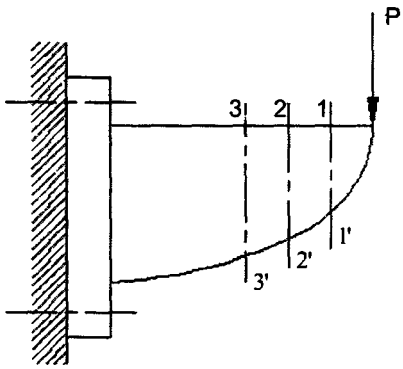

Fig. 4.37 Wall bracket of uniform strength

Hyperbola

A rectangular hyperboler is a graphical reprentation of Boyes law, PV=Constant. This curve also finds its application in the design of water channels.

Problem : *Draw an ellipse with mojor axis 120 mm and minor axis 80 mm. Determine the eccentricity and the distance between the directrices.*

Construction (Fig. 4.38)

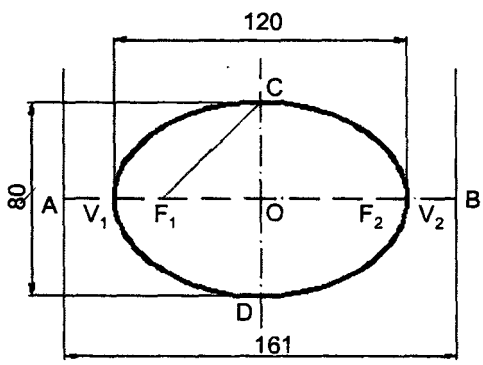

Fig. 4.38

Eccentricity $e = V_1 F_1 / V_1 A = V_1 F_2 / V_1 B$

therefore $V_1 F_2 - V_1 F_1 / V_1 B - V_1 A = F_1 F_2 / V_1 V_2$

From the triangle F_1 CO

OC = 40 mm (half of minor axis)

F_1C = 60 mm (half of major axis)

Thus $F_1 0 = \sqrt{60^2 - 40^2} = 44.7$mm

Hence $F_1 F_2 = 2F_1 O = 89.4$ mm

on substitution $e = \frac{89.4}{120} = 0.745$.Also, eccentricity $e = V_1 V_2/AB$, Hence, the distance between the directrices $AB = V_1 V_2/e = 161$mm.

Problem : *A fountain jet is dicharged from the ground level at an inclination of 45⁰. The jet travels a horizontal distance of 10 m from the point of discharge and falls on the ground. Trace the path of the jet.*

Construction (Fig. 4.39)

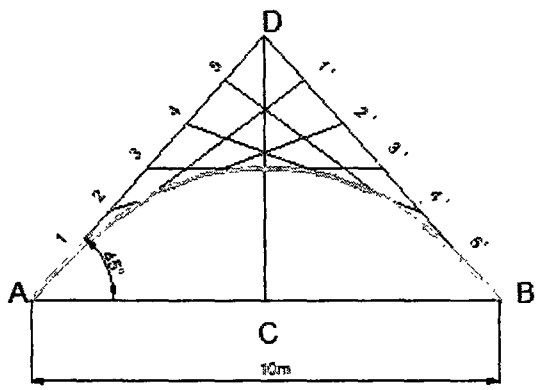

Fig. 4.39

1. Draw the base AB of 10 m long and locate its mid-point C.
2. Through C draw a line perpendicular to AB forming the axis.
3. Through A and B, draw lines at 45⁰, to the base intersecting the axis at D.
4. Divide AD and BD into the same number of equal parts and number the points as shown.
5. Join 1-1', 2-2', 3-3' etc., forming the tangents to the required path of jet.
6. A smooth curve passing through A and B and tangential to the above lines is the required path of the jet which is parabolic in shape.

Problem : *A stone is thrown from a building of 7 m high and at its highest flight it just crosses a plam tree 14 m high. Trace the path of the stone, if the distance between the building and the tree measured along the ground is 3.5 m.*

Construction (Fig.4.40)

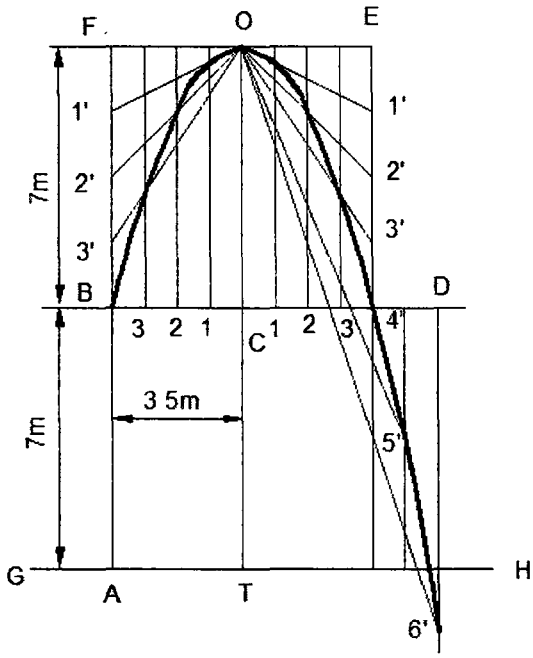

Fig. 4.40

1. Draw lines AB and OT, representing the building and plam tree respectively, 3.5 m apart and above the ground level.
2. Locate C and D on the horizontal line through B such that CD=BC=3.5 and complete the rectangle BDEF.
3. Inscribe the parabola in the rectangle BDEF, by rectangular method.
4. Draw the path of the stone till it reaches the ground (H) extending the principle of rectangle method.

4.3 Special Curves

Cycloidal Curves

Cycloidal curves are generated by a fixed point in the circumference of a circle when it rolls without slipping along a fixed straight line or circular path. The rolling circle is called the generating circle, the fixed straight line, the directing line and the fixed circle, the directing circle.

4.3.1 Cycloid

A cycloid is a curve generated by a fixed point on the circumference of a circle, when it rolls without slipping along a straight line.

To draw a cycloid, given the radius R of the generating circle.

Construction (Fig. 4.41)

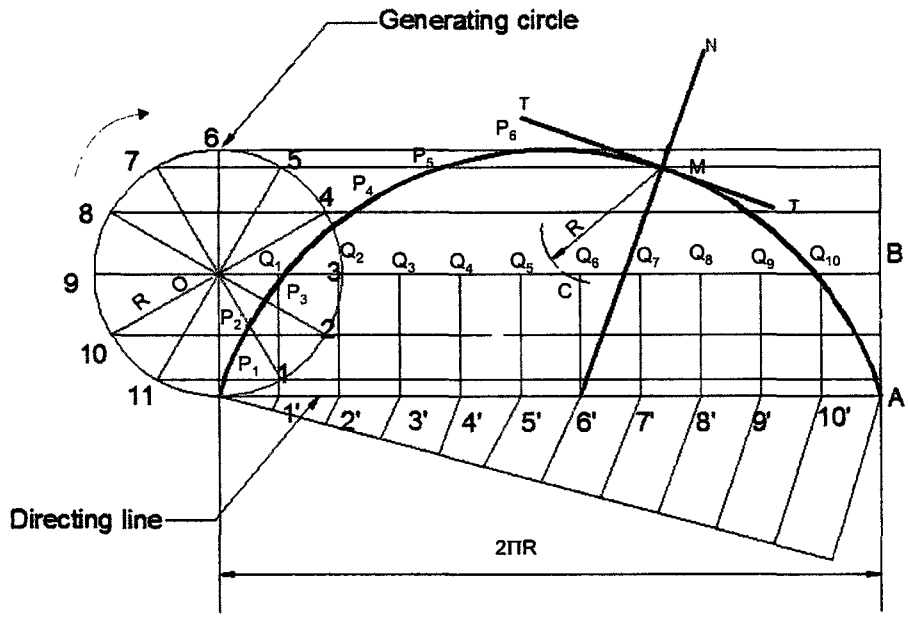

Fig. 4.41 Construction of a Cycloid

1. With centre O and radius R, draw the given generating circle.
2. Assuming point P to be the initial position of the generating point, draw a line PA, tangential and equal to the circumferance of the circle.
3. Divide the line PA and the circle into the same number of equal parts and nuber the points.
4. Draw the line OB, parallel and equal to PA. OB is the locus of the centre of the generating circle.
5. Errect perpendiculars at $1^1, 2^1, 3^1$, etc., meeting OB at O_1, O_2, O_3, etc.
6. Through the points 1,2,3 etc., draw lines parallel to PA.
7. With centre O, and radius R, draw an arc intersecting the line through 1 at P_1, P_1 is the position of the generating point, when the centre of the generating circle moves to O_1.
8. Similarly locate the points P_2, P_3 etc.
9. A smooth curve passing through the points P, P_1, P_2, P_3 etc., is the required cycloid.

Note : T-T is the tangent and NM is the normal to the curve at point M.

4.3.2 Epi-Cycloid and Hypo-Cycloid

An epi-cycloid is a curve traced by a point on the circumference of a generating circle, when it rolls without slipping on another circle (directing circle) outside it. If the generating circle rolls inside the directing circle, the curve traced by the point in called hypo-cycloid

To draw an epi-cyloid, given the radius 'r' of the generating circle and the radious 'R' of the directing circle.

Construction (Fig.4.42)

1. With centre O' and radius R, draw a part of the directing circle.
2. Draw the generating circle, by locating the centre O of it, on any radial line O' P extended such that OP = r.
3. Assuming P to be the generating point, locate the point, A on the directing circle such that the arc length PA is equal to the circumference of the generating circle. The angle subtended by the arc PA at O' is given by θ = <P O' A = 3600 x r/R.
4. With centre O' and radius O'O, draw an arc intersecting the line O'A produced at B. The arc OB is the locus of the centre of the generating circle.
5. Divide the arc PA and the generating circle into the same number of equal parts and number the points.
6. Join O'-1', O'-2', etc., and extend to meet the arc OB at O_1,O_2 etc.
7. Through the points 1,2,3 etc., draw circular arcs with O' as centre.
8. With centre O_1 and radius r, draw an arc intersecting the arc through 1 at P_1.
9. Similarly, locate the points P_2, P_3 etc.

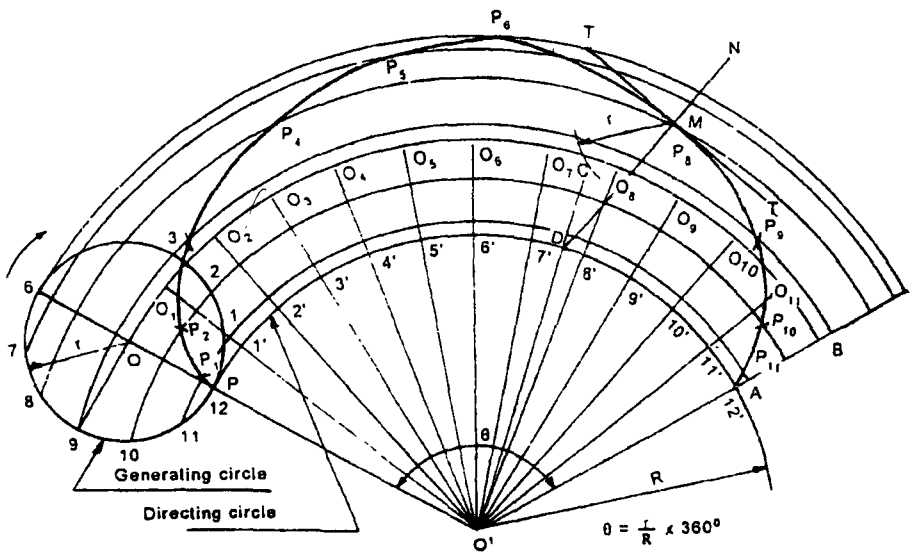

Fig. 4.42 Construction of an EPI-Cycloid

10. A smooth curve through the points P_1, P_2, P_3 etc., is the required epi-cycloid.

Note 1 : The above procedure is to be followed to construct a hypo-cycloid with the generating circle rolling inside the directing circle (Fig. 4.43).

Note 2 : T-T is the tangent and NM is the normal to the curve at the point M.

4.4 Involutes

An involute is a curve traced by a point on a perfectly flexible string, while unwinding from around a circle or polygon the string being kept taut (tight). It is also a curve traced by a point on a straight line while the line is rolling around a circle or polygon without slipping.

To draw an involute of a given square.

Construction (Fig 4.44)

1. Draw the given square ABCD of side a.
2. Taking A as the starting point, with centre B and radius BA=a, draw an arc to intersect the line CB produced at P_1.
3. With Centre C and radius CP_1=2a, draw on arc to intersect the line DC produced at P_2.
4. Similarly, locate the points P3 and P_4.

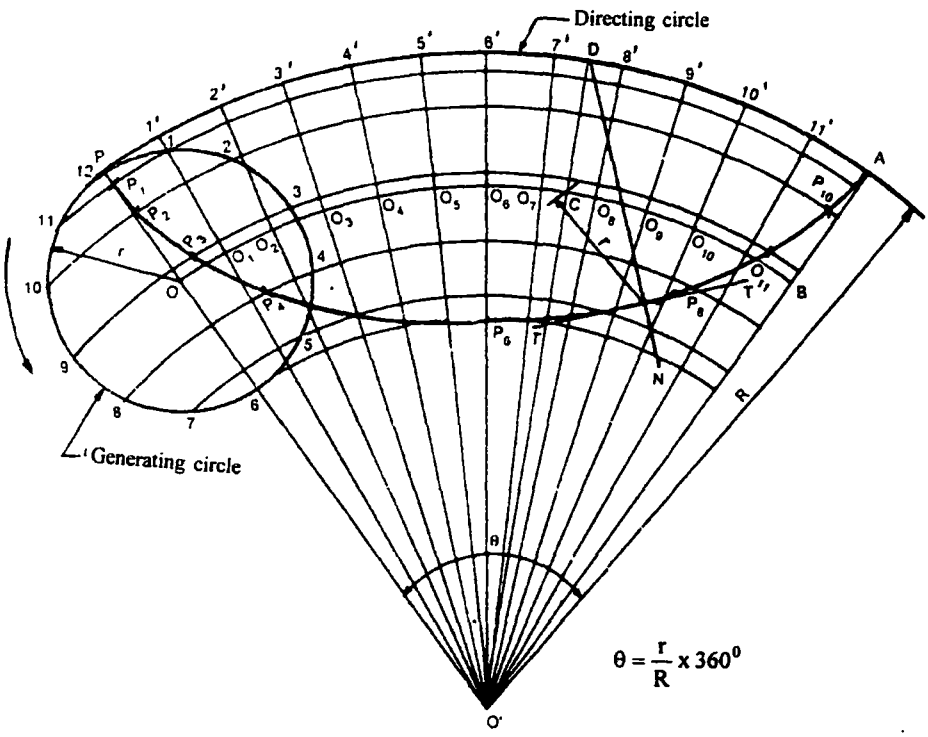

Fig. 4.43 Construction of a Hypo-Cycloid

The curve through A, P_1, P_2, P_3 and P_4 is the required involute.

A P_4 is equal to the perimeter of the square.

Note : To draw a normal and tangent to the curve at any point, say M on it, as M lies on the arc P_3P_4 with its centre at A, the line AMN is the normal and the line TT drawn through M and perpendicular to MA is the tangent to the curve.

Involutes of a triangle, Pentagon and Hexagon are shown Figs 4.45 to 47

To draw an involute of a given circle of radus R.

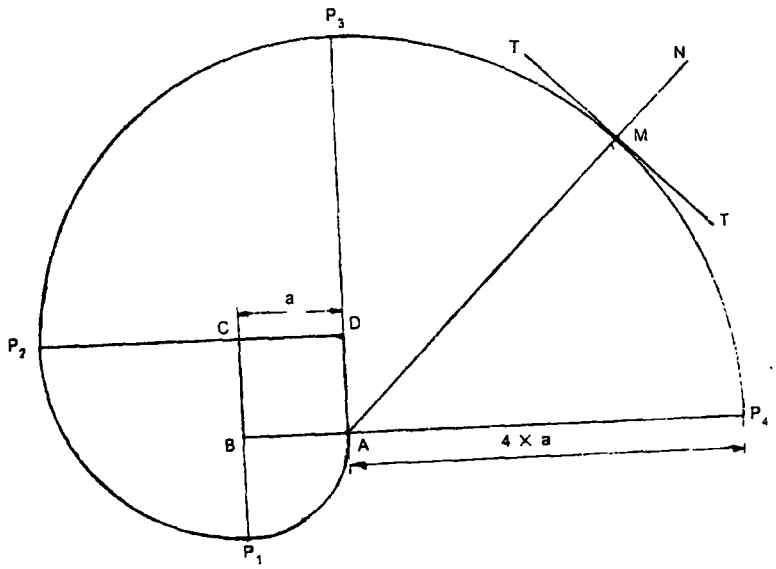

Fig. 4.44

Construction (Fig. 4.48)

1. With O as centre and radius R, draw the given circle.
2. Taking P as the starting point, draw the tangent PA equal in length to the circumference of the circle.
3. Divide the line PA and the circle into the same number of equal pats and number the points.
4. Draw tangents to the circle at the points 1,2,3 etc., and locate the points P_1, P_2, P_3 etc., such that IP_1 = P11, 2P2 = P21 etc.

   A smooth curve through the points P, P_1, P_2 etc., is the required involute.

Note :

1. The tangent to the circle is a normal to the involute. Hence, to draw a normal and tangent at a point M on it, first draw the tangent BMN to the circle. This is the normal to the curve and

a line TT drawn through M and perpendicular to BM is the tangent to the curve.

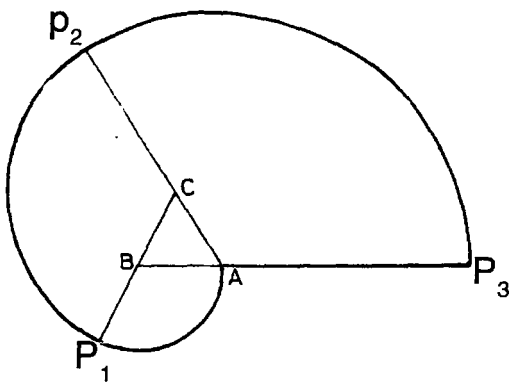

Fig. 4.45

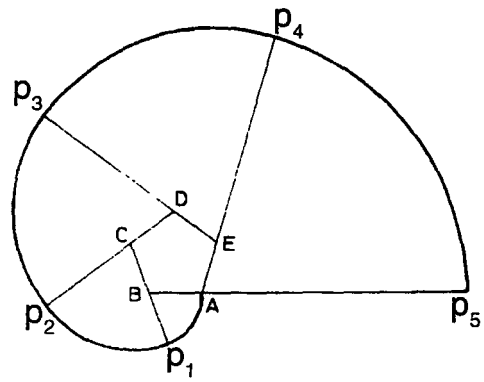

Fig. 4.46

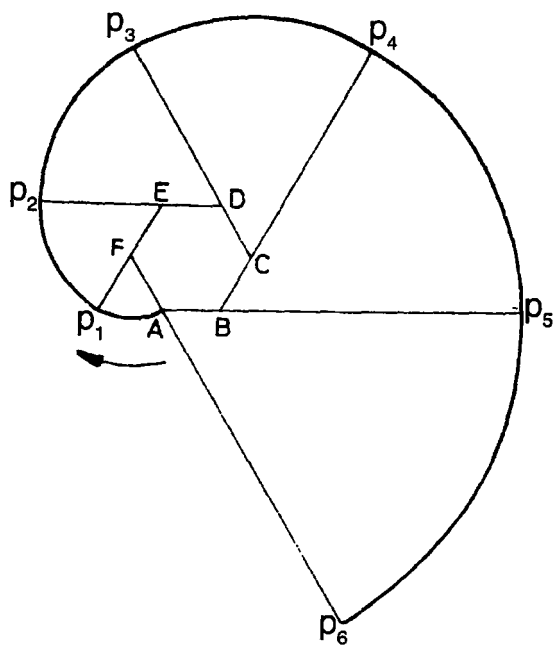

Fig. 4.47

2. The gear tooth profile is normally of the involute curve of circle as shown in Fig 4.49.

EXAMPLES

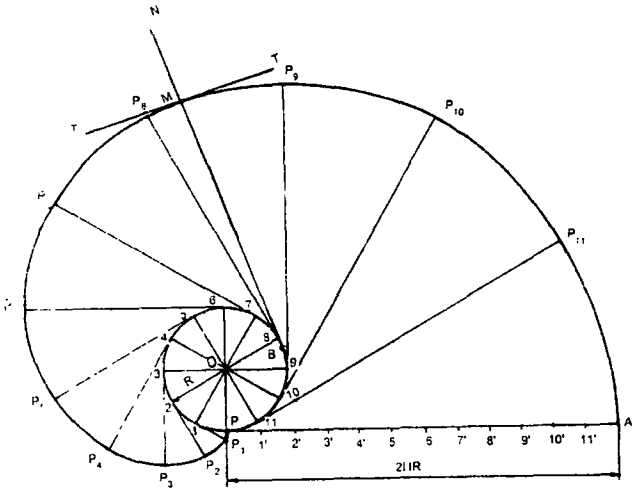

Fig. 4.48

Problem : Construct a conic when the distance of its focus from its directrix is equal to 50 mm and its eccentricity is 2/3. Name the curve, mark its major axis and minor axis. Draw a tangent at any point, P on the curve.

Solution : (Fig. 4.50)

1. As the eccentricity is less than 1, the curve is an ellipse.
2. Draw one directrix, DD and the axis, AA^1 perpendicular to DD and mark the focus, F such that FA = 50 mm.
3. As the eccentricity is 2/3, divide FA into 2 + 3 = 5 equal parts. By definition VF/VA = 2/3 and hence locate the vertex, V. Draw VE perpendicular to the axis such that VE = VF. Join AE and extend it as shown in Fig. 4.50. This is the eccentricity scale, which gives the distances directly in the required ratio. In triangle AVE, VE/VA=VF/VA=2/3
4. Mark any point 1 on the axis and draw a perpendicular through it to intersect AE produced at 1^1. With centre F and radius equal to $1\text{-}1^1$ draw arcs to intersect the perpendicular through

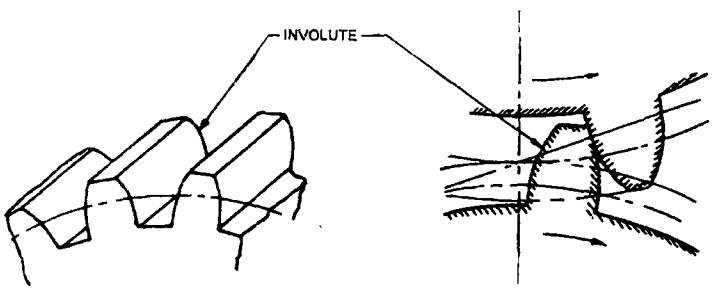

Fig. 4.49 Involute of a circle as gear tooth profile

1 at P_1 both above and below the axis of the conic.

5. Similarly, mark points 2, 3, 4, etc., as described above.
6. Draw a smooth curve passing through the points V, P_1, P_2, etc., which is the required **ellipse.**
7. Mark the centre, C of the ellipse and draw a perpendicular GH to the axis. Also mark the other focus F^1 such that CF = CF^1.

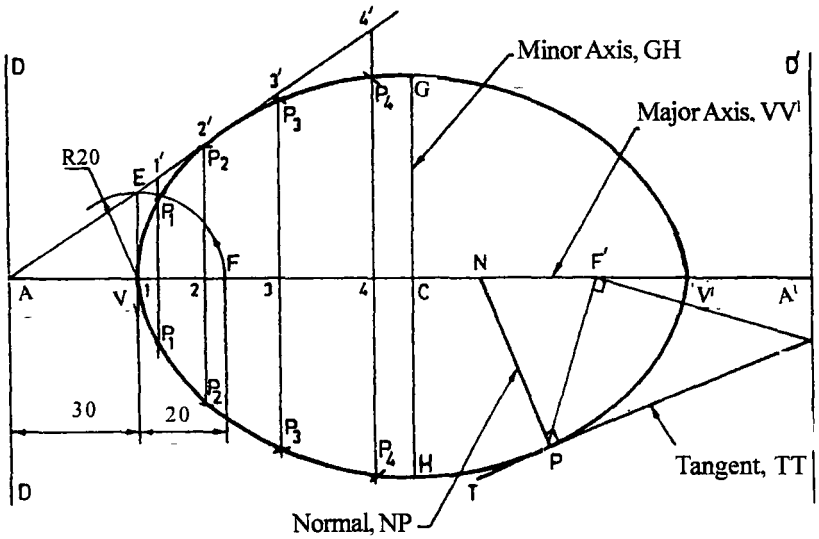

Fig. 4.50 Construction of an Ellipse (given focus and directrix) D'

8. Tangent at any point P on the ellipse can be drawn, by joining P F^1 and by drawing F^1T perpendicular to PF^1. Join TP and extend. Draw NP perpendicular to TP. Now, TPT and NPN are the required tangent and normal at P respectively.

Problem : The foci of an ellipse are 90 mm apart and the major axis is 120 mm long. Draw the ellipse by using four centre method.

Solution : **(Fig. 4.51)**

1. Draw the major axis AB = 120 mm. Draw a perpendicular bisector COD. Mark the foci F and F^1 such that FO = F^1O = 45 mm.
2. With centre F and radius = AO = 60 mm draw arcs to cut the line COD at C and D as shown in Fig. 4.51. Now, CD is the minor axis.
3. Join AC .With O as centre and radius = OC draw an arc to intersect the line AB at E.
4. With C as centre and AE as radius draw an arc to intersect the line AC at G.
5. Draw a perpendicular bisecator of the line AG to intersect the axis AB at O_1 and the axis CD(extended) at O_2. Now O_1 and O_2 are the centres of the two arcs. The other two centres O_3 and O_4 can be located by taking $OO_3 = OO_1$ and $OO_4 = OO_2$. Also locate the points 1, 2, 3 and 4 as shown.

6. With centre O_3 and radius = O_3B draw an arc 4B3 and with centre O_2 and radius = O_2C draw an arc 1C4.
7. Similarly draw arcs for the remaining portion and complete the ellipse.

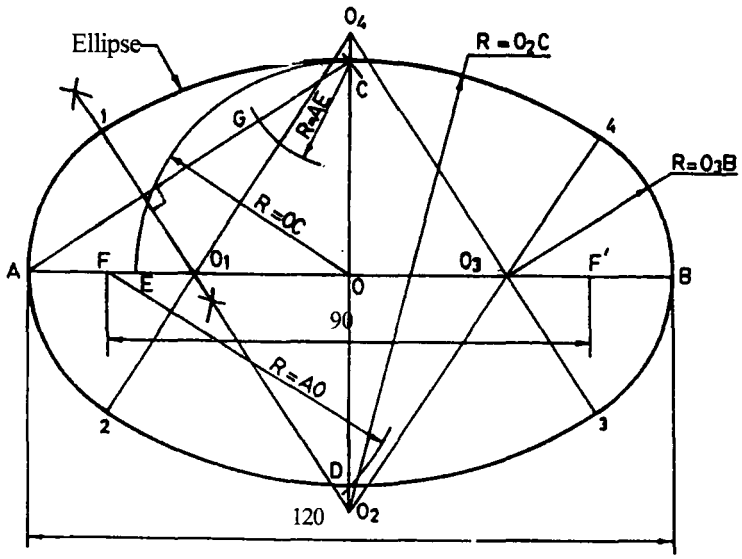

Fig. 4.51 Construction of an Ellipse (four-centre method)

Problem : *Construct an ellipse when its major axis is 120mm and minor axis is 80mm.*

Solution : **(Fig.4.52)**

1. Take a strip of paper (Tramel) and mark PQ = half the minor axis and PR = half the major as shown.
2. Draw AB = 120 mm to represent the major axis and bisect it at O. Through O draw a vertical CD = 80 mm to represent the minor axis.
3. Keep the trammel such that Q is lying on the major axis and R on the minor xis. Now the position of the point P is one of the points on the ellipse.
4. Then change the position of the trammel such that Q and R always lie on AB and CD respectively. Now the new position of the pint P is another point to construct the ellipse.
5. Repeat the above and rotate the trammel for 360°, always keeping Q along AB and R along CD.
6. For different positions of Q and R, locate the positions of point P and draw a smooth ellipse.

Problem : *Construct an ellipse when its major axis is 90 mm and minor axis is 55 mm.*

Solution : **(Fig.4.53)**

1. Draw the major axis AB = 90 mm and bisect it at O. Through O draw a vertical line CD = 55 mm.
2. To represent diameters draw two concentric circles.
3. Divide the circles into 12 number of equal parts and draw the radial lines. These radial lines

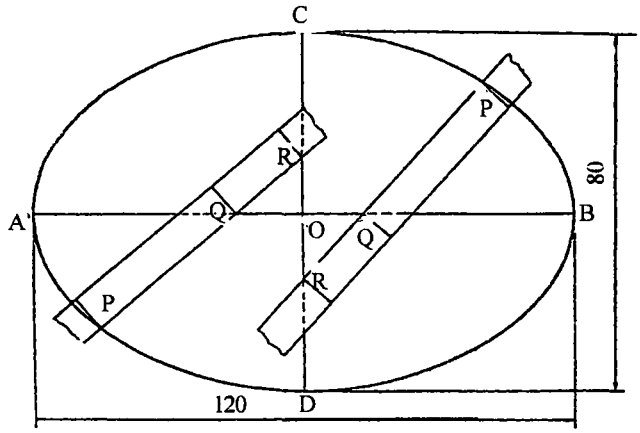

Fig. 4.52 Trammel Method

intersect the major and minor axes circles at 1, 2, ... 12 and 1^1, 2^1,....12^1 respectively.

4. From 1 draw a vertical line (parallel to CD) and from 1^1 draw a horizontal line (parallel to AB). Both intersect at P_1.
5. Repeat the abve and obtain the points P_2,....P_{12} corresponding to 2 and 2^1,...12, and 12^1 respectively.
6. Draw a smooth ellipse through P_1,P_2,.....P_{12}, P_1.

Problem : A ground is in the shape of a rectangle 120 m X 60 m. Inscribe an elliptical lawn in it to a suitable scale.

Solution : **(Fig.4.54)**

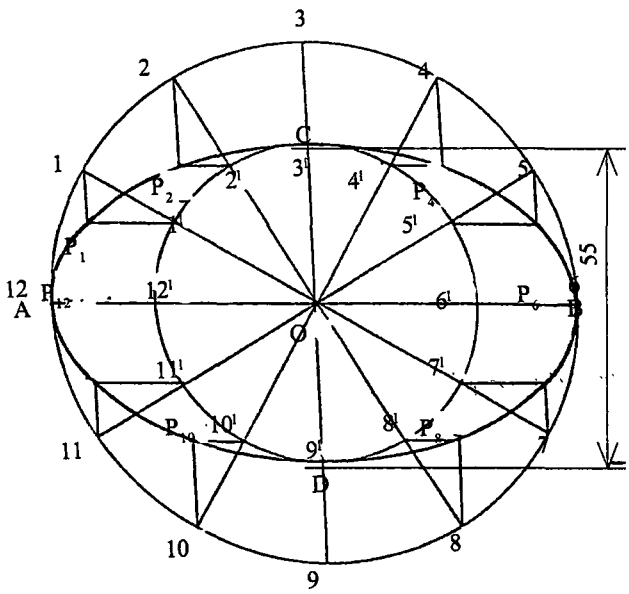

Fig. 4.53 Concentric circles Method

1. Draw the major axis AB = 120 m and minor axis CD = 60 m. Both axes bisect each other at O.
2. Through A and B draw lines parallel to CD.
3. Through C and D lines parallel to AB and construct the rectangle PQRS. Now PS=AB and SR = CD.
4. Divide AQ and AP into any number of equal parts (4 say) and name the points as 1, 2, 3 and 1^1 2^1 3^1 respectively starting from A on AQ and AP.
5. Divide AO into same number of equal parts, and name the points as 1_1, 2_1, 3_1 starting from A on AO.
6. Join 1, 2, 3 with C. Join $D1_1$ and extend it to intersect at P_1.
7. Similarly extend $D2_1$ and $D3_1$ to intersect C2 and C3 at P_2 and P_3 respectively. Join 1^1,2^1,3^1 with D.
8. Join $C1_1$ and extend it to intersect $D1^1$, at $P_1^{'}$.

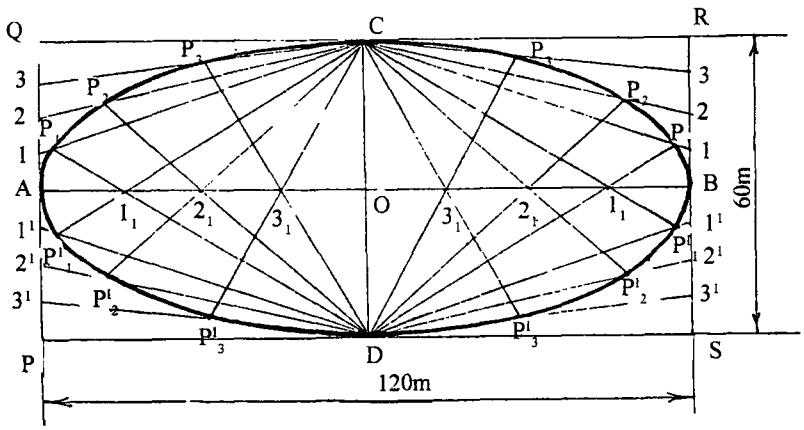

Fig. 4.54 Rectangle (or) Oblong Method

9. Similarly extend $C2_1$ and $C3_1$ to intersect $D2^1$ and $D3^1$ at P_2^1 and P^1_3 respectively.
10. Draw a smooth curve through C, P_3, P_2, P_1, A, $P_1^{'}$, $P_2^{'}$, $P_3^{'}$, D and obtain one half (left-half) of the ellipse.
11. Repeat the above and draw the right-half of the ellipse, which is symmetrical to the left-half.

Problem : Construct an ellipse when a pair of conjugate diameters AB and CD are equal to 120 mm and 50 mm respecitively. The angle between the conjugate diameters is 60^0.

Solution : **(Fig. 4.55)**

To construct the ellipse using conjugate diameters :

1. Draw a conjugate diameter AB = 120 mm and bisect it at O.
2. Angle between the conjugte diameters is 60^0. Therefore draw another conjugate diameter CD through O such that the angle COB = 60^0.

3. Through A and B draw lines parallel to CD. Through C and D draw lines parallel to AB and construct a parallelogram PQRS as shown in Fig. 4.55.
4. Repeat the procedure given in steps 4 to 10 in above problem and complete the construction of the ellipse inside the parallelogram PQRS.

Problem : Construct a conic when the distance between its focus and its directrix is equal to 60 mm and its eccentricity is one. Name the curve. Draw a tangent at any point on the curve.

Solution : **(Fig.4.56)**

1. As the eccentricity of the conic is one, the curve is a **parabola.**
2. Draw the directrixDD and the axis AB perpendicular to DD. Mark the focus F such that

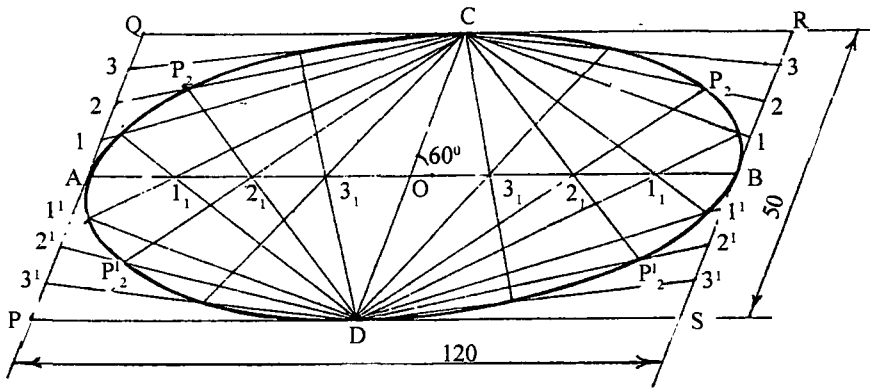

Fig. 4.55 Parallelogram Method

AF = 60 mm. By definition, VF/VA = 1 and hence mark the point V, the vertex at the midpoint of AF as shown in Fig.4.56.

3. Mark any number of points (say 6) on VB and draw verticals through these points.
4. With F as centre and A1 as radius draw an arc to cut the vertical through point 1 at P_1. Similarly obtain points P_2, P_3, P_4, etc.
5. Draw a smooth curve passing through these points to obtain the required parabola.
6. Tangent at any point P on the parabola can be drawn as follows. From point P draw the ordinate PE. With V as centre and VE as radius draw a semicircle to cut the axis produced at G. Join GP and extend it to T. Draw NP perpendicular to TP. Now, TPT and NPN are the required tangent and normal at P.

Problem : A ball thrown from the ground level reaches a maximum height of 5 m and travels a horizontal distance of 12 m from the point of projection. Trace the path of the ball .

Solution : **(Fig.4.57)**

1. The ball travels a horizontal distance of 12 m. By taking a scale of 1:100, draw PS = 12 cm to represent the double ordinate. Bisect PS at O.
2. The ball reaches a maximum height of 5 m. So from O erect vertical and mark the vertex V

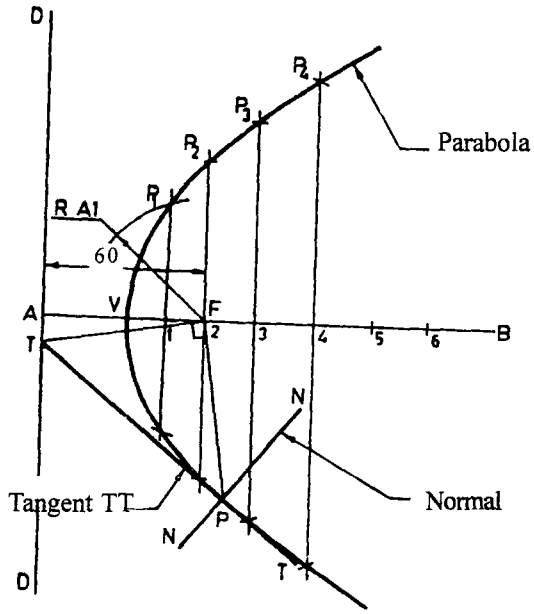

Fig. 4.56 Construction of a Parabola

such that OV = 5cm. Now OV is the abscissa.

3. Construct the rectangle PQRS such that PS is the double ordinate and PQ = RS = VO(abscissa).
4. Divide PQ and RS into any number of (say 8) equal parts as 1, 2,... 8 and 1^1 2^1 ....8^1 respectively, starting from P on PQ and S on SR. Join 1, 2, ...8 and 1^1 ,2^1 ....8^1 with V.
5. Divide PO and OS into 8 equal parts as 1_1 2_1 .....8_1 and 1^1_1 2^1_1 .....8^1_1 respectively, starting from P on PO and from S on SO.
6. From 1_1 erect vertical to meet the line V1 at P_1.
7. Similarly from 2_1, ...8_1 erect verticals to meet the lines V2, ...V8 at P_2....P_8 respectively.
8. Also erect verticals from 1^1_1 2^1_1 .....8^1_1 to meet the lines $V1^1$ ....$V2^1$ .....$V8^1$ at P_1^1 ....P_2^1 .....$P8^1$ respectively.
9. Join P, P_1, P_2, ... P^1_7.V_1.....P^1_1 and S to represent the path of the ball which is a **parabola.**

Problem : Draw a parabolic arc with a span of 1000 mm and a rise of 800 mm. Use rectangular method. Draw a tangent and normal at any point P on the curve.

Solution : **(Fig.4.58)**

1. Draw an enclosing rectangle ABCD with base AB = 1000 mm and height BC = 800 mm using a suitable scale.
2. Mark the axis VH of the parabola, where V is the vertex and mid point of line CD. Divide DV and AD into the same number of equal parts (say 4).
3. Draw a vertical line through the point 1^1 lying on the line DV. Join V with 1 lying on the line

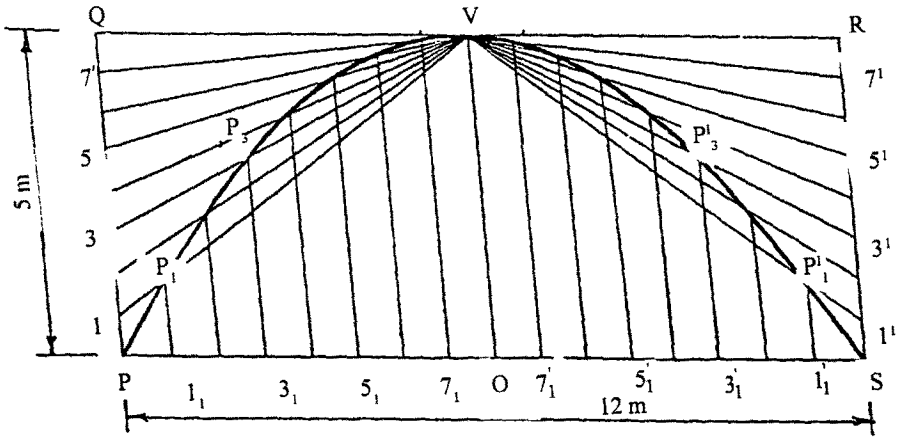

Fig. 4.57 Rectangle Method

AD. These two lines intersect at point P_1 as shown in Fig. 4.58.

4. Similarly obtain other points P_2, P_3, etc.
5. Draw a smooth curve passing through these points to obtain the required parabola.

Problem : Construct a parabola within a parallelogram of sides 120mm X 60 mm. One of the included angle between the sides is 75°.

Solution : **(Fig.4.59)**

1. Construct the parallelogram PQRS (PS = 120 mm PQ = 60 mm and angle QPS = 75°). Bisect PS at O and draw VO parallel to PQ.

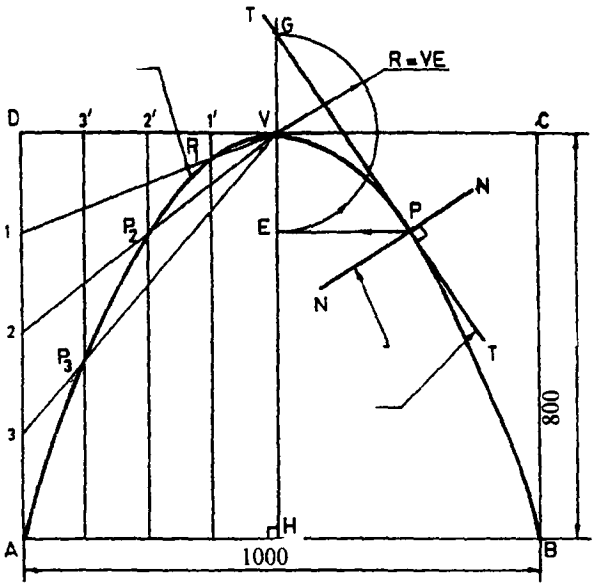

Fig. 4.58

2. Divide PO and SR into any number of (4) equal parts as 1, 2, 3 and 1^1, 2^1, 3^1 respectively starting from P on PQ and from S on SR. Join V1, V2 & V3. Also join $V1^1$, $V2^1$, $V3^1$
3. Divide PO and OS into 4 equal parts as 1_1, 2_1, 3_1 and 1^1_1, 2^1_1, 3^1_1 respectively starting from P on PO and from S on SO.
4. From 1_1 draw a line parallel to PQ to meet the line V1 at P_1. Similarly obtain the points P_2 and P_3.
5. Also from 1^1_1, 2^1_1, 3^1_1 draw lines parallel to RS to meet the lines $V1^1$, $V2^1$, and $V3^1$ at P_1^1, P_2^1, and P_3^1 respectively and draw a smooth parabola

Problem : A fountain jet discharges water from ground level at an inclination of 55^0 to the ground. The jet travels a horizontal distance of 10 m from the point of discharge and falls on the ground. Trace the path of the jet.

Solution : **(Fig.4.60)**

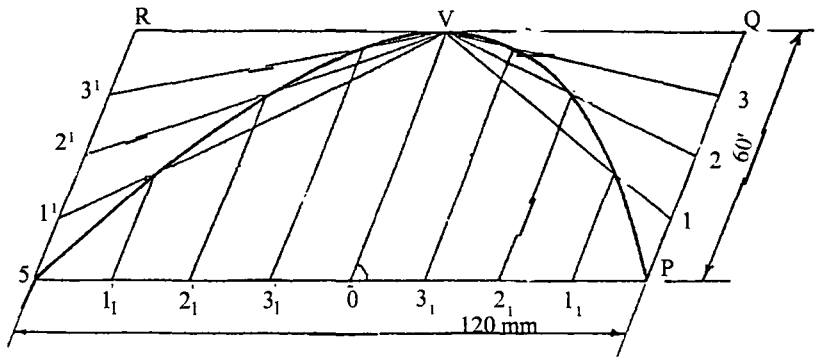

Fig. 4.59

1. Taking the scale as 1:100 draw PQ = 10 cm . Jet discharges water at 55^0 to the ground. So, at P and Q draw 55^0 lines to intersect at R. PQR is an isosceless triangle.
2. Bisect PQ at O. At O, erect vertical to pass through R. Bisect OR at V, the vrtex.
3. Divide PR into any number of (say 8) equal parts as 1, 2, ...7 starting from P on PR. Divide RQ into same number of (8) equal parts as 1^1, 2^1 .... 7^1 starting from R on RQ.
4. Join $1,1^1$ and also $7,7^1$. Both will meet the vertical OR at a point. Join 2, 2^1, and also 6, 6^1,. Both will meet the vertical OR at another point. Join 3, 3^1 and also $5,5^1$. Both will meet the vertical OR at a third point. Join $4,4^1$ and it will meet the vertical OR at V.
5. Draw a smooth parabola through P, V, Q such that the curve is tangential to the lines 11^1, 22^1,....77^1.

Problem : Construct a conic when the distance of any point P between the focus and the directrix is constant and is equal to 50mm and its eccentricity is 3/2. Name the curve. Draw a tangent and a normal at any point on the curve.

Solution : **(Fig.4.61)**

1. As the eccentricity is greater than 1; the curve is a hyperbola. Draw one directirx DD and mark the focus F such that FA = 50 mm.
2. As the eccentricity is 3/2, divide FA into 3 + 2 = 5 equal parts. By difinition VF/VA = 3/2 and hence locate the vertexV.

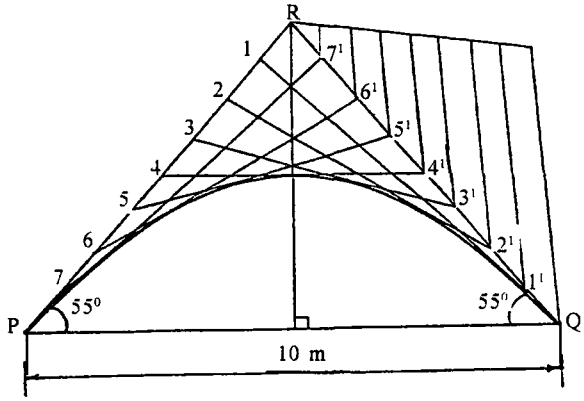

Fig. 4.60

3. Draw VE perpendicular to the axis such that VE = VF. Join AE and extend it as shown in Fig.4.61.
4. This is the eccentricity scale, which gives the distances in the required ratio. In triangle AVE, EF/VA = VF/VA = 3/2
5. Mark any point 1 on the axis and proceed further as explained in earlier to get the points P_1, P_2, P_3, etc. Draw a smooth curve passing through the points V, P_1, P_2, P_3, etc. which is the required hyperbola.
6. Tangent and normal at any point P on the hyperbola can be drawn as shown.

Problem : Two points F_1 and F_2 are located on a plane sheet 100 mm apart. A point P on the curve moves such that the difference of its distances from F_1 and F_2 always remains 50 mm. Find the locus of the point and name the curve. Mark asymptotes and directrices.

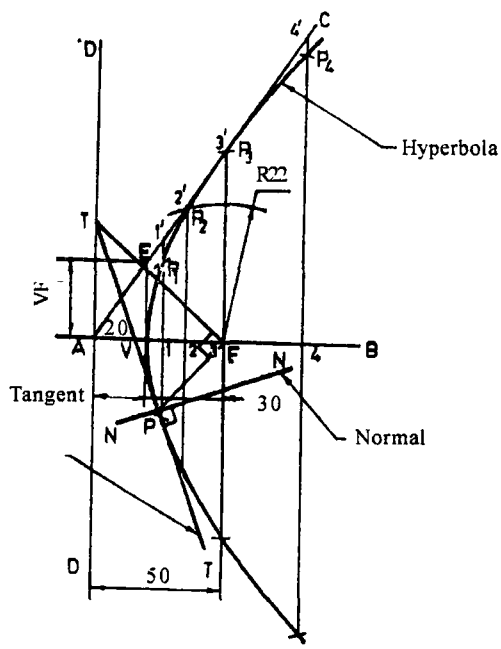

Fig. 4.61

locus of the point and name the curve. Mark asymptotes and directrices.

Solution : **(Fig. 4.62)**

1. A curve traced out by a point moving in the same plane in such a way that the difference of the distances from two fixed points is constant, is called a hyperbola.
2. Draw a horizontal line and mark the fixed points F_2 and F_1 in such a way that F_2F_1 = 100 mm. Draw a perpendicular bisector C_1OC_2 to F_2F_1 as shown in Fig. 4.62.
3. Mark the points V_2 and V_1 on the horizontal line such that V_2V_1 = 50 mm and $V_2O = V_1O$.
4. With centre O and radius equal to F_2O draw a circle. Draw tangents at V_2 and V_1 to intersect the above circle at J, M, K and L as shown. Draw a line joining JOL and produce it and this line is one asymptote.
5. The other asymptote is the line passingt through KOM.
6. Mark any number of points 1, 2, 3, etc., on the axis of the hyperbola. With F_2 as centre and radius equal to $2V_2$ draw an arc to cut the arc drawn with F_1 as centre and radius equal to $2V_1$. The point of intersection is marked as P_2. Similarly obtain other points of intersection P_1 P_3 P_4, etc. It may be noted that $P_2F_2 - P_2F_1 = P_3F_2 - P_3F_1$ = 50 mm. Draw a smooth curve passing through the points V, P_1 P_2 P_3, etc., which is the required hyperbola. Also

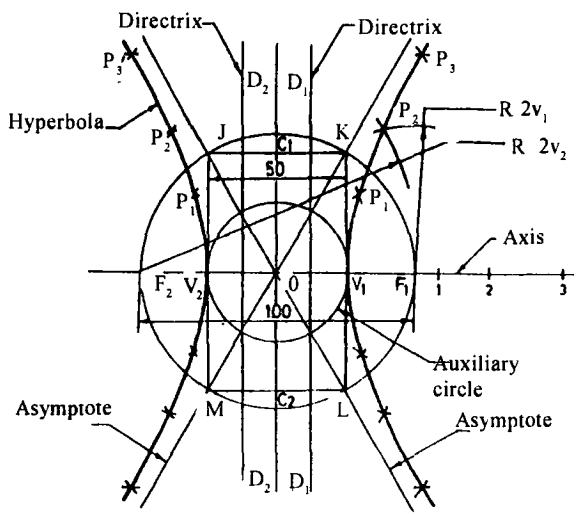

Fig. 4.62 Construction of a Hyperbola
(given fixed points and the dirference of the distances)

draw another hyperbola on the other side of the axis as shown.

Problem : Draw a hyperbola when its double ordinate is 90 mm, abscissa is 35mm and half the transverse axis is 45 mm.

Solution : **(Fig.4.63)**

1. Draw OBQ such that OB = half the transverse axis = 45mm and BQ = abscissa = 35mm.

Through Q erect vertical such that PP^1 = double ordinate = 90mm = 2PQ.

2. Construct the rectangle PP^1R^1R. Divide PR and P^1R^1 into any number of equal parts (say 4) as 1, 2, 3, and 1^1 2^1 3^1 starting from P on PR and P^1 on P^1 R^1 respectively. Join B1, B2, B3, $B1^1$, $B2^1$ and $B3^1$.
3. Divide the ordinates PQ and QP^1 into the same number of equal parts as 1_1 2_1 3_1 and 1_1^1 2_1^1 3_1^1 starting from P on PQ and P^1 on P^1Q respectively.
4. Join 01_1 to meet B1 at P_1. Join 02_1 and 03_1 to meet B2 and B3 at $P_2$and P_3 respectively, Similarly join 01^1_1 02^1_1 and 03^1_1 to meet $B1^1$ $B2^1$ $B3^1$ at P^1_1 P^1_2 P^1_3 respectively.
5. Join P, P_1 , P_2 , P_3 , B, P^1_3 , P^1_2 , P^1_1 and P^1 by a smooth hyperbola.

Problem : Construct a rectangular hyperbola when a point P on it is at a distance of 30 mm and 40 mm resepctively from the two asymptotes.

Solution : **(Fig.4.64)**

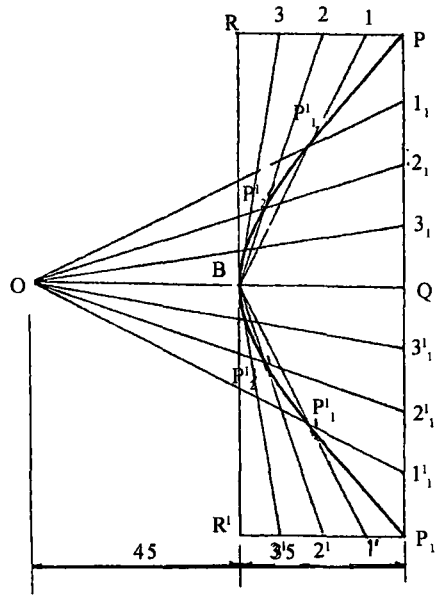

Fig. 4.63

1. For a rectangular hyperbola, angle between the asymptotes is 90°. So, draw OR_1 and OR_2 such that the angle R_1OR_2 is 90°.
2. Mark A and B along OR_2 and OR_1 respectively such that OA = 40 mm and OB = 30 mm. From A draw AX parallel to OR_1 and from B draw BY parallel to OR_2. Both intersect at P.
3. Along BP mark 1, 2, and 3 at approximately equal intervals. Join O1, O2, and O3, and extend them to meet AX at 1_1, 2_1 and 3_1 respectively.
4. From 1_1 draw a line parallel to OR_2 and from 1 draw a line parallel to OR_1. From 2 and 3 draw lines parallel to OR_1. They intersect at P_2 and P_3 respectively.
5. Then along PA mark points 4_1 and 5_1 at approximately equal inervals. Join $O4_1$ and $O5_1$ and extend them to meet BY at 4 and 5 respectively.

6. From 4_1 and 5_1 draw lines parallel to OR_2 and from 4 and 5 draw lines parallel to OR_1 to intersect at P_4 and P_5 respectively
7. Join P_1, P_2, P_3, P, P_4, P_5 by smooth rectangular hyperbola.

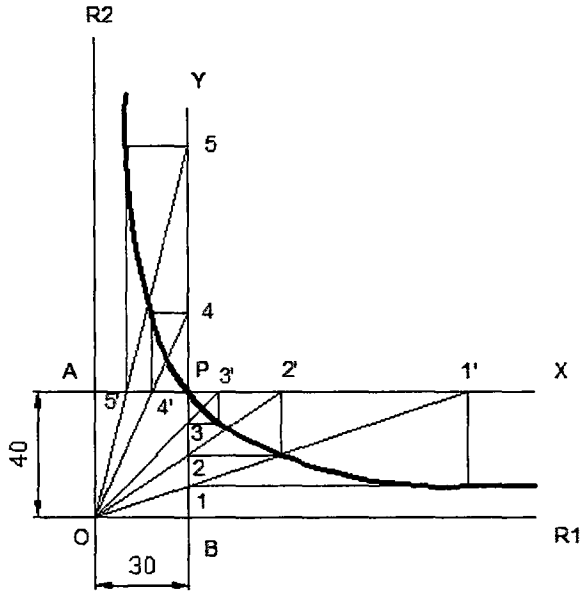

Fig. 4.64 Rectangular Hyperbola

Problem : Draw an epicycloid having a generating circle of diameter 50 mm and a directing curve of radius 100 mm. Also draw a normal and a tangent at any point M on the curve.

Solution : **(Fig.4.65)**

1. Let, AB be the circumference of the generating circle of radius, r = 25 mm. Let, θ be the angle subtended at the centre of the directing (base) circle of radius = 100 mm by the arc AB. Then,

   (Angle AOB)/360° = (Arc, AB/(Circumference of directing circle)

   i.e. $\theta/360 = (2\pi r)/(2\pi R)$

   $= (2\pi \times 25)/2\pi \times 100)$

   $\therefore \quad \theta = (25 \times 360^0)/100$

   $= 90^0$

2. Draw the arc AB with centre O and radius = 100 mm in such a way that the angle AOB = 90°. Join OA and extend it to C such that AC is equal to the radius of the rolling circle.
3. With centre C_2 and radius = 25 mm draw the rolling circle. Draw an arc C_aC_b with centre O and radius = OC_a. Here, C_aC_b represents the locus of the centre of the rolling circle.
4. Divide the rolling circle into any number of equal parts (say 12). Also divide the arc C_aC_b into the same number of equal parts and mark the points as C_1, C_2, C_3, etc., as shown in Fig. 4.65

5. The required curve (epicycloid) is the path of the point P on the circumference of the circle which rolls over C_a C_b. Let P_o be the initial position of the point P and it coincides with the point A. When the rolling circle rolls once on arc AB, the point P will coincide with B and it is marked by P_o.
6. The intermediate positiions of the point P such as P_1, P_2, P_3, P_4, etc., can be located as follows. Draw arcs through points 1, 2, 3, etc. To get one of the intermediate positions of the point P (say P_4), with centre C_4 draw an arc of radius equal to 25 mm to cut the arc through the point 4 at P_4.

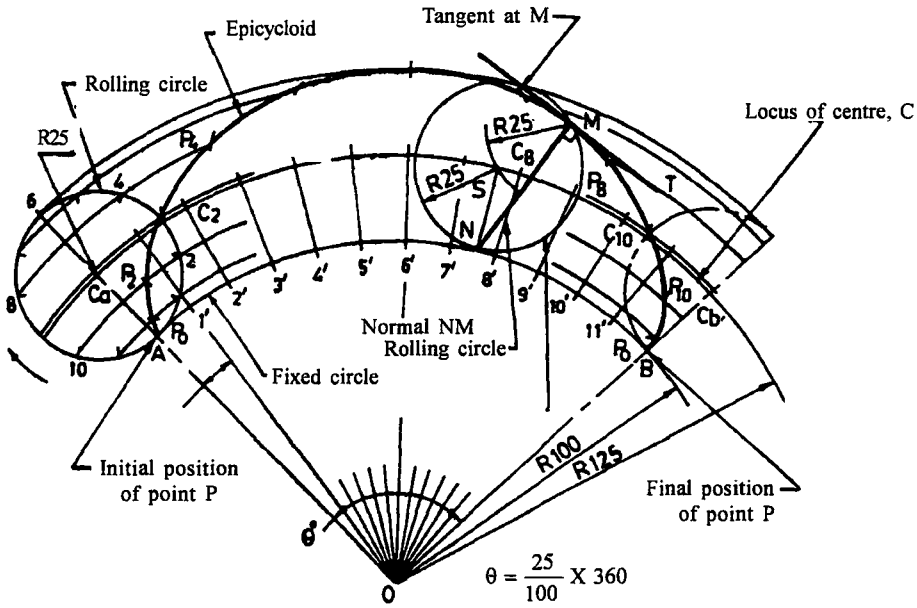

Fig. 4.65 Epicycloid

7. Similarly obtain other intermediate points P_1 P_2 P_3, etc.
8. Draw a smooth curve passing through all these points to get the required epicycloid.
9. To daw a tangent at any point M on the curve, with centre M draw an arc of radius equal to 25mm to cut the arc C_a C_b at S. From point S, Join NM which is the required normal to the curve.
10. Draw a line TMT perpendicular to NM. Now, TMT is the required tangent at M.

Problem : Draw an epicycloid of rolling circle of diameter 40 mm which rolls outside another circle (base circle) of 150 mm diameter for one revolution. Draw a tangent and normal at any point an the curve.

Solution : **(Fig.4.66)**

1. In one revolution of the generating circle, the generatin point P will move to a point Q, so that the arc PQ is equal to the circumference of the generating circle. θ is the angle subtended by the arc PQ at the centre O.

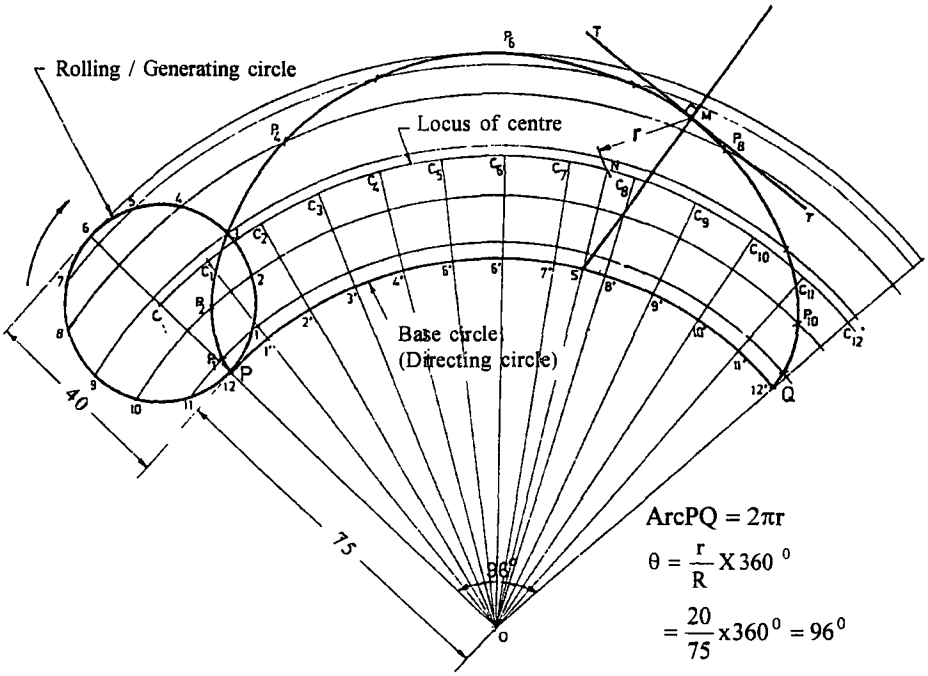

Fig. 4.66 Epicycloid

$$\text{To calculate}\,\theta : \frac{P\hat{O}Q}{360^0} = \frac{\text{Arc PQ}}{\text{circumference of directing circle}} = \frac{2\pi}{2\pi}\frac{r}{R} = \frac{r}{R}$$

$$\therefore P\hat{O}Q = \theta \times 360^\circ = \frac{r}{R} \text{ x } 360^0 = \frac{20}{75} \text{ x } 360 = 96^0$$

2. Taking any pont O as centre and radius (R) 75 mm, draw an arc PQ which subtends an angle $\theta = 96^0$ at O.
3. Let P be the generating point. On OP produced, mark PC = r = 20 mm = radius of the rolling circle. Taking centre C and radius r (20 mm) draw the rolling circle.
4. Divide the rolling circle into 12 equal prats and name them as 1, 2, 3, etc., in the counter clock wise direciton, since the rolling circle is assumed to roll clockwise.
5. With O as centre, draw concentric arcs passing through 1, 2, 3, ... etc.
6. With O as centre and OC as radius draw an arc to represent the locus of centre.
7. Divide the arc PQ into same number of equal parts (12) and name them as $1^1\ 2^1$ .. etc.
8. Join $O1^1$, $O2^1$.... etc., and produce them to cut the locus of centre at C_1, C_2 ... etc.
9. Taking C_1 as centre and radius equal to r, draw an arc cutting the arc through 1 at P_1. Similarly obtain the other points and draw a smooth curve through them.

Problem : *Draw a hypocycloid having a generating circle of diameter 50 mm and directing circle of radius 10 mm. Also draw a normal and a tangent at any point M on the curve.*

Solution : **(Fig.4.67)**

The construction of a hypocycloid is almost the same as that for epicycloid. Here, the centre of the generating circle, C_a is inside the directing circle. The tangent and the normal drawn at the point M on the hypocycloid is shown in Fig.4.67

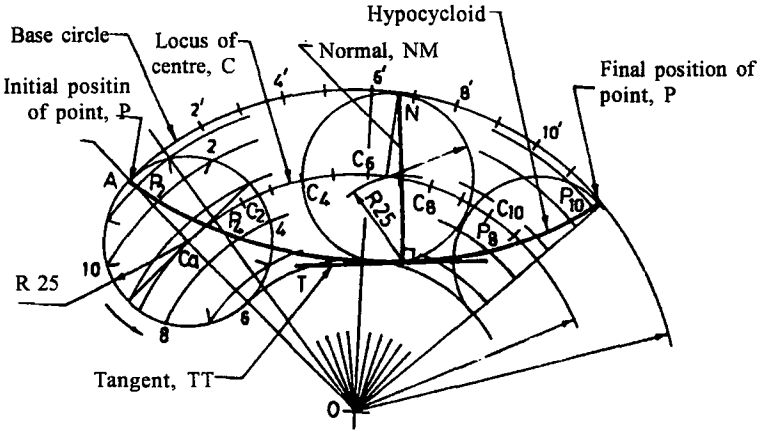

Fig. 4.67 Hypocycloid

Problem : *Draw a hypocycloid of a circle of 40 mm diameter which rolls inside another circle of 200 mm diameter for one revolution. Draw a tangent and normal at any point on it.*

Solution : **(Fig.4.68)**

1. Taking any point O as centre and radius (R) 100 mm draw an arc PQ which subtends an angle $\theta = 72^0$ at O.
2. Let P be the generating point. On OP mark PC = r = 20 mm, the radius of the rolling circle.
3. With C as centre and radius r (20 mm) draw the rolling circle. Divide the rolling circle into 12 equal parts as 1, 2, 3 etc., in clock wise direction, since the rolling circle is assumed to roll counter clock wise.
4. With O as centre, draw concentric arcs passing through 1, 2, 3 etc.
5. With O as centre and OC as radius draw an arc to represent the locus of centre.
6. Divide the arc PQ into same number of equal parts (12) as 1^1 2^1 3^1 etc.
7. Join $O1^1$ $O2^1$ etc., which intersect the locus of centre at $C_1C_2C_3$ etc.
8. Taking centre C_1 and radius r, draw an arc cutting the arc through 1 at P_1. Similarly obtain the other points and draw a smooth curve through them.

To draw a tangent and normal at a given point M:

1. With M as centre and radius r = CP cut the locus of centre at the point N.
2. Join ON and extend it to intersect the base circle at S.
3. Join MS, the normal.
4. At M, draw a line perpendicular to MS to get the required tangent.

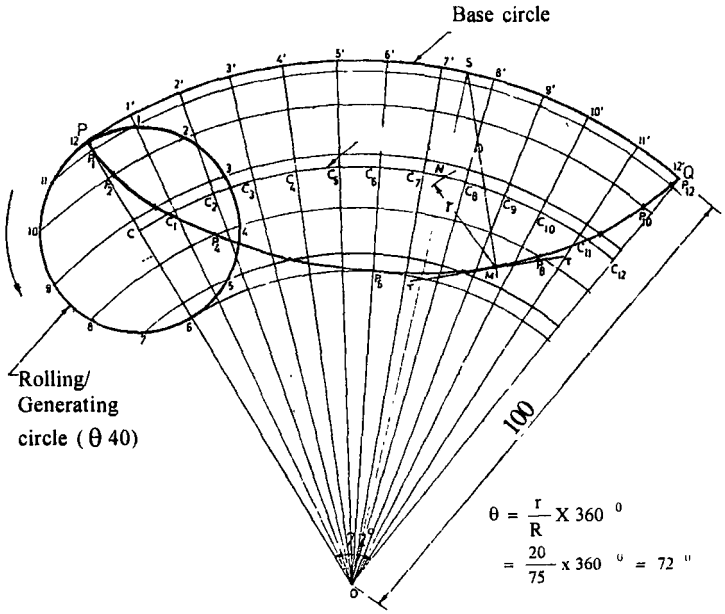

Fig. 4.68

EXERCISES

Ellipse

1. Construct a conic when the distance of its focus from the directrix is equal to 50 mm and its eccentricity is 3/4. Measure its major and minor axes. Draw a tangent at any point on the curve. What is the distance between the foci?
2. The major and minor axes of an ellipse are 80 mm and 50 mm respectively. Construct the curve.
3. Draw an ellipse whose major and minor diameters are 150 mm and 100 mm respectively. Use oblique method. What is the distance between the foci?
4. The foci of an ellipse are 90 mm apart and minor axis is 60 mm. Determine the length of the major axes and draw the ellipse by (a) Concentric circle method, (b) oblong method, (c) trammel method. Draw a tangent and normal to the curve at a point on it 20 mm above the major axis.
5. A plot of ground is in the shape of a rectangle of size 100 × 60m. Inscribe an elliptical lawn in it.
6. Construct an ellipse, when a pair of conjugate diameters are equal to 90 mm and 60 mm respectively. The angle between the conjugate diameters is 60.
7. Two points AB are 100 mm apart. A point C is 80 mm from A and 60mm from B. Draw an ellipse passing through A,B and C.
8. Draw a four centres approximate ellipse having a major axis of 120 mm and a minor axis of 80 mm.

9. Draw an ellipse of having a major axis of 110 mm and minor axis of 70 mm using the concentric circles method. Draw a tangent at any point on the ellipse.
10. Inscribe an ellipse in a parallelogram of sides 120 mm and 80 mm. The acute angle between the sides in 60°.

Parabola

1. Draw a parabola whose focus is at a distance of 50 mm from the directrix. Draw a tangent and normal at any point on it.
2. A highway bridge of parabolic shape is to be constructed with a span of 10 m and a rise of 5 m. Make out a profile of the bridge by offset method.
3. A ball thrown up in the air reaches a maximum height of 50 m. The horizontal distance traveled by the ball is 80 m. Trace the path of the ball and name it.
4. Construct a parabola if the distance between its focus and directrix is 60 mm. Also draw a tangent to the curve.
5. Construct a parabola whose base is 90 mm and axis is 80 mm using the following methods: (a) Rectangular method (b) Tangent method, (c) Off-set method
6. Draw a parabola if the longest ordinate of it is 50 mm and abscissa is 120 mm. Locate its focus and directrix.
7. A cricket ball thrown reaches a maximum height of 9 m and falls on the ground at a distance of 25 m from the point of projection. Draw the path of the ball. What is the angle of projection?
8. Water comes out of an orifice fitted on the vertical side of a tank and it falls on the ground. The horizontal distance of the point where the water touches the ground, is 75 cm when measured from the side of the tank. If the vertical distance between the orifice and the point is 30 cm, draw the path of the jet of water.

Hyperbola

1. A vertex of a hyperbola is 50 mm from its focus. Draw two parts of the hyperbola; if the eccentricity is 3/2.
2. Two fixed point A and B are 120 mm apart. Trace the locus of a point moving in such a way that the difference of its distances from the fixed points is 80 mm. Name the curve after plotting it.
3. Construct a hyperbola if the distance between the foci is 100 mm and the transverse axis is 70 mm.
4. The asymptotes of a hyperbola are making 700 with each other. A point P on the curve is at a distance of 40 mm from the horizontal asymptote and 50 mm from the inclined asymptote. Plot the curve. Draw a tangent and normal to the curve at any point M.
5. For a perfect gas the relation between the pressure, P and Volume, V is given by Boyle's Law PV = constant. Draw a curve satisfying the above law, if $0.5m^3$ of air under atmospheric pressure is compressed. Name the curve.

Special Curves

1. Construct a cycloid having a rolling circle of 60 mm diameter. Also draw a tangent and normal at any point P on the curve.
2. A circle of 40 mm diameter rolls along a straight line without slipping. Draw the curve traced by a point on the circumference, for (a) one complete revolution and (b) one and a half revolutions of the circle. Name the curve. Draw a normal and tangent to the curve at a point 25 mm from the straight line.
3. A circular wheel of diameter 100 mm rolls over a straight surface without slipping. Draw the curve traced by a point P for one revolution of the wheel. Assume that the critical position of the point P is at the top of the vertical centre line of the wheel. Name the curve.
4. Draw an epicycloid having a generating circle of diameter 75mm and a directing curve of radius 200 mm. Also draw a normal and a tangent at a point P on the curve.
5. Draw a hypocycloid for a rolling circle of diameter 75 mm and a base circle of 250 mm diameter. Draw a tangent and a normal at any point on the curve.
6. Draw an involutes of a hexagon of 30 mm side.
7. The evolute of a curve is a circle of diameter 30mm. Trace the curve.
8. Draw the curve traced out by the end of a straight line 308 mm long as it rolls over the circumference of a circle 98 mm diameter.
9. Draw the involute of an isosceles triangle of sides 20 mm, and the other side 15 mm for one turn.
10. Draw the involute of a semicircle of radius 25 mm.

CHAPTER 5

Orthographic Projections

5.1 Introduction

In the preceding chapters 1 to 4 **plane geometry,** where the constructions of the geometrical figures having only two dimensions are discussed, **solid geometry** is delt with in the following chapters.

Engineering drawing, particularly solid geometry is the graphic language used in the industry to record the ideas and informations necessary in the form of blue prints to make machines, buildings, strutures etc., by engineers and technicians who design, develop, manufacture and market the products.

5.1.1 Projection

As per the optical physics, an object is seen when the light rays called visual rays coming from the object strike the observer's eye. The size of the image formed in the retina depends on the distance of the observer from the object.

If an imaginary transparent plane is introduced such that the object is in between the observer and the plane, the image obtained on the screen is as shown in Fig.5.1. This is called **perspective view** of the object. Here, straight lines (rays) are drawn from various points on the contour of the object to meet the transparent plane, thus the object is said to be **projected** on that plane.

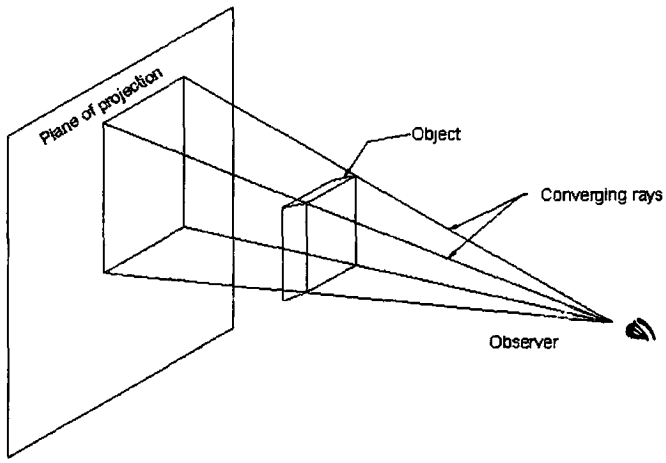

Fig. 5.1 Perspective Projection

The figure or view formed by joining, in correct sequence, the points at which these lines meet the plane is called the projection of the object. The lines or rays drawn from the object to the plane are called projectors. The transparent plane on which the projections are drawn is known as plane of projection.

5.2 Types of Projections

1. **Pictorial projections**
   (i) Perspective projection
   (ii) Isometric projection
   (iii) Oblique projection
2. **Orthographic Projections**

1. **Pictorial Projections**

   The Projections in which the description of the object is completely understood in one view is known as **pictorial projection**. They have the advantage of conveying an immediate impression of the general shape and details of the object, but not its true dimensions or sizes.

2. **Orthographic Projection**

   'ORTHO' means right angle and orthographic means right angled drawing. When the projectors are perpendicular to the plane on which the projection is obtained, it is known as orthographic projection.

5.2.1 Method of Obtaining Front View

Imagine an observer looking at the object from an infinite distance (Fig.5.2). The rays are parallel to each other and perpendicular to both the front surface of the object and the plane. When the observer is at a finite distance from the object, the rays converge to the eye as in the case of perspective projection. When the observer looks from the front surface F or the block, its true shape and size is seen. When the rays or porjectors are extended further they meet the **vertical plane**(V.P) located behind the object. By joining the projectors meeting the plane in correct sequence the **Front view** (Fig. 5.2) is obtained.

Front view shows only two dimensions of the object, Viz. length L and height H. It does not show the breadth B. Thus one view or projection is insufficient for the complete description of the object.

As Front view alone is insufficient for the complete description of the object, another plane called **Horizontal plane** (H.P) is assumed such that it is hinged and perpendicular to V.P and the object is in front of the V.P and above the H.P as shown in Fig.5.3a.

5.2.2 Method of Obtaining Top View

Looking from the top, the projection of the top surface is the **Top view** (T_V). Both top surface and Top view are of exactly the same shape and size. Thus, Top view gives the **True length L** and breadth B of the block but not the height H.

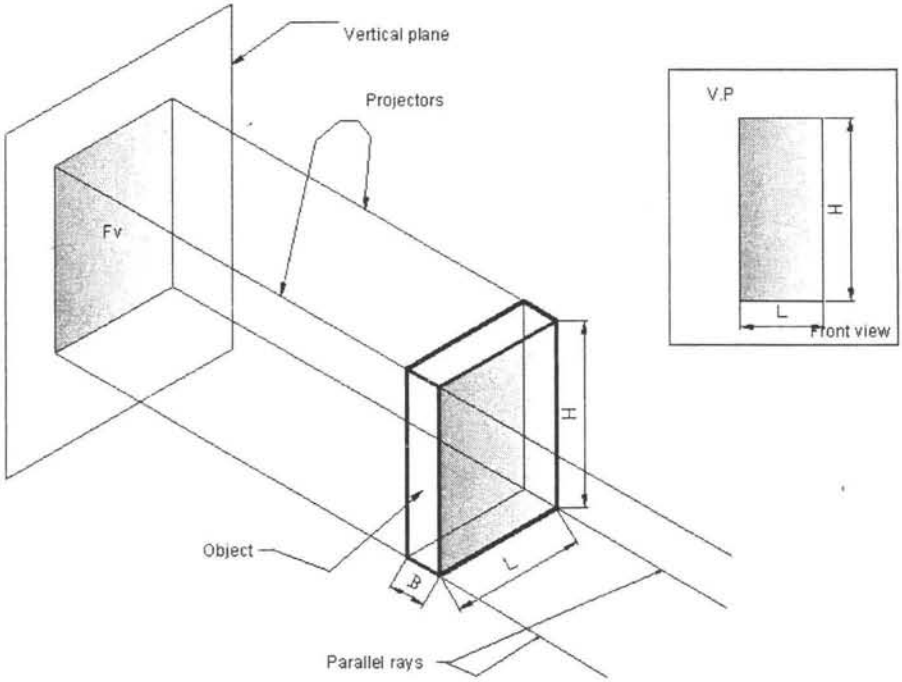

Fig. 5.2 Method of Obtaining Orthographic Front View

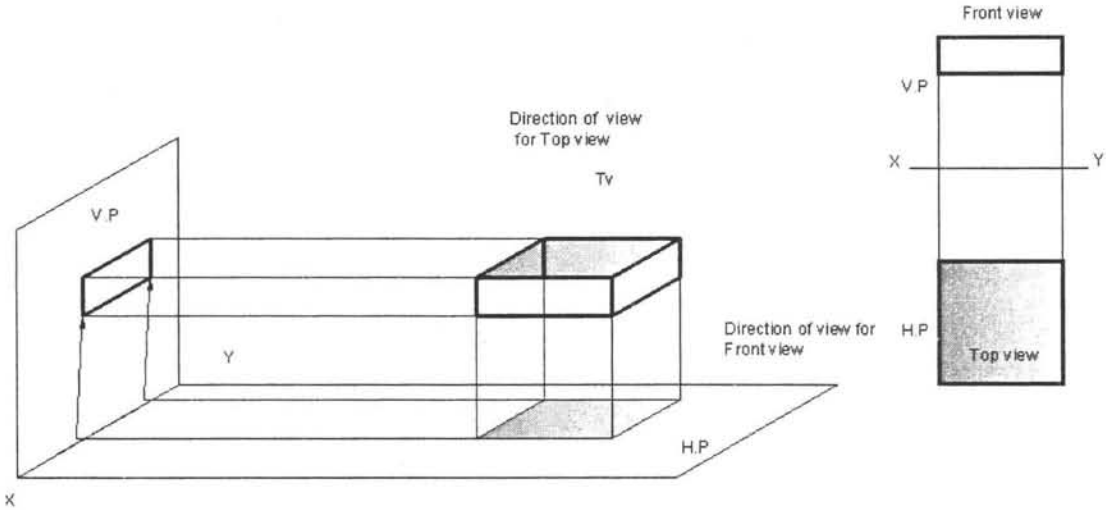

Fig. 5.3 Method of Obtaining Orthographic Top View.

Note (1) Each projection shows that surface of the object which is nearer to the observer. and far away from the plane.

(2) Orghographic projection is the standard drawing form of the industrial world.

X Y Line : The line of intersection of V.P and H.P is called the reference line and is denoted as xy.

Obtaining the Projectin on the Drawing Sheet

It is convention to rotate the H.P through 90^0 in the clockwise direction about xy line so that it lies in the extension of V.P as shown in Fig. 5.3a. The two projections Front view and Top view may be drawn on the two dimensional drawing sheet as shown in Fig.5.3b.

Thus, all details regarding the shape and size, Viz. Length (L), Height(H) and Breadth(B) of any object may be represented by means of orthographic projections i.e., Front view and Top view.

Terms Used

V.P and H.P are called as **Principal planes of projection or reference planes**. They are always transparent and at right angles to each other. The projection on V.P is designated as **Front view** and the projection on H.P as **Top view.**

Four Quadrants

When the planes of projections are extended beyond their line of intersection, they form **Four Quadrants**. These quadrants are numbered as I, II, III and IV in clockwise direction when rotated about reference line xy as shown in Fig.5.4 and 5.6(a).

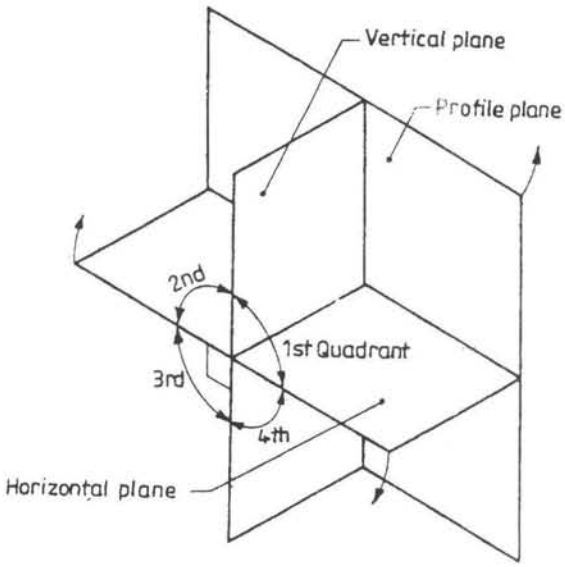

Fig. 5.4 Four Quadrants

In the Figure 5.5 the object is in the **first quadrant** and the projections obtained are **"First angle projections"** i.e., the object lies in between the observer and the planes of projection. Front view shows the length(L) and height(H) of the object, and Top view shows the length(L) and the breadth(B) of it.

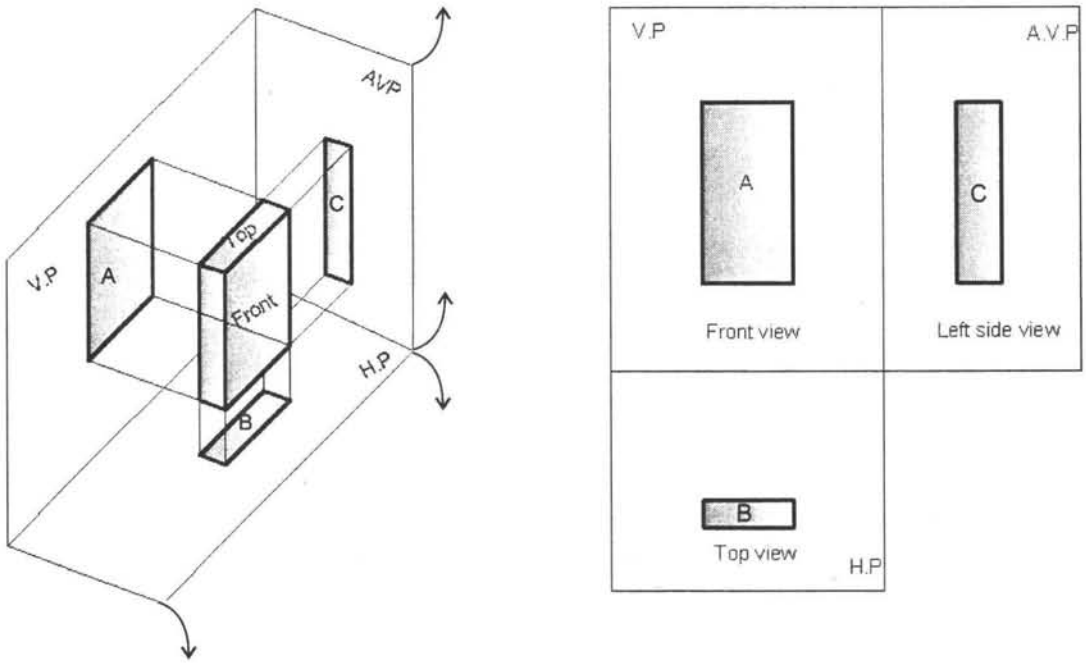

Fig. 5.5 Orthographic Projection of Front, Top and Side views

The object may be situated in any one of four quadrants, its position relative to the planes being described as **in front of V.P** and **above H.P** in the **first quadrant** and so on.

Figure 5.5 shows the two principle planes H.P and V.P and another Auxiliary vertical plane (AVP). AVP is perpendicular to both VP and H.P.

Front view is drawn by projecting the object on the V.P. Top view is drawn by projecting the object on the H.P. The projection on the AVP as seen from the left of the object and drawn on the right of the front view, is called left side view.

5.3 First Angle Projection

When the object is situated in **First Quadrant**, that is, in front of V.P and above H.P, the projections obtained on these planes is called **First angle projection**.

(i) The object lies in between the observer and the plane of projection.

(ii) The front view is drawn above the xy line and the top view below xy. (above xy line is V.P and below xy line is H.P).

(iii) In the front view, H.P coincides with xy line and in top view V.P coincides with xy line.

(iv) Front view shows the length(L) and height(H) of the object and Top view shows the length(L) and breadth(B) or width(W) or thicknes(T) of it.

5.4 Third Angle Projection

In this, the object is situated in **Third Quadrant**. The Planes of porjection lie between the object and the observer. The front view comes below the xy line and the top view about it.

BIS Specification (SP46 : 2003)

BIS has recommended the use of First angle projection in line with the specifications of ISO adapted by all countries in the world.

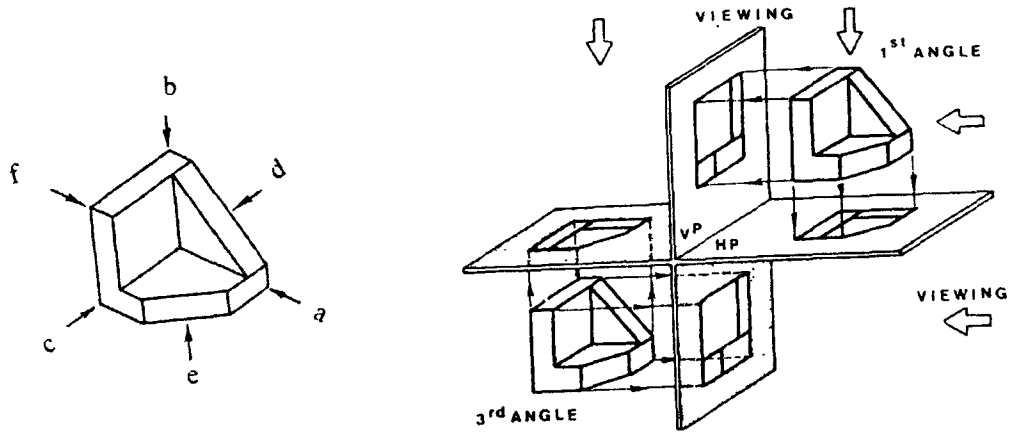

(a) (b)

Fig. 5.6 Principles of orthographic projection.

Designation and Relative Position of Views

An object in space may be imagined as surrounded by six mutually perpendicular planes. So, it is possible to obtain six different views by viewing the object along the six directions, normal to the six planes. Fig.5.6 shows an object with the six possible directions to obtain the six different views which are designated as follows.

1. View in the direction a = front view
2. View in the direction b = top view
3. View in the direction c = left side view
4. View in the direction d = right side view
5. View in the direction e = bottom view
6. View in the direction f = rear view

The relative position of the views in **First angle projection** are shown in Fig.5.7.

Note: A study of the Figure 5.7 reveals that in both the methods of projection, the views are identical in shape and size but their location with respect to the front view only is different.

5.5 Projecton of Points

A solid consists of a number of planes, a plane consists of a number of lines and a line in turn consists of number of points. From this, it is obvious that a solid may be generated by a plane

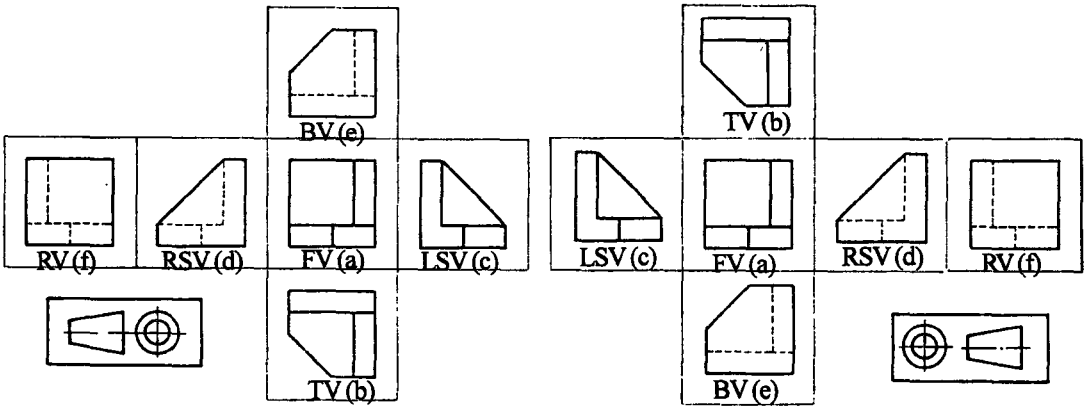

a - First Angle projection

b - Third Angle projection

Fig. 5.7 Relative Positions of Views

ng in space (Fig.5.8a), a plane may be generated by a straight line **AB** moving in space(Fig.5.8b) and a straight line in turn, may be generated by a point **A** moving in space (Fig.5.8c)

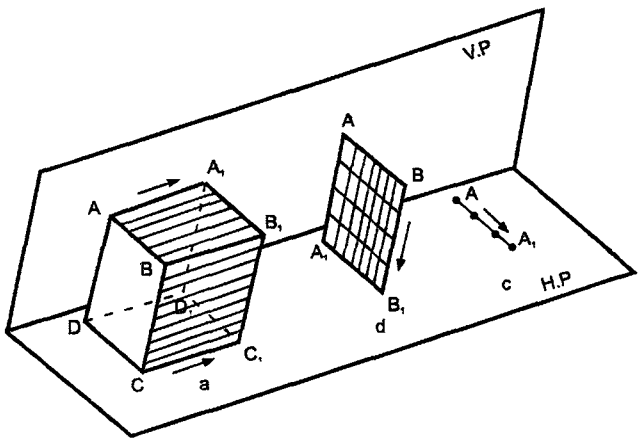

Fig. 5.8

Points in Space

A point may lie in space in any one of the four quadrants. The positions of a point are:

1. First quadrant, when it lies **above H.P** and **in front of V.P.**
2. Second quadrant, when it lies **above HP and behind V.P.**
3. Third quadrant, when it lies **below H.P and behind V.P.**
4. Fourth quadrant, when it lies **below H.P and in front of V.P.**

Knowing the distances of a point from H.P and V.P, projections on H.P and V.P are found by extending the projections perpendicular to both the planes. Projection on H.P is called **Top view** and projection on V.P is called **Front view**

Notation followed

1. Actual points in space are denoted by capital letters A, B, C.
2. Their front views are denoted by their corresponding lower case letters with dashes a^1, b^1, c^1, etc., and their top views by the lower case letters a, b, c etc.
3. Projectors are always drawn as continious thin lines.

Note:

1. Students are advised to make their own paper/card board/perplex model of H.P and V.P as shown in Fig.5.4. The model will facilitate developing a good concept of the relative position of the points lying in any of the four quadrants.
2. Since the projections of points, lines and planes are the basic chapters for the subsequent topics on solids viz, projection of solids, development, pictorial drawings and conversion of pictorial to orthographic and vice versa, the students should follow these basic chapters carefully to draw the projections.

Problem : *Point A is 40 mm above H.P and 60 mm in front of V.P. Draw its front and top view.*

Solution : (Fig.5.9)

1. The point **A** lies in the **I Quadrant**

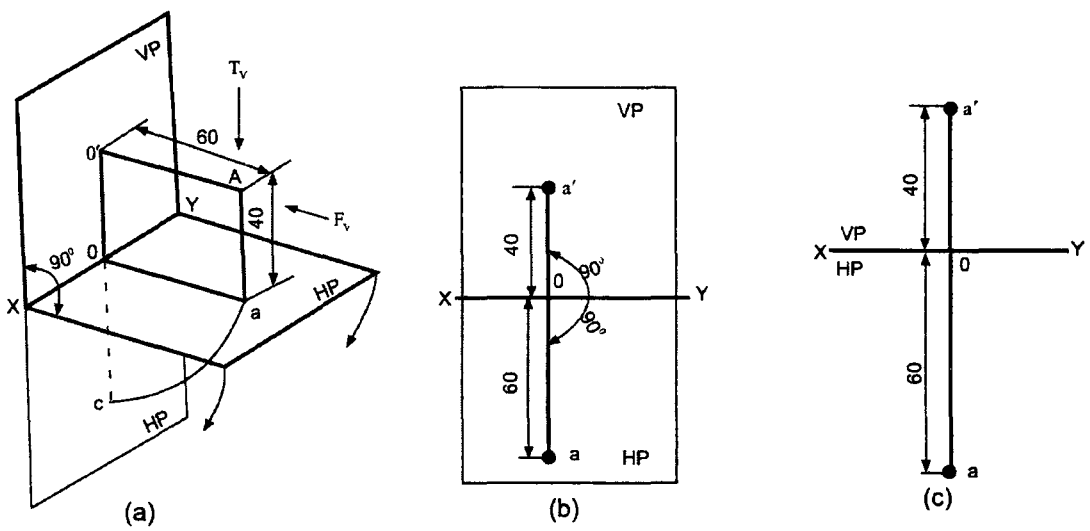

Fig. 5.9 Orthographic projection of a point in First Quadrant

2. Looking from the front, the point lies 40 mm above H.P. A-a^1 is the projector perpendicular to V.P. Hence a^1 is the front view of the point A and it is 40 mm above the xy line.
3. To obtain the top view of **A,** look from the top. Point A is 60mm in front of V.P. Aa is the projector prependicular to H.P Hence, **a** is the top view of the point A and it is 60 mm in front of xy.
4. To convert the projections a^1 and **a** obtained in the pictorial view into orthographic projections the following steps are needed.
   (a) Rotate the H.P about the xy line through 90^0 in the clock wise direction as shown.
   (b) After rotation, the first quadrant is opened out and the H.P occupies the position verically below the V.P line. Also, the point **a** on H.P will trace a quadrant of a circle with **o** as centre and **o-a** as radius. Now **a** occupies the position just below **o**. The line joining a^1 and **a**, called the projector, is perpendicular to xy (Fig.5.9b).
5. To draw the orthographic projections
   (a) Front view : Draw the xy line and draw a projectior at any point on it. Mark a^1 40mm above xy on the projector.
   (b) Top view : on the same projector, mark **a** 60 mm below xy. (Fig.5.9c)

Note:

1. xy line represents H.P in the front view and V.P in the top view. Therefore while drawing the front view on the drawing sheet, the squares or rectangles for individual planes are not necessary.
2. Only the orthographic projections shown in Fig.4.9(c) is drawn as the solution and not the other two figures.

Problem : *Draw the projections of a point A lying on H.P and 25mm in front of V.P.*

Solution : (Fig.5.10)

1. Point A is lying on H.P and so its front view a^1 lies on xy line in Fig.5.10a. Therefore, mark a line xy in the orthographic projeciton and mark on it a^1 (Fig.5.10b).
2. Point A is 25mm in front of V.P and its top view **a** lies on H.P itself and in front of xy.
3. Rotate the H.P through 90^0 in clock wise direction, the top view of the point **a** now comes vertically below a^1.
4. In the orthographic projection **a** is 25 mm below xy on the projector drawn from a^1.

Problem : *Draw the projections of a point A lying on V.P and 70 mm above H.P.*

Solution : (Fig.5.11)

1. Looking at the pictorial view from the front (Fig.5.11a) the point A is 70 mm above H.P and so a^1 is 70 mm above xy. Hence, mark a^1 the orthographic projection 70 mm above xy (Fig.5.11b).

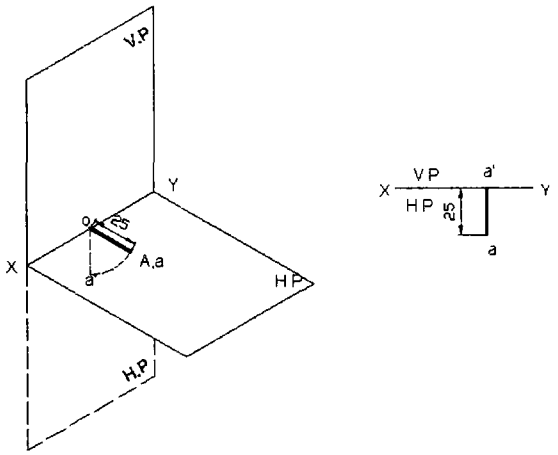

Fig. 5.10

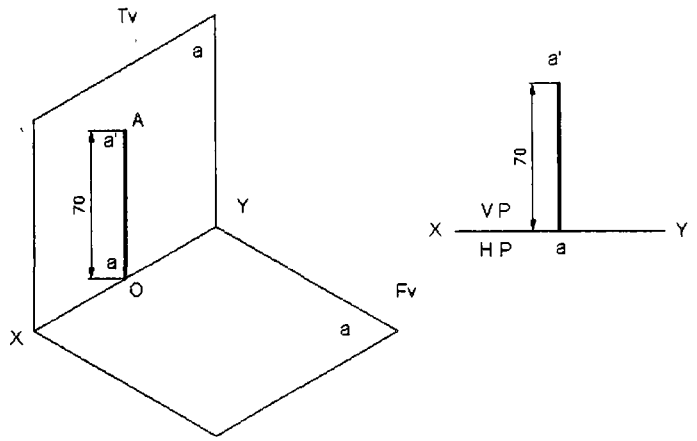

Fig. 5.11

2. Looking at the pictorial view from the top, point **a** is on V.P and its view lies on xy itself. The top view **a** does not lie on the H.P. So in this case the H.P need not be rotated. Therefore mark **a** on xy on the projector drawn from $\mathbf{a}^1$.

Problem : *A Point B is 30 mm above H.P and 40 mm behind V.P Draw its projection.*

Solution **:** (Fig.5.12) The point B lies in the **II Quadrant**

1. It is 30 mm above H.P and $\mathbf{b}^1$ is the front view of B and is 30 mm above xy.
2. Point B is 40 mm behind V.P. and **b** is the top view of B which is 40 mm behind xy.
3. To obtain the orthographic projections from the pictorial view rotate H.P by 90^0 about xy as shown in Fig.5.12a. Now the H.P coincides with V.P and both the front view and top view are now seen above xy. **b** on the H.P will trace a quadrant of a circle with **o** as centre and **ob** as radius. Now **b** occupies the position above **o**.

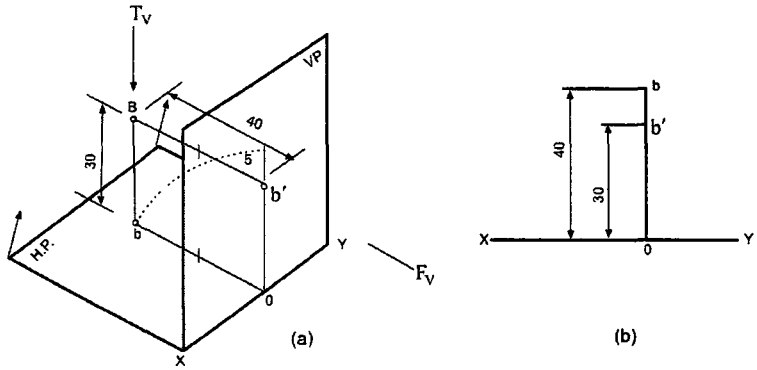

Fig. 5.12 Point in II Quadrant

4. To draw the orthographic projections; draw xy line on which a projectior is drawn at any point. Mark on it **b**[1] 30 mm above xy on this projector.
5. Mark **b** 40 mm above xy on the same projector.

Problem : *A point C is 40 mm below H.P and 30 mm behind V.P. Draw its projections.*

Sulution : (Fig.5.13) The point C is in the **III Quadrant**

1. **C** is 40 mm below H.P Hence **c**[1] is 40 mm below xy.
2. Draw xy and draw projector at any point on it. Mark **c**[1] 40 mm below xy on the projector.

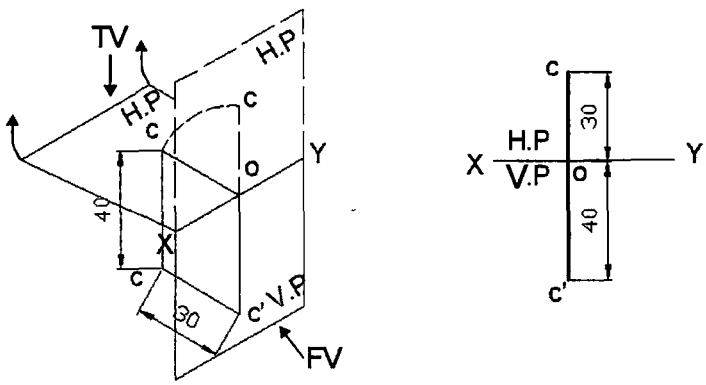

Fig. 5.13 Point in III Quadrant

3. **C** is 30 mm behind V.P. So **c**[1] is 30 mm behind xy. Hence in the orthographic projections mark **c** 30 mm above xy on the above projector.

Problem : *A point D is 30 mm below H.P and 40 mm in front of V.P. Draw its projeciton.*

Solution : (Fig.5.14) The point D is in the **IV Quadrant.**

1. D is 30 mm below H.P. Hence, **d**[1], is 30 mm below xy. Draw xy line and draw a projector perpendicular to it. Mark **d**[1] 30 mm below xy on the projector.
2. D is 40mm in front of V.P; so **d** is 40 mm in front of xy. Therefore, mark **d** 40 mm below xy.

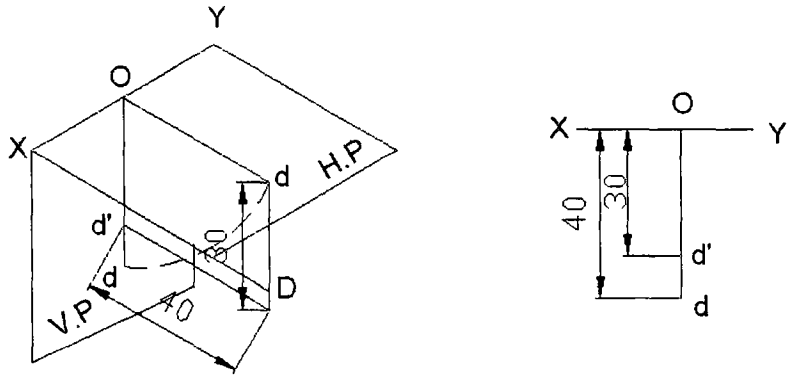

Fig. 5.14 Point in IV Quadrant

Problem : *Draw the orthographic projections of the following points.*

(a.) Point P is 30 mm above H.P and 40 mm in front of VP

(b.) Point Q is 25 mm above H.P and 35 mm behind VP

(c.) Point R is 32 mm below H.P and 45 mm behind VP

(d.) Point S is 35 mm below H.P and 42 mm in front of VP

(e.) Point T is in H.P and 30 mm is behind VP

(f.) Point U is in V.P abd 40 mm below HP

(g.) Point V is in V.P and 35 mm above H.P

(h.) Point W is in H.P and 48 mm in front of VP

Solution : The locaton of the given points is the appropriate quadrants are shown in Fig.5.15a and their orthographic prejections are shown in Fig.5.15b.

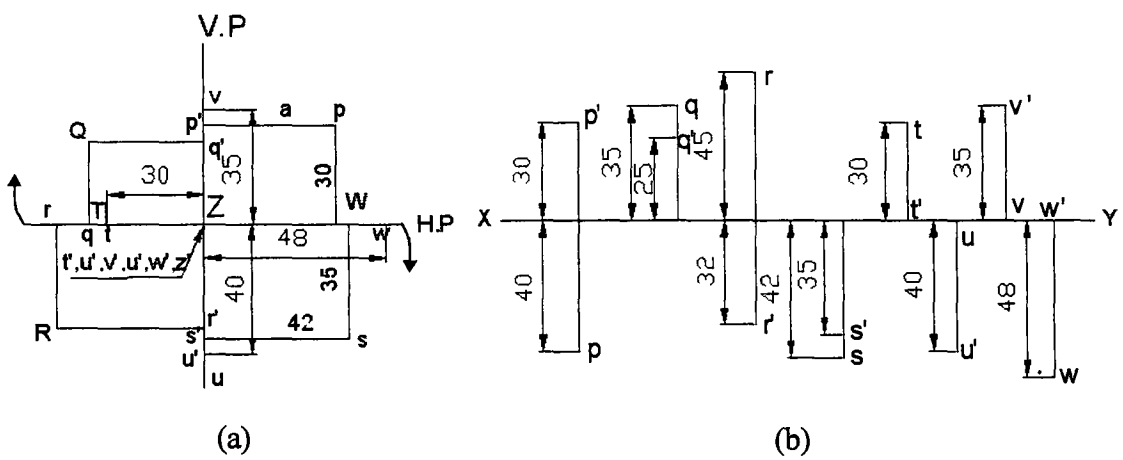

Fig. 5.15 Point in Various Quadrants

5.6 Projection of Lines

The shortest distance between two points is called a straight line. The projectors of a straight line are drawn therefore by joining the projections of its end points. The possible projections of straight lines with respect to V.P and H.P in the first quadrant are as follows:

1. Perpendicular to one plane and parallel to the other.
2. Parallel to both the planes.
3. Parallel to one plane and inclined to the other.
4. Inclined to both the planes.

1. Line perpendicular to H.P and parallel to V.P

The pictorial view of a stright line AB in the **First Quadrant** is shown in Fig.5.16a.

1. Looking from the front; the front view of AB, which is parallel to V.P and marked, **a'b'**, is obtained. True length of AB = **a' b'**.
2. Looking from the top; the top view of AB, which is perpendicular to H.P is obtained **a** and **b** coincide.
3. The Position of the line AB and its projections on H.P. and V.P are shown in Fig.5.16b.
4. The H.P is rotated through 90° in clock wise direction as shown in Fig.5.16b.
5. The projection of the line on V.P which is the front view and the projection on H.P, the top view are shown in Fig.5.16c.

Note : Only Fig.5.16c is drawn on the drawing sheet as a solution.

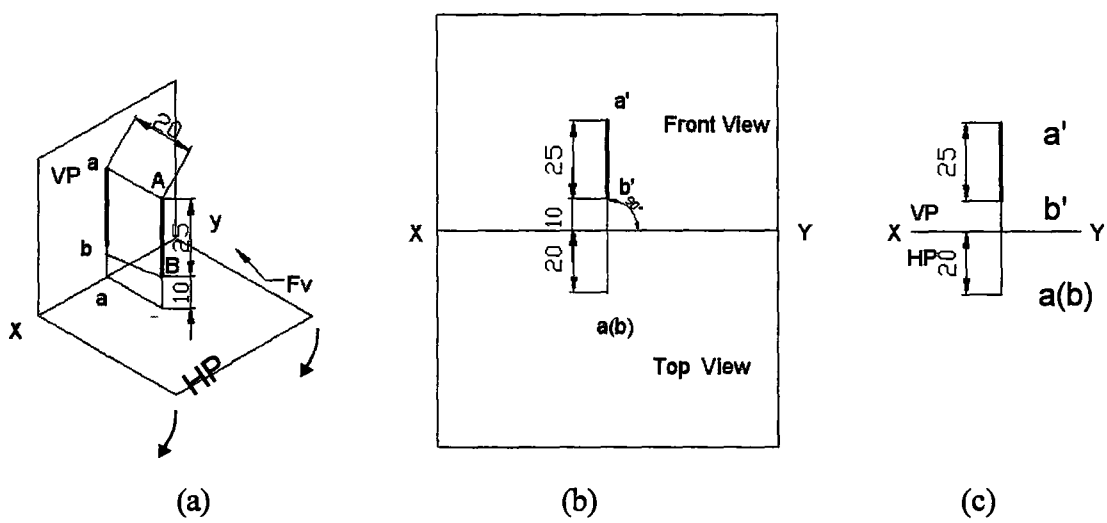

Fig. 5.16 Line perpendicular to H.P and parallel to V.P.

1. Line perpendicular to V.P and parallel to H.P.

Problem : *A line AB 50 mm long is perpendicular to V.P and parallel to H.P. Its end A is 20 mm in front of V.P and the line is 40 mm above H.P. Draw the projectons of the line.*

Solution (Fig. 5.17) : The line is parallel to H.P. Therefore the true length of the line is seen in the top view. So, top view is drawn first.

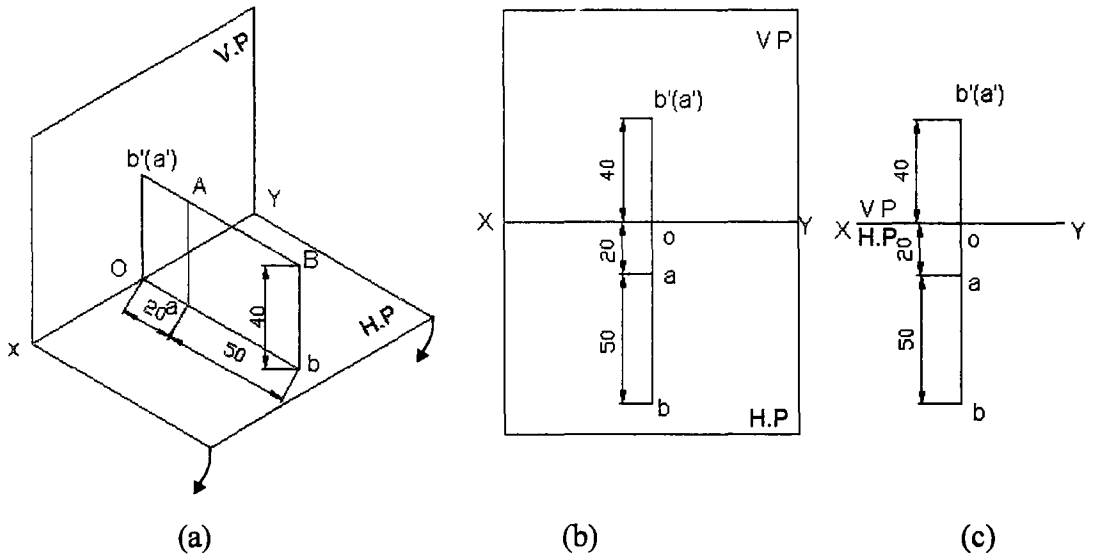

Fig. 5.17 Line perpendicular V.P and parallel to H.P.

1. Draw xy line and draw a projector at any point on it.
2. Point A is 20 mm in front of V.P. Mark **a** which is the top view of A at a distance of 20 mm below xy on the projector.
3. Mark the point **b** on the same projector at a distance of 50 mm below **a. ab** is the top view which is true length of AB.
4. To obtain the front view; mark **b**^{1} at a distance 40mm above xy line on the same projector.
5. The line AB is perpendicular to V.P. So, the front view of the line will be a point. Point A is hidden by B. Hence the front view is marked as **b**^{1} (**a**^{1}). **b**^{1} coincides with **a**^{1}.
6. The final projections are shown in Fig.5.17c.

2. Line parallel to both the planes

Problem : *A line CD 30 mm long is parallel to both the planes. The line is 40 mm above H.P and 20 mm in front of V.P.Draw its projection.*

Solution : (Fig.5.18)

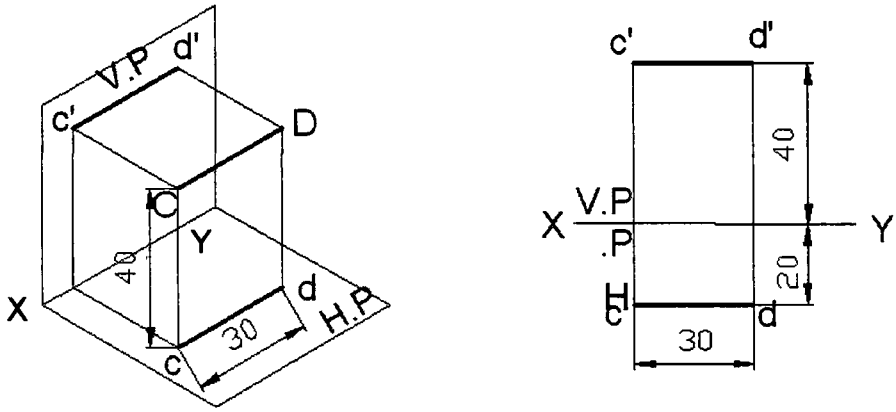

Fig. 5.18 Line Parallel to both the Planes

1. Draw the xy line and draw a projector at any point on it.
2. To obtain the front view mark **c'** at a distance of 40mm abvoe xy (H.P.). The line CD is parallel to both the planes. Front view is true lenght and is parallel to xy. Draw **c' d'** parallel to xy such that **c' d'** = CD = 30 mm, which is the true length.
3. To obtain the top view; the line is also parallel to V.P and 20 mm in front of V.P. Therefore on the projector from **c'**, mark **c** at distance 20 mm below xy line.
4. Top view is also true length and parallel to xy. Hence, **cd** parallel to xy such that **cd**=CD=30mm is the true length.(Fig.5.18).

3. Line parallel to V.P and inclined to H.P.

Problem : *A line AB 40 mm long is parallel to V.P and inclined at an angle of 30⁰ to H.P. The end A is 15 mm above H.P and 20 mm in front of V.P. Draw the projections of the line.*

Solution **:** (Fig.5.19)

1. A is 15 mm above H.P mark **a'**, 15 mm above xy.

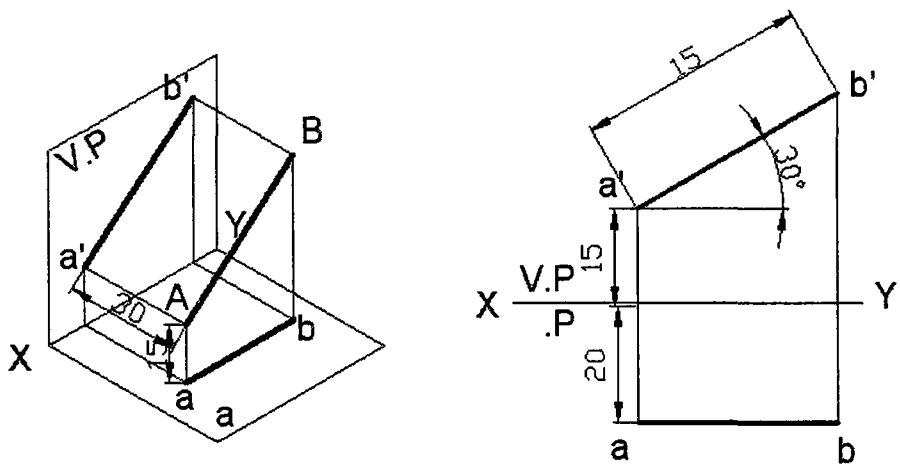

Fig. 5.19 Line parallel to V.P and inclined to H.P.

2. A is 20 mm in front of V.P. Hence mark **a** 20 mm below xy.
3. To obtain the front view **a¹ b¹**; as AB is parallel to V.P and inclined at an angle θ to H.P, **a¹b¹** will be equal to its **true length** and inclined at an angle of 30° to H.P. Therefore draw a line from **a¹** at an angle 30° to xy and mark **b¹** such taht **a¹ b¹** = 40 mm = true length.
4. To obtain the top view ab; since the line is inclined to H.P its projection on H.P (its top veiw) is reduced in length. From **b¹** draw a projector to intersect the horizontal line drawn from **a** at **b**. **ab** is the top view of AB.

Note :

1. Inclination of line with the H.P is always denoted as θ.
2. When a line is parallel to V.P and inclined at an angle of θ to H.P, this inclination is seen in the front view and θ indicates always the true inclination with H.P. Hence, front view is drawn first to get the true length of the line.

Problem : *Draw the projections of straight line AB 60 mm long parallel to H.P and inclined at an angle of 40° to V.P. The end A is 30 mm above H.P. and 20 mm in front of V.P.*

Solution : (Fig.5.20)

1. A is 30 mm above H.P, mark **a¹**, 30 mm above xy.

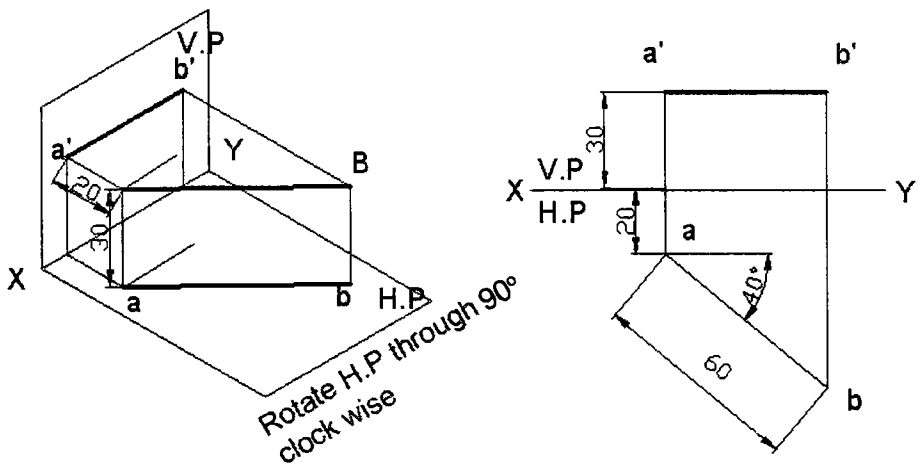

Fig. 5.20 Line Parallel to H.P and Inclined to V.P.

2. A is 20 mm in front of V.P, mark **a** 20 mm below xy.
3. To obtain the top view; as AB is praallel to H.P and inclined at an angle ϕ to V.P, **ab** will be equal to the true length of AB, and inclined at angle ϕ to xy. Therefore, draw a line from **a** at 40° to xy and mark **b** such that **ab**=60 mm true length.
4. To obtain the front view **a¹b¹**, since the line is inclined to V.P its projection on V.P i.e., the front view will be reduced in length. Draw from **b** a projector to intersect the horizontal line drawn from **a** at **b¹**. **a¹b¹** is the front view of AB.

Note :

1. Inclination of a line with V.P is always denoted by ϕ.
2. when a line is paralel to H.P and inclined at an angle of ϕ to V.P, this inclination ϕ is seen in the top view and hence top view is drawn first to get the true length of the line.

4. Line inclined to both the planes

When a line is inclined to both H.P and V.P, it is called an oblique line. The solution to this kind of problem is obtained in three stages, as described below.

Problem : To draw the projections of a line inclined at θ to H.P and ϕ to V.P, given the position of one of its ends.

Construction (Fig.5.21). The position of the line AB is shown in Fig. 5.21a.

Stage 1 Assume the line is inclined to H.P by θ^0 and parallel to V.P. (Fig.5.21b)

1. Draw the projections $a^1b^1_1$ and ab_1 of the line AB_1(=AB), after locating projections and **a** from the given position of the end A.

   Keeping the inclination θ constant rotate the line AB_1 to AB, till it is inclined at ϕ^0 to V.P. This rotation does not change the length of the top view ab_1 and the distance of the point B_1=(B) from H.P. Hence, (i) the length of $\mathbf{ab_1}$ is the final length of the top view and (ii) the line f-f, parallel to xy and passing through $\mathbf{b_1}^1$ is the locus of the front view of the end of point B.

Stage II Assume the line is inclined to VP by ϕ and parallel to H.P(Fig.5.21c)

2. Draw the projections ab_2 and ab of the line AB_2(=AB), after locating the projections $\mathbf{a}^1$ and **a**, from the given position of the end A.

   Extending the discussion on the preceding stage to the present one, the following may be concluded. (i) The length ab is the final length of the front view and (ii) the line t-t, parallel to xy and pasing through b_2 is the locus of the top view of the end point B.

Stage III Combine Stage I and Stage II (Fig.5.21d),

3. Obtain the final projections by combining the results from stage 1 and II as indicated below:

(i) Draw the projections $a^1b^1_1$ and ab_2 making an angle θ and ϕ respectively with xy, after location of the projections a^1 and a, from the given position of the end point A.

(ii) Obtain the projections $a^1b_2^1$ and ab_1, parallel to xy, by rotation.

(iii) Draw the lines f-f and t-t the loci parallel to xy and passing through b_1^1 and b_2 respectively.

(iv) With centre a^1 and radius $a^1b_2^1$, draw an arc meeting f-f at b^1.

(v) With centre a and radius ab_1, draw an arc meeting t-t at b.

(vi) Join a^1,b^1, and a,b forming the required final projections. It is observed from the figure 4.21 c that:

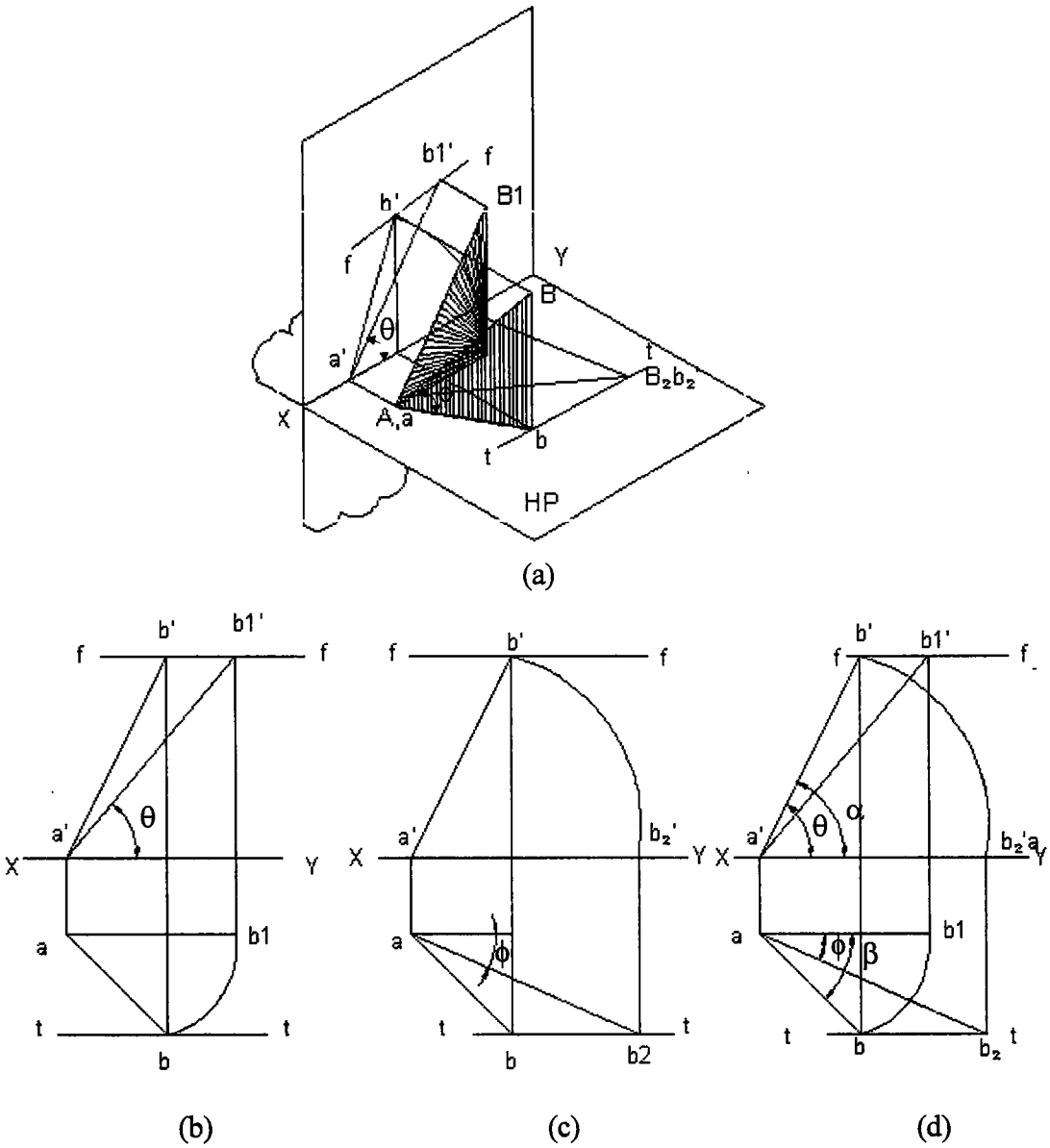

Fig. 5.21 Line Inclined to both the Planes

1. The points b^1 and b lie on a single projection
2. The projections a^1b^1 and ab make angles α and β with xy, which are greater than θ and ϕ. The angles α and β are known as apparent angles.

To determine the true length of a line, given its projections - Rotating line method

In this, each view is made parallel to the reference line and the other view is projected from it. This is exactly reversal of the procedure adopted in the preceding construction.

Construction : (Fig.5.22)

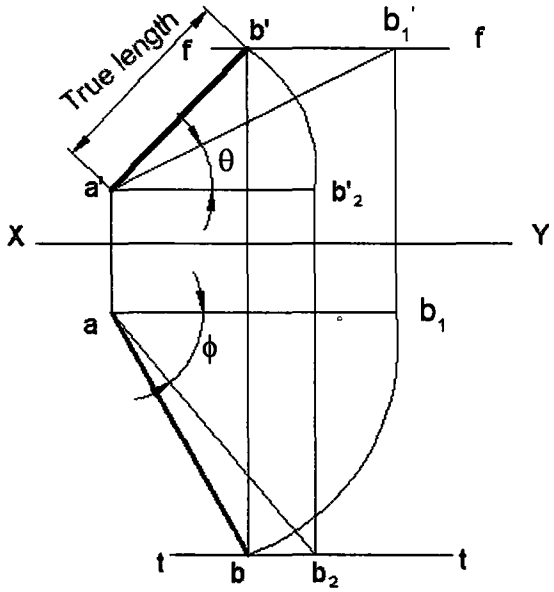

Fig. 5.22 Obtaining true length

1. Draw the given projections a^1b^1 and ab.
2. Draw f-f and t-t, the loci passing through b^1 and b and parallel to xy.
3. Rotate a^1 b^1 to a^1 b_2^1, parallel to xy.
4. Draw a projector through b_2^1 to meet the line t-t at b_2.
5. Rotate ab_1 parallel to xy.
6. Draw a projector through b_1, to meet the line f-f at b_1^1.
7. Join a^1, b_1^1 and a, b_2.
8. Measure and mark the angles θ and ϕ

The length $a^1b_1^1$ (=ab_2) is the true length of the given line and the angles θ and ϕ, the true inclinations of the line with H.P and V.P. respectively.

5.7 Projection of Planes

A plane figure has two dimensions viz. the length and breadth. It may be of any shape such as triangular, square, pentagonal, hexagonal, circular etc. The possible orientations of the planes with respect to the principal planes H.P and V.P of projection are :

1. Plane parallel to one of the principal planes and perpendincular to the other,
2. Plane perpendicular to both the principal planes,
3. Plane inclined to one of the principal planes and perpendclicular to the other,
4. Plane inclined to both the principal planes.

1. Plane parallel to one of the principal planes and perpendicular to the other

When a plane is parallel to V.P the front view shows the true shape of the plane. The top view appears as a line parallel to xy. Figure 5.23a shows the projections of a square plane ABCD, when it is parallel to V.P and perpendicular to H.P. The distances of one of the edges above H.P and from the V.P are denoted by d_1 and d_2 respecively.

Figure 5.23b shows the projections of the plane. Figure 5.23c shows the projections of the plane, when its edges are equally inclined to H.P.

Figure 5.24 shows the projections of a circular plane, parallel to H.P and perpendicular to V.P.

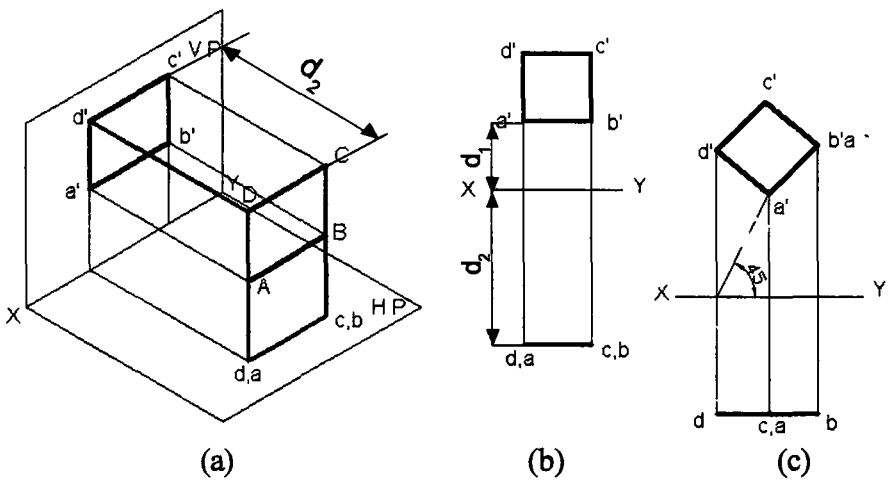

Fig. 5.23

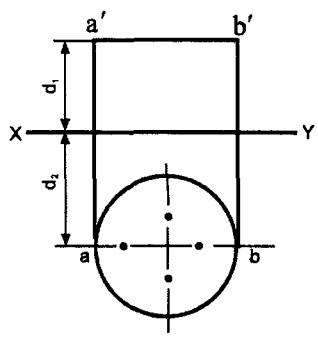

Fig. 5.24

2. Plane perpendicular to both H.P and V.P.

When a plane is perpendicular to both H.P. and V.P, the projections of the plane appear as straight lines. Figure 5.25 shows the projections of a rectangular plane ABCD, when one of its longer edges is parallel to H.P. Here, the lengths of the front and top views are equal to the true lengths of the edges.

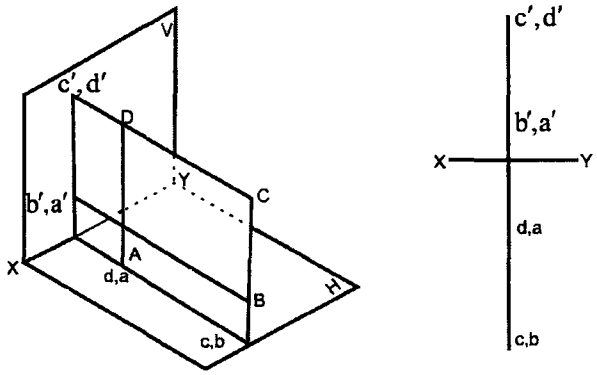

Fig. 5.25

3. Plane inclined to one of the principal planes and perpendicular to the other

When a plane is inclined to one plane and perpendicular to the other, the projections are obtained in two stages.

Problem :

(i) Projections of a pentagonal plane ABCDE, inclined at ϕ to H.P and perpendicular to V.P and resting on one of its edges on H.P.

Constructon : (Fig.5.26)

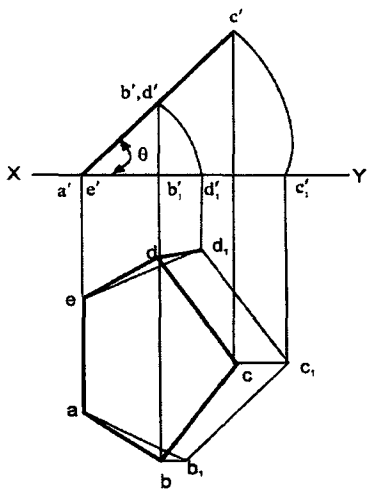

Fig. 5.26

Stage 1 Asume the plane is parallel to H.P (lying on H.P) and perpendicular to V.P.

1. Draw the projections of the pentagon ABCDE, assuming the edge AE perpendicular to V.P. a^1e^1 $b^1_1d^1_1$ c^1_1 on xy is the front view and ab_1 c_1d_1e is the top view.

Stage II Rotate the plane (front view) till it makes the given angle with H.P.

2. Rotate the front view till it makes the given angle θ with xy which is the final front view.
3. obtain the final top view abcde by projection.

Problem : *Following the method similar to the above, the projections are obtained in Fig.5.27 for hexagonal plane, inclined at ϕ to V.P and perpendicular to H.P, with the edge parallel to H.P.*

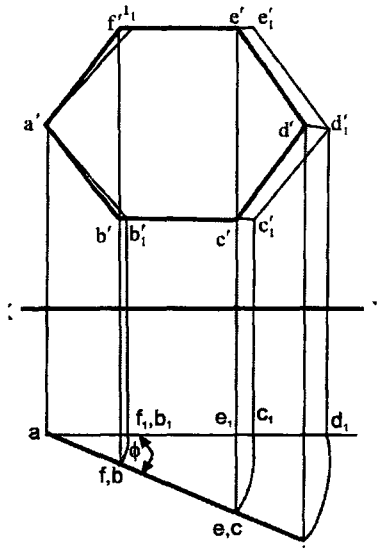

Fig. 5.27

Plane inclined to both H.P and V.P

If a plane is inclined to both H.P and V.P, it is said to be an oblique plane. Projections of oblique planes are obtained in three stages.

Problem : *A rectangular plane ABCD inclined to H.P by an angle θ, its shorter edge being parallel to H.P and inclined to V.P by an angle ϕ. Draw its projections.*

Construction (Fig.5.28)

Stage 1: Assume the plane is parallel to H.P and a shorter edge of it is perpendicular to V.P.

1. Draw the projections of the plane.

Stage II : Rotate the plane till it makes the given angle with H.P.

2. Redraw the front view, making given angle θ with xy and then project the top view.

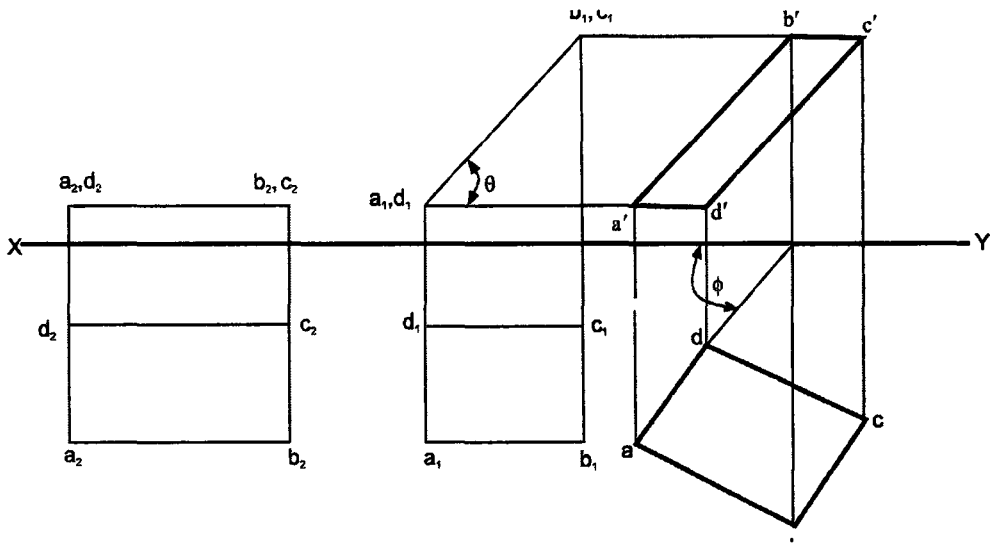

Fig. 5.28 Plane inclined to both the planes

Stage III : Rotate the plane till its shorter edge makes the given angle ϕ with V.P.

3. Redraw the top view abcd such that the shorter edge **ad**, is inclined to xy by ϕ.
4. Obtain the final front view $a^1b^1c^1d^1$, by projection.

Examples

Problem : *A line AB of 50 mm long is parallel to both H.P and V.P. The line is 40 mm above H.P and 30 mm in front of V.P. Draw the projections of the line.*

Solution : (Fig.5.29)

Fig.5.29a shows the position of the line AB in the first quadrant. The points a^1, b^1 on V.P and a, b on H.P are the front and top views of the ends A and B of the line AB. The lines a^1b^1 and ab are the front and top views of the line AB respectively.

Fig. 5.29 b shows the relative positions of the views along with the planes, after rotating H.P, till it is in-line with V.P. Fig. 5.29c shows the relative positions of the view only.

Problem : *A line AB of 25 mm long is perpendicular to H.P and parallel to V.P. The end points A and B of the line are 35 mm and 10 mm above H.P respectively. The line is 20 mm in front of V.P. Draw the projections of the line.*

Solution : **(Fig.5.30)**

Fig. 5.30a shows the position of the line AB in the first quadrant. As the line is parallel to V.P, the length of the front view is equal to the true length of the line and the top view appears as a point.Figure 4.2b shows the projection.

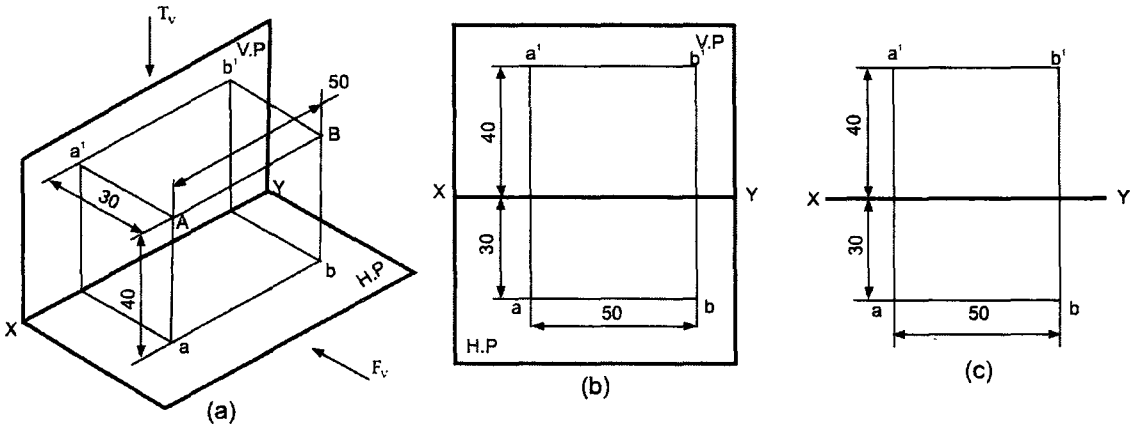

Fig. 5.29

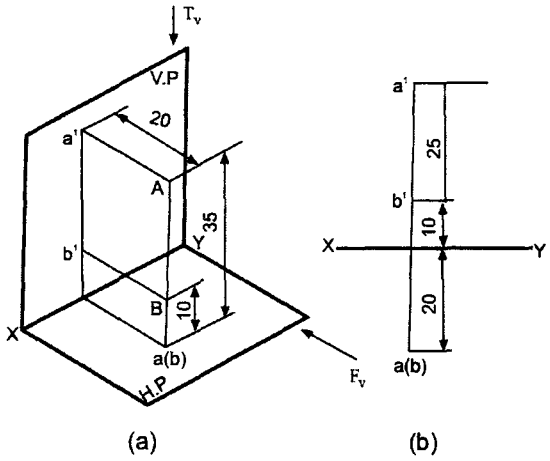

Fig. 5.30

Problem : *A line AB of 25 mm long is perpendicular to V.P and parallel to H.P. The end points A and B of the line are 10 mm and 35 mm in front of V.P respectively. The line is 20 mm above H.P. Draw its projections.*

***Solution* : (Fig.5.31)**

Fig.5.31a shows the position of the line AB in the first quadrant. As the line is parallel to H.P., the length of the top view is equal to the true length of the line and the front view appears as a point. Figure 5.31b shows the projection of the line.

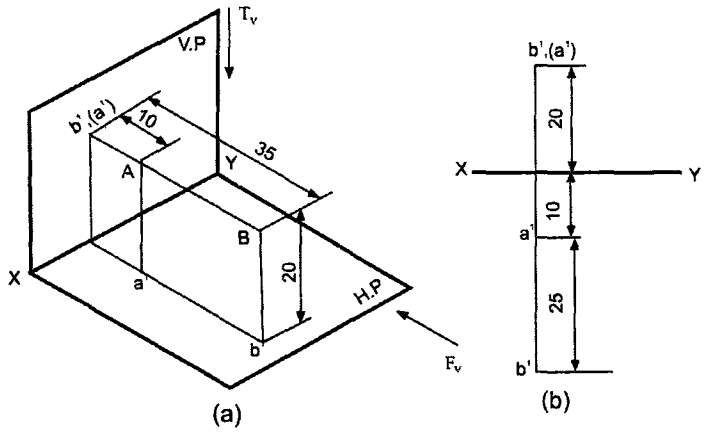

Fig. 5.31

Problem : A line AB 50 mm long is parallel to V.P. and inclined at an angle of 30° to H.P. The end A is 15 mm above H.P. and 20 mm in front of V.P. Draw the projections of the line.

Solution : (Fig.5.32)

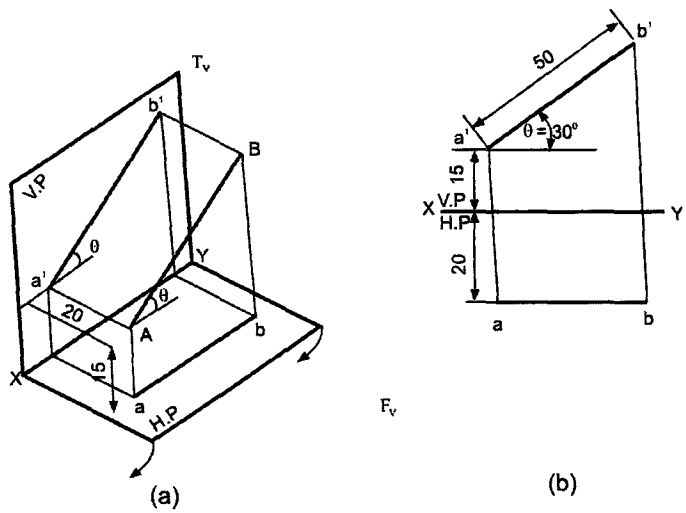

Fig. 5.32

1. A is 15 mm above H.P. Hence mark **a'** 15 mm above xy.
2. A is 20 mm in front of V.P. Hence mark **a** 20 mm below xy.

To obtain the front view a'b', look from the front (Fv):

3. As AB is parallel to V.P. and inclined at an angle of 30° to H.P., **a'b'** will be equal to its true length and inclined at an angle of 30° to xy.

Note : When a line is parallel to V.P. and inclined at an angle of θ to H.P., this inclination θ will be seen in the front view. θ **denotes always the true inclination with H.P.**

3. Therefore from a^1 draw a line at an angle of 30^0 to xy and mark b^1 such that a^1b^1 50mm = true length.

To obtain the top view ab look from the top T_V:

Since the line is inclined to H.P., its projection on H.P. i.e., the top view will be in reduced length.

4. From b^1 draw a projector to intersect the horizontal line drawn from **a** at **b**, **ab** is the top view of AB.

Problem : A line EF 60 mm long is parallel to VP and inclined 30^0 to HP. The end E is 10 mm above HP and 20 mm in front of VP. Draw the projections of the line.

Solution : (Fig.5.33).

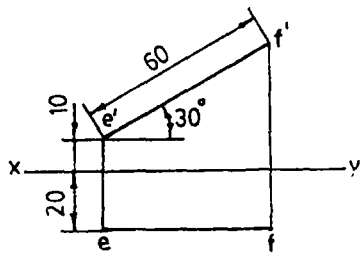

Fig. 5.33

Problem : The length of the fromt view of a line CD which is parallel to HP and inclined 30^0 to VP, is 50 mm. The end C of the line is 15 mm in front of VP and 25 mm above HP. Draw the projections of the line and find its ture length.

Solution : (Fig.5.34).

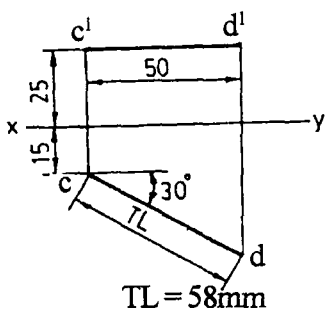

Fig. 5.34

Problem : A line CD 40 mm long is in V.P. and inclined to H.P. The top view measures 30 mm. The end C is 10 mm above H.P. Draw the projections of the line. Determine its inclination with H.P.

Solution : (Fig. 5.35).

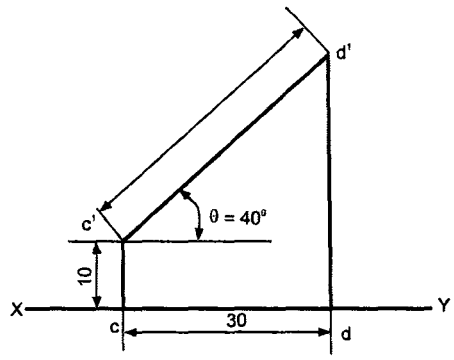

Fig. 5.35

Problem : A line AB 45 mm long is in H.P. and inclined to V.P. The end A is 15 mm in front of V.P. The length of the front view is 35 mm. Draw the projections of the line. Determine its inclination with V.P.

Solution : (Fig. 5.36).

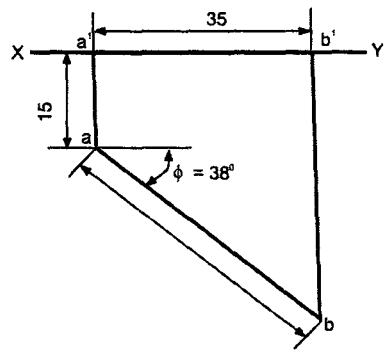

Fig. 5.36

Problem : A line AB, 50mm long, has its end A in both the H.P. and the V.P. It is inclined at 30° to the H.P. and at 45° to the V.P. Draw its projections.

Solution : (Fig. 5.37).

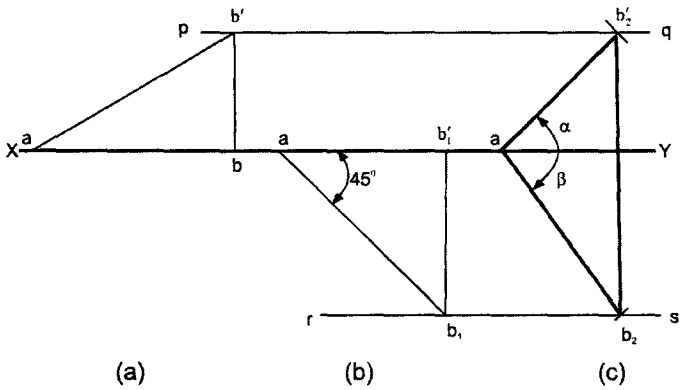

Fig. 5.37

Problem : A top view of a 75 mm long line AB measures 65 mm, while the length of its front view is 50 mm. Its one end A is in the H.P. and 12 mm in front of the V.P. Draw the projections of AB and determine its inclinatiion with H.P. and the V.P.

Solution : (Fig.5.38)

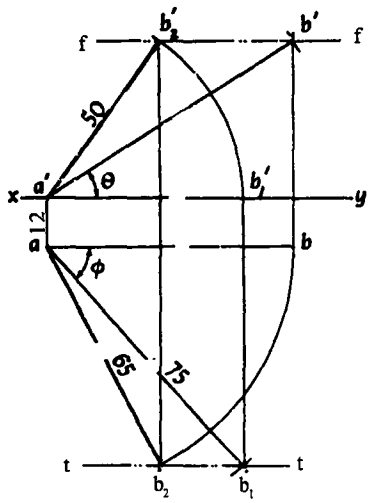

Fig. 5.38

1. Mark the front view **a**[1] and the top view **a** of the given end A.
2. Assuming AB to be parallel to the V.P draw a line **ab** equal to 65 mm and parallel to xy. With **a**[1] as centre and radius equal to 75 mm, draw an arc cutting the projector through **b** at **b**[1]. The line **f f** through **b**[1] and parallel to xy, is the locus of B in the view and θ is the inclination of AB with the H.P.

3. Similarly, draw a line $a^1b^1_1$ in xy equal to 50 mm and with **a** as centre and radius equal to AB draw an arc cuting the projector through b^1_1 at b_1. The locus of B is t **t** in the top view and ϕ is the inclination of AB with the V.P.
4. With a^1 as centre and radius equal to $a^1b^1_1$, draw an arc cutting **ff** at b^1_2. With **a** as centre and radius equal to **ab,** draw an arc cutting **tt** at b_2, a^1 b_2^1 and ab_2 are the required projections.

Problem : A line AB, 90 mm long, is inclined at 30° to the H.P. Its end A is 12 mm above the H.P. and 20 mm in front of the V.P. Its front view measures 65 mm. Draw the top view of AB and determine its inclination with the V.P.

Solution **:** (Fig.5.39)

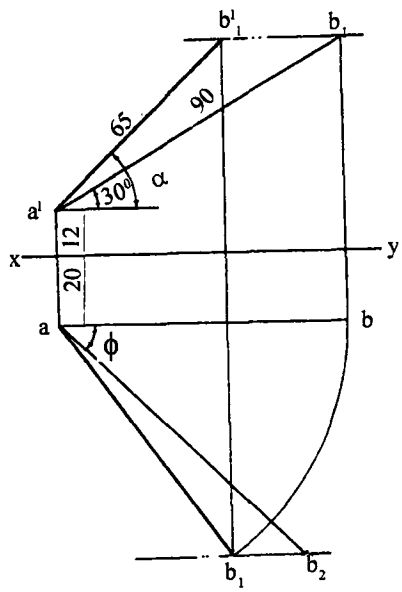

Fig. 5.39

1. Mark **a** and a^1 the projections of the end A. Through a^1_1 draw a line a^1b^1 90 mm long and making an angle of 30° with xy.
2. With a^1 as centre and radius equal to 65 mm, draw an arc cutting the path of b^1 at b^1_1. $a^1b^1_1$ is the front view of AB.
3. Project b^1 to b_1 so that ab is parallel to xy. ab is the length of AB in the top view.
4. With a as centre and radius equal to ab_1 draw an arc cutting the projector through b^1_1 at b_1. Join **a** with b_1. ab_1 is the required top view.

Problem : *A line AB of 70 mm long, has its end A at 10 mm above H.P and 15 mm in front of V.P. Its front view and top view measure 50 mm and 60 mm respectively. Draw the projections of the line and dermine its inclinations with H.P. and V.P.*

Solution **:** (Fig. 5.40)

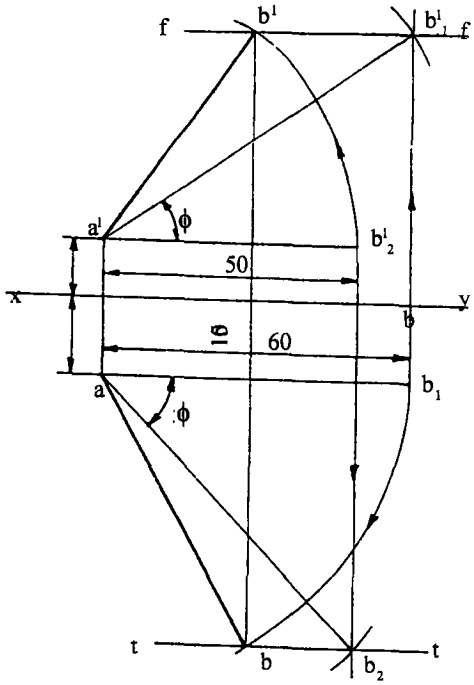

Fig. 5.40

1. Draw the reference line xy and locate the projections **a, a¹** of the end A.
2. Draw **a¹b₂¹=50 mm**, parallel to xy, representing the length of the front view.
3. With centre **a** and radius 70 mm (true length), draw an arc intersecting the projector through **b¹₂ at b₂**.
4. Join **a, b₂**.
5. Draw ab_1 (=60 mm), parallel to xy, representing the length of the top view.
6. With centre **a¹** and radius 70 mm (true length), draw an arc intersecting the projector through **b₁** at **b₁¹**.
7. Through **b₁¹**, draw the line f-f, representing the locus of front view of B.
8. Through **b₂**, draw the line t-t, representing the locus of top view of B.
9. With centre **a** and radius **a b₂¹** , draw an arc intersecting f-f at **b¹**.
10. Join **a¹, b¹**, representing the front view of the line.
11. With centre **a** and radius **ab₁**, draw an arc intersecting t-t at **b**.
12. Join **a,b** repesenting the top view of the line.

5.8 TRACES

Traces of a line

When a line is inclined to a plane, it will meet that plane when produced if necessary. The point at which the line or line produced meets the plane is called its trace.

The point of intersection of the line or line produced with H.P. is called Horizontal Trace (H.T) and that with V.P. is called Vertical Trace (V.T).

To find H.T. and V.T. of a line for its various positions with respect to H.P. and V.P.

1. Line parallel to H.P. and perpendicular to V.P.

Problem : *A line AB 25 mm long is parallel to H.P. and perpendicular to V.P. The end is 10 mm in front of V.P. and the line is 20mm above H.P. Draw the projections of the line and find its traces.*

Solution : (Fig.5.41)

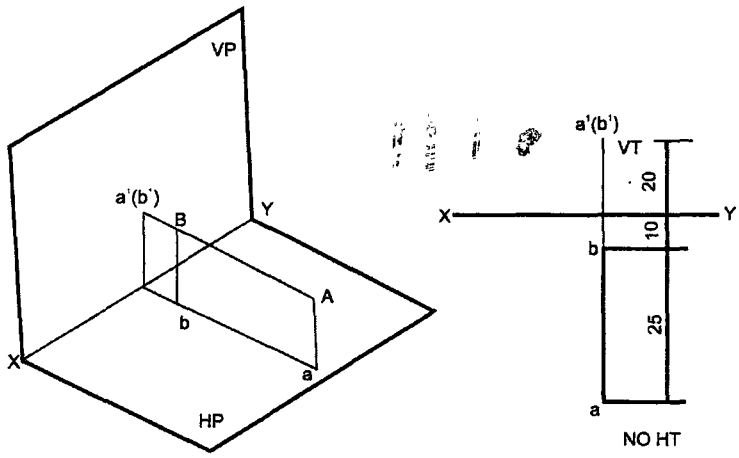

Fig. 5.41

1. Draw the front view **a¹ (b¹)** and top view **ab.**
2. AB is perpendicular to V.P.

Therefore mark V.T. in the front view to coincide with **a¹(b¹).**

3. AB is parallel to H.P. Therefore it has no H.T.

2. Line parallel to V.P. and perpendicular to H.P.

Problem : A *line CD 25 mm long is parallel to V.P. and perpendicular to H.P. End C is 35 mm above H.P. and 20 mm in front of V.P. End D is 10 mm above H.P. Draw the projections of the line CD and find its traces.*

Solution : (Fig. 5.42)

1. Draw the front view **a¹b¹** and top view **ab.**
2. Produce **b¹a¹** to meet XY at **h¹.** From **h¹** draw a projector to intersect **ba** produced at H.T.
3. CD is parallel to V.P. Therefore it has no V.T.

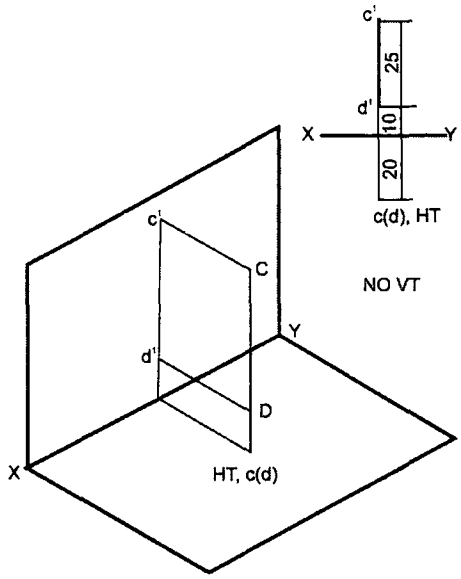

Fig. 5.42

3. Line parallel to V.P and inclined to H.P.

Problem : A line AB 40 mm long is parallel to V.P. and inclined at 30o to H.P. The end A is 15 mm above H.P. and 20 mm in front of V.P. Draw the projections of the line and find its traces.

Solution : (Fig. 5.43)

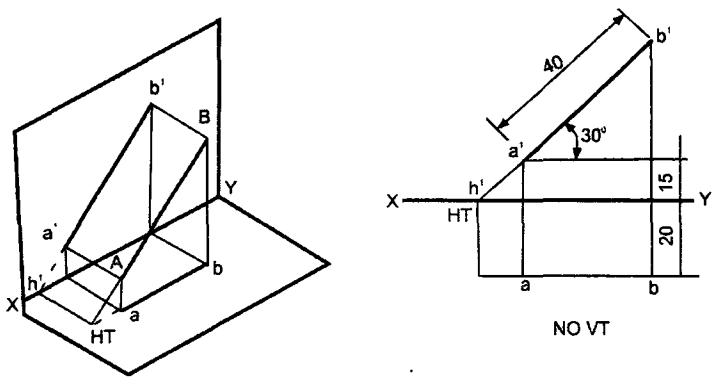

Fig. 5.43

1. Draw the front view a1b1 and top view ab.
2. Produce $\mathbf{b^1a^1}$ to meet XY at $\mathbf{h^1}$. From $\mathbf{h^1}$ draw a projector to intersect **ba** produced at H.T.
3. AB is parallel to V.P. Therefore it has no V.T.

4. Line parallel to H.P. and inclined to V.P.

Problem : Draw the projections of a straight line CD 40 mm long, parallel to H.P. and inclined at 35^0 to V.P. The end C is 20 mm above H.P. and 15 mm in front of V.P. Find its traces.

Solution : (Fig. 5.44)

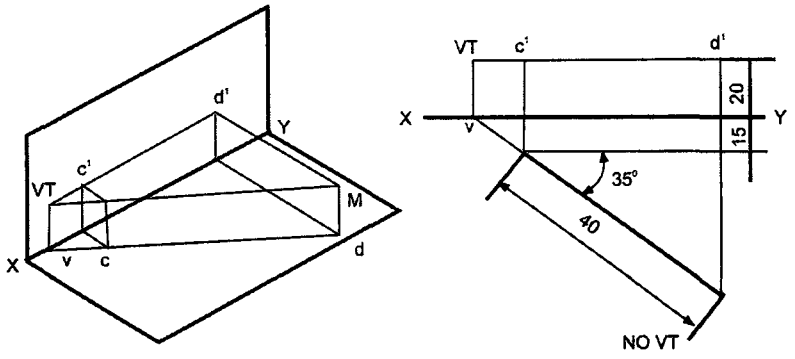

Fig. 5.44

1. Draw the front view **c'd'** and top view **cd**.
2. Produce **dc** to meet XY at v. From v draw a projector to intersect d'c' produced at V.T.
3. CD is parallel to H.P.
4. Therefore it has no H.T.

5. Line parallel to both H.P. and V.P.

Problem : *A line AB 40 mm long is parallel to both the planes. The line is 20 mm above H.P. and 15 mm in front of V.P. Draw the projections and find its traces.*

Solution : (Fig. 5.45)

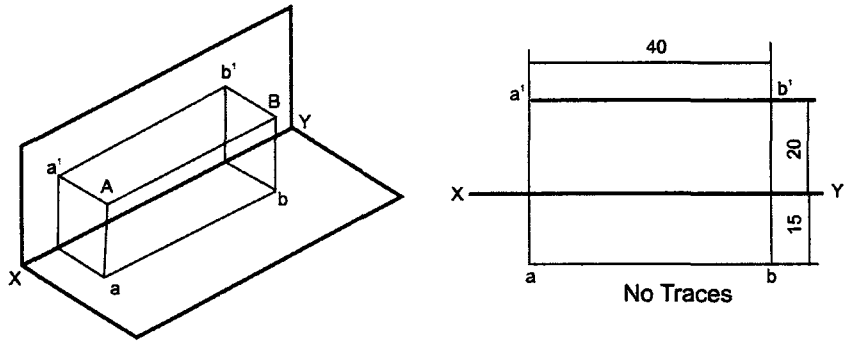

Fig. 5.45

1. Draw the front view **a'b'** and top view **ab.**
2. The line AB is parallel to both the planes when the line is extended, it will not meet both H.P. and V.P., since it is parallel to both the planes. Therefore it has no H.T. and V.T.

Problem : A pentagonal plane ABCDE of 35 mm side has its plane inclined 50° to H.P. Its diameter joining the vertex B to the mid point F of the base DE is inclined at 25° to the xy-line. Draw its projections keeping the corner B nearer to VP.

Solution : (Fig.5.46)

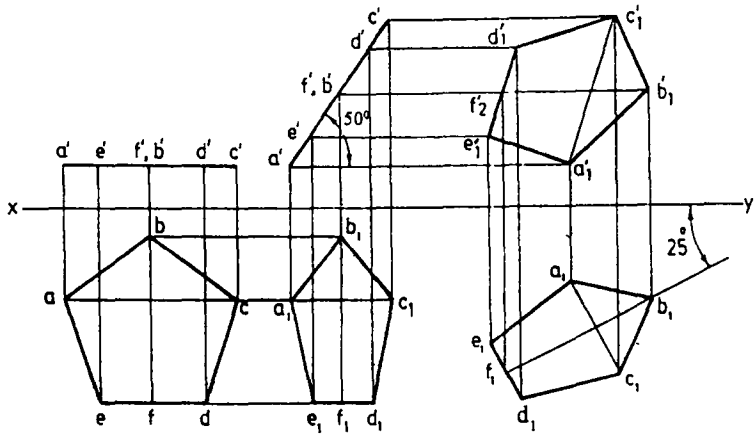

Fig. 5.46

Problem : A regular pentagon ABCDE, of side 25 mm side has its side BC on ground. Its plane is perpendicular to H.P and inclined at 45° to the V.P. Draw the projections of the pentagon and show its traces when its corner nearest to V.P is 15 mm from it.

Solution : (Fig.5.47)

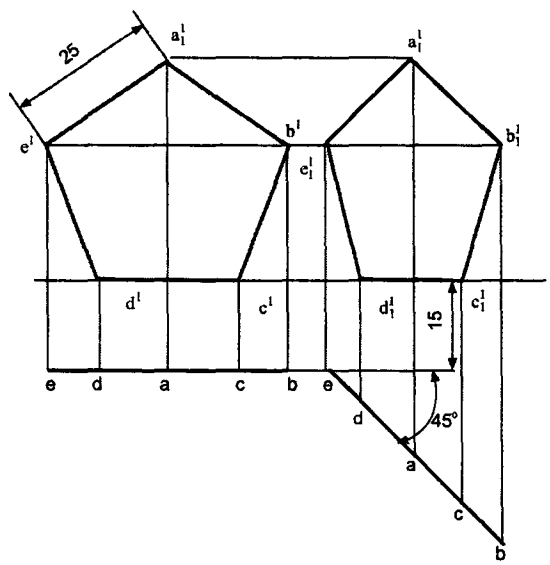

Fig. 5.47

Exercises

1. Draw the projections of a point A which is at 40 mm above HP and 25 mm in front of VP.
2. A point A is at 55 mm above HP and 40 mm behind VP. Draw its projection.
3. A point A is lying at 30 mm behind VP and 60 mm below HP. Draw its projections.
4. Draw the projections of a point A which lies at 40 mm below the HP and 70 mm in front of VP.
5. Draw the projections of a straight line 70 mm long when it is parallel to both HP and VP. It is 15 mm in front of VP and 40 mm above HP.
6. A straight line of length 70 mm is parallel to VP and perpendicular to HP. It's one end is 20 mm below the HP and 50 mm behind VP. Draw its orthographic projections.
7. A line of length 70 mm is parallel and 20 mm in front of VP. It is also inclined at 45^0 to HP and one end is on it. Draw its projections.
8. A line 75 mm long is inclined at 50^0 to VP and one of the ends is on it. It is parallel to HP and 40 mm below it. The line is behind VP. Draw its projections.
9. A straight line AB 70mm long has one of its ends 25 mm behind VP and 20 mm below HP. The line is inclined at 30^0 to HP and 50^0 to VP. Draw its projections.
10. A pentagonal plane of side 40 mm is perpendicular to HP and makes an angle of 45^0 with VP. Draw its projections.
11. A regular hexagon of side 20 mm has one of its sides inclined at 30^0 to VP. Its surface makes an angle of 60^0 with the ground. Draw its projections.
12. A line MN 50 mm long is parallel to VP and inclined at 30^0 to HP. The end M is 20 mm above HP and 10 mm in front of VP. Draw the projections of projections of the line.
13. A line PQ 40 mm long is parallel to VP and inclined at an angle of 30^0 to HP. The end P is 15 mm above HP and 20 mm in front of VP. Draw the projections of the line.

CHAPTER 6

Projection of Solids

6.1 Introduction

A solid has three dimensions, the length, breadth and thickness or height. A solid may be represented by orthographic views, the nuber of which depends on the type of solid and its orientation with respect to the planes of projection. solids are classified into two major groups. (i) Polyhedra, and (ii) Solids of revolution

6.1.1 Polyhedra

A polyhedra is defined as a solid bounded by plane surfaces called faces. They are :

(i) Regular polyhedra (ii) Prisms and (iii) Pyramids.

6.1.2 Regular Polyhedra

A polyhedron is said to be regular if its surfaces are regular polygons. The following are some of the regular plolyhedra.

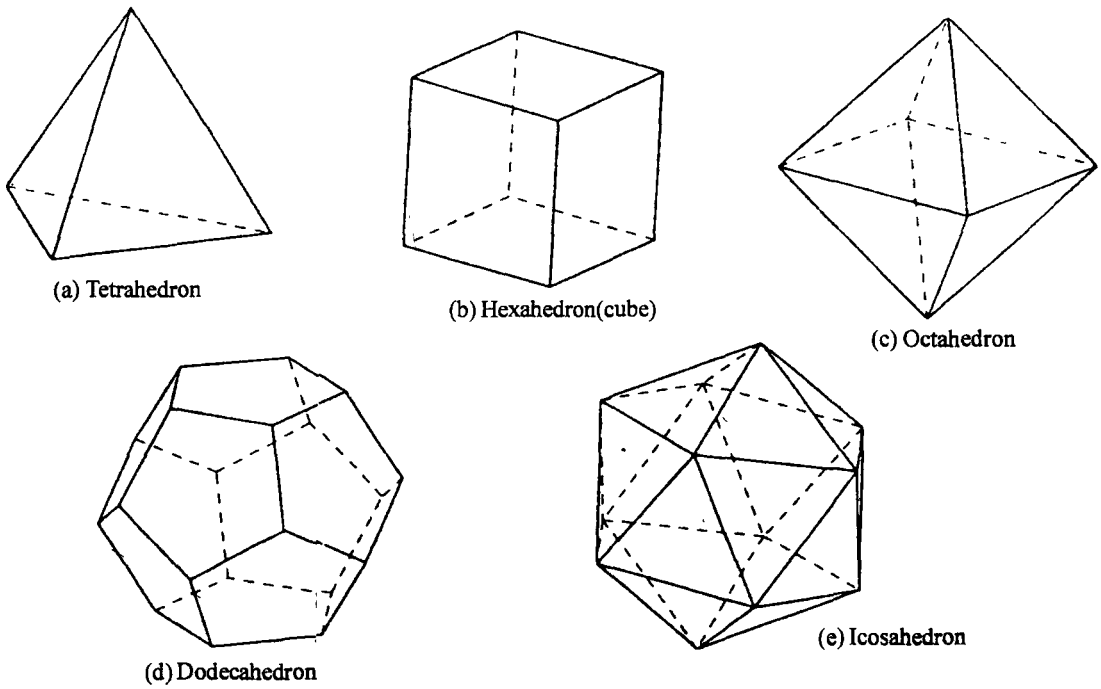

Fig. 6.1

(a) Tetrahedron: It consists of four equal faces, each one being a equilateral triangle.
(b) 'Hexa hedron(cube): It consists of six equal faces, each a square.
(c) Octahedron : It thas eight equal faces, each an equilateral triangle.
(d) Dodecahedron : It has twelve regular and equal pentagonal faces.
(e) Icosahedron : It has twenty equal, equilateral triangular faces.

6.2 Prisms

A prism is a polyhedron having two equal ends called the bases prallel to each other. The two bases are joined by faces, which are rectangular in shape. The imaginary line passing through the centres of the bases is called the axis of the prism.

A prism is named after the shape of its base. For example, a prism with square base is called a square prism, the one with a pentagonal base is called a pentagonal prism, and so on (Fig.6.2) The nomenclature of the prism is given in Fig.6.3.

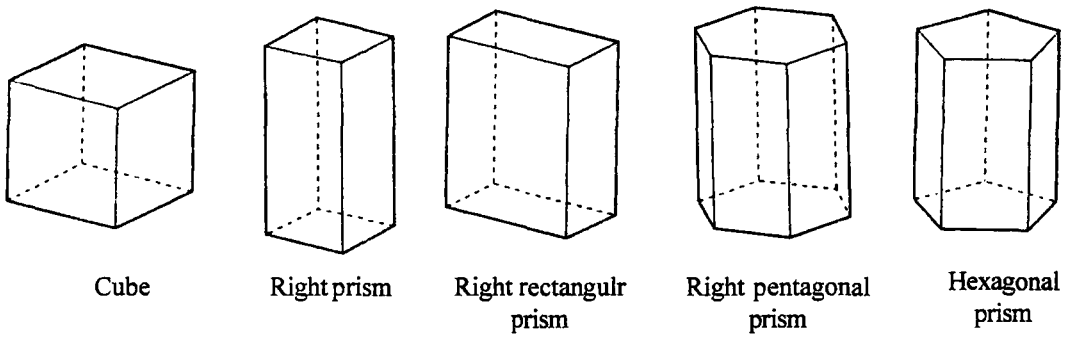

Fig. 6.2

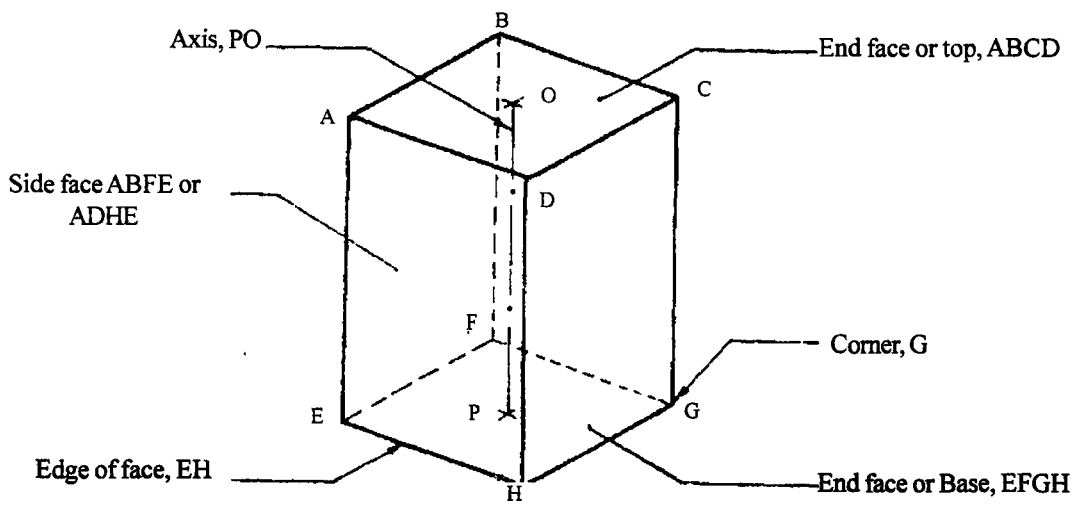

Fig. 6.3 Nomenclature of a Square Prism

6.3 Pyramids

A pyramid is a polyhedron having one base, with a number of isosceles triangular faces, meeting at a point called the apex. The imaginary line passing through the centre of the base and the apex is called the axis of the pyramid.

The pyromid is named after the shape of the base. Thus, a square pyramid has a square base and pentagonal pyramid has pentagonal base and so on (Fig.6.4(a)). The nomenclature of a pyramind is shown in Fig.6.4(b).

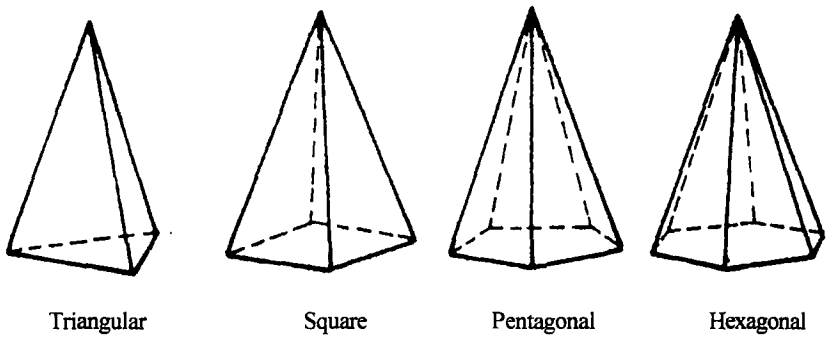

Fig. 6.4(a) Pyramids

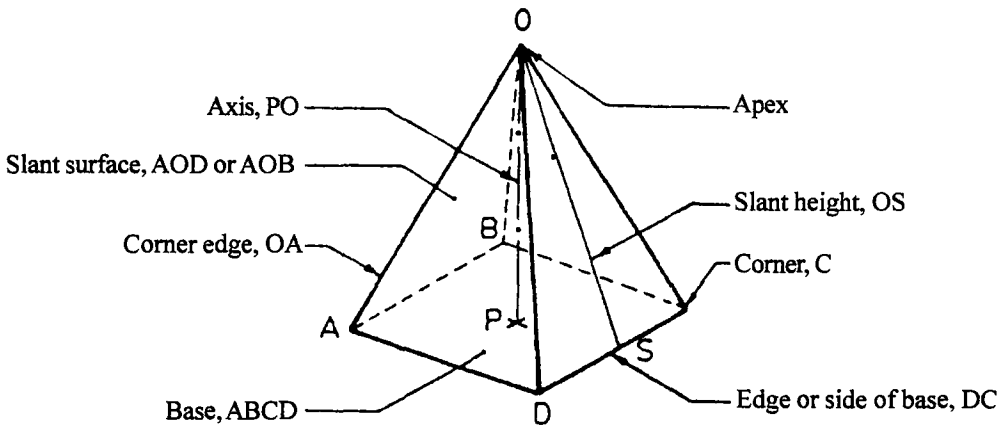

Fig. 6.4(b) Nomenclature of a Square Pyramid

6.4 Solids of Revolution

If a plane surface is revolved about one of its edges, the solid generated is called a solid of revolution. The examples are (i) Cylinder, (ii) Cone, (iii) Sphere.

6.5 Frustums and Truncated Solids

If a cone or pyramid is cut by a section plane parallel to its base and the portion containing the apex or vertex is removed, the remaining portion is called **frustum** of a cone or pyramid

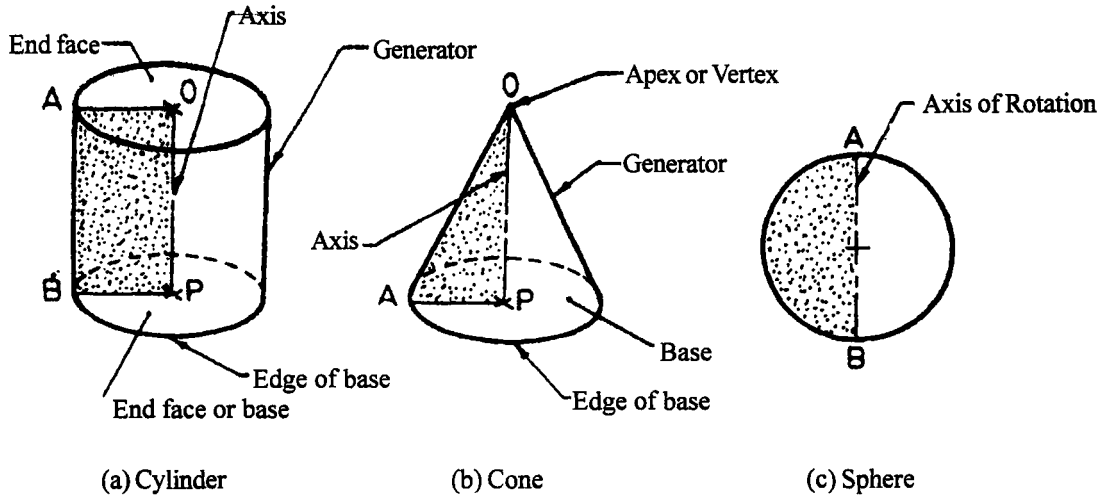

Fig. 6.5 Solids of Revolution

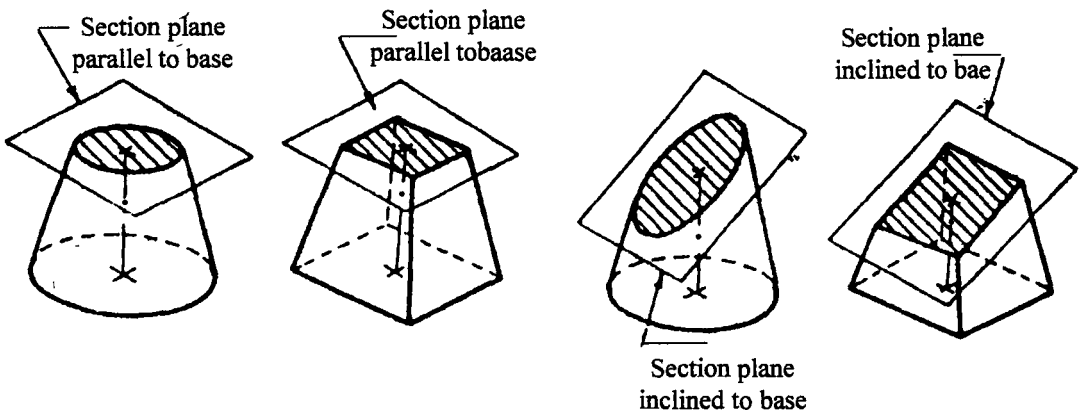

Fig. 6.6 Frustum of a Solid and Truncated Solids

6.6 Prisms (Problem) Position of a Solid with Respect to the Reference Planes

The position of solid in space may be specified by the location of either the axis, base, edge, diagonal or face with the principal planes of projection. The following are the positions of a solid considered.

1. Axis perpendicular to one of the principal planes.
2. Axis parallel to both the principal planes.
3. Axis inclined to one of the principal planes and parallel to the other.
4. Axis inclined to both the principal planes.

The position of solid with reference to the principal planes may also be grouped as follows:

1. Solid resting on its base.

2. Solid resting on any one of its faces, edges of faces, edges of base, generators, slant edges, etc.
3. Solid suspended freely from one of its corners, etc.

1. Axis perpendicular to one of the principal planes

When the axis of a solid is perpendicular to one of the planes, it is parallel to the other. Also, the projection of the solid on that plane will show the true shape of the base.

When the axis of a solid is perpendicular to H.P, the top view must be drawn first and then the front view is projected from it. Similarly when the axis of the solid is perpendicular to V.P, the front view must be drawn first and then the top view is projected from it.

Problem : *Draw the projections of a cube of 35mm side, resting on one of its faces (bases) on H.P., such that one of its vertical faces is parallel to and 10mm in front of V.P.*

Construction (Fig.6.7b)

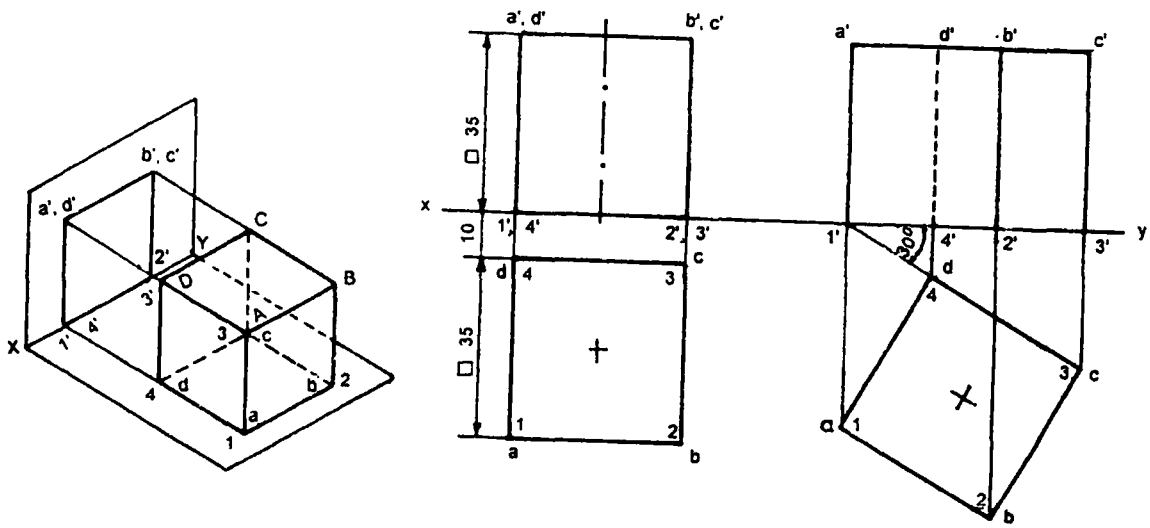

Fig. 6.7

Figure 6.7a shows the cube positioned in the first quadrant.

1. Draw the top view such that one of its edges is 10mm below xy.
2. Obtain the front view by projecrtion, keeping one of its bases on xy.

Note : (i) For the cube considered ABCD is the top base and 1234 the bottom base, (ii) Figure 6.7c shows the projections of a cube, resting on one of its bases on H.P. such that an edge of its base is inclined at 30° to V.P.

Problem : A square prism with side of base 35mm and axis 50mm long, lies with one of its longest edges on H.P such that its axis is perpendicular to V.P. Draw the projections of the prism when one of its rectangular faces containing the above longer edge is inclined at 30° to H.P.

Construction (Fig.6.8)

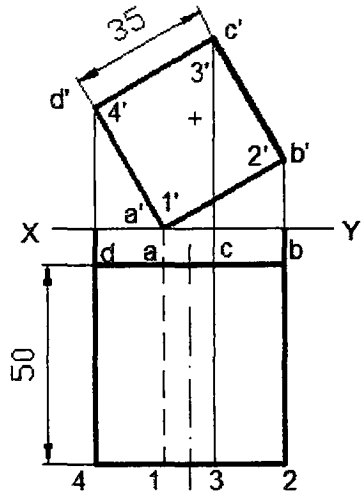

Fig. 6.8

1. Draw the front view which is a square of 35mm such that one of its corners is on xy and a side passing through it is making 30^0 with xy.
2. Obtain top view by projection, keeping the length as 50mm.

Note : The distance of the base nearer to V.P is not given in the problem. Hence, the top view may be drawn keeping the base nearer to xy at any convenient distance.

Problem : *A triangular prism with side of base 35mm and axis 50mm long is resting on its base on H.P.Draw the projections of the prism when one of its rectangular faces is perpendicular to V.P and the nearest edge parallel to V.P is 10mm from it.*

Construction (Fig.6.9)

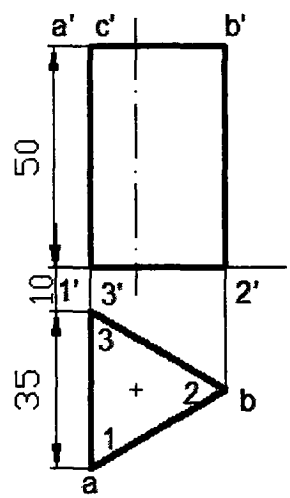

Fig. 6.9

1. Draw the top view keeping one edge perpendicular to xy and one corner at 10mm from xy.
2. Obtain the front view by projection, keeping the height equal to 50mm.

Problem : *A pentagonal prism with side of base 30mm and axis 60mm long is resting on its base on H.P such that one of its rectangular faces is parallel to VP and 15mm away from it. Draw the projections of the prism.*

Constructon (Fig.6.10)

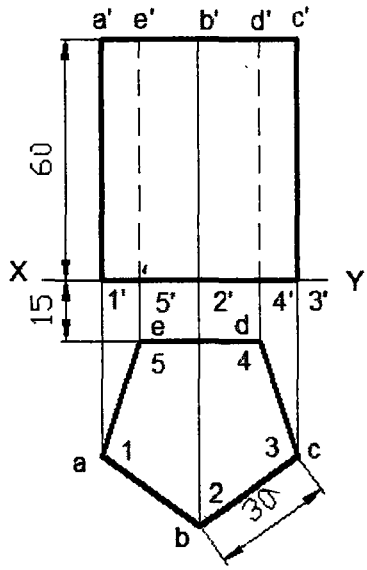

Fig. 6.10

1. Draw the top view keeping one edge of the base parallel to xy and 15mm away from it.
2. Obtain the front view by projection keeping the height equal to 60mm.

Problem : *A hexagonal prism with side of base 30mm and axis 60mm long lies with one of its longer edges on H.P such that its axis is perpendicular to V.P.Draw the projections of the prism when the base nearer to V.P is at a distance of 20mm from it.*

Construction (Fig.6.11)

1. Draw the front view keeping one corner on xy and one side making an angle of 30^0 with xy.
2. Obtain the top view by projection, keeping its length equal to 60mm and one of its bases 20mm from xy.

2. Axis parallel to both the principal planes

when the axis of solid is parallel to both the planes, neither the front view nor the top view reveal the true shape of the base. In such case, the side view must be drawn first which shows the true shape of the base. The front and top view are then projected from the side view.

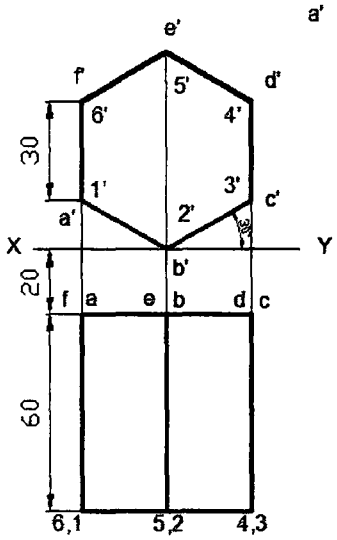

Fig. 6.11

Problem : *A hexagonal prism with side of base 25mm and axis 60mm long is lying on one of its rectangular faces on H.P. Draw the projections of the prism when its axis is parallel to both H.P and V.P.*

Construction (Fig. 6.12)

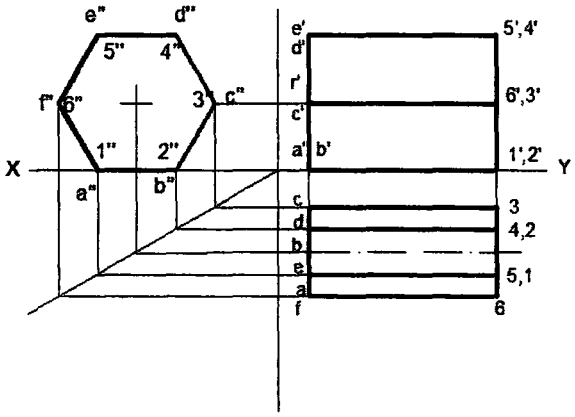

Fig. 6.12

1. Draw the right side view of the hexagon, keeping an edge on xy.
2. Draw the second reference line x_1y_1 perpendicular to xy and to the rigtht of the above view at any convenient location.
3. Obtain the front view by projection, keeping its length equal to 60mm
4. Obtain the top view by projecting the above views.

Problem : *Draw the three views of a triangular prism of side 25mm and length 50mm when its axis is parallel to H.P.*

Construction (Fig. 6.13)

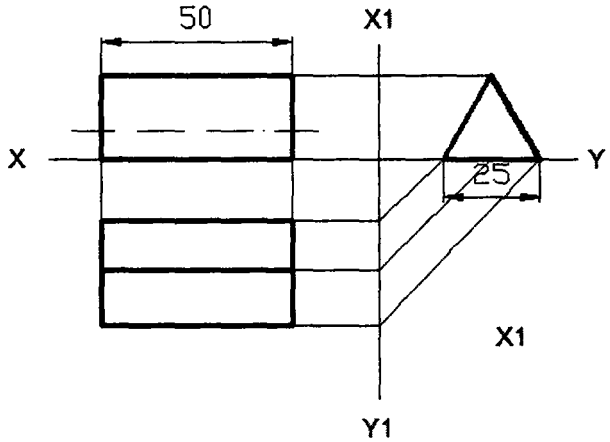

Fig. 6.13

1. Draw the left side view, an equilateral triangle of side 25mm, keeping one edge on xy.
2. Draw the reference line x_1y_1 perpendicular to xy and to the left of the above view at any convenient location.
3. Obtain the front view by projection, keeping its length equal to 50mm.
4. Obtain the top view by projecting the above two views.

Note : Rules to be observed while drawing the projections of solids.

(i) If a solid has an edge of its base on H.P or parallel to H.P, that edge should be kept perpendicular to V.P. If the edge of the base is on V.P or parallel to V.P, that edge should be kept perpendicular to H.P.

(ii) If a solid has a corner of its base on H.P, the side of the base containing that corner should be kept equally inclined to V.P. If a solid has a corner of its base on V.P, the sides of the base containing that corner should be kept equally inclined to H.P.

3. Axis inclined to one of the principal planes and parallel to the other.

When the axis of a solid is inclined to any plane, the projections are obtained in two stages. In the first stage, the axis of the solid is assumed to be perpendicular to the plane to which it is actually inclined and the projections are drawn. In second stage, the position of one of the projections is altered to statisfy the given condition and the other view is projected from it. This method of obtaining the projections is known as the change of position method.

Problem : *A pentagonal prism with side of base 30mm and axis 60mm long is resting with an edge of its base on H.P, such that the rectangular face containing that edge is inclined at 60^0 to H.P. Draw the projections of the prism when its axis is parallel to V.P.*

Construction (Fig.6.14)

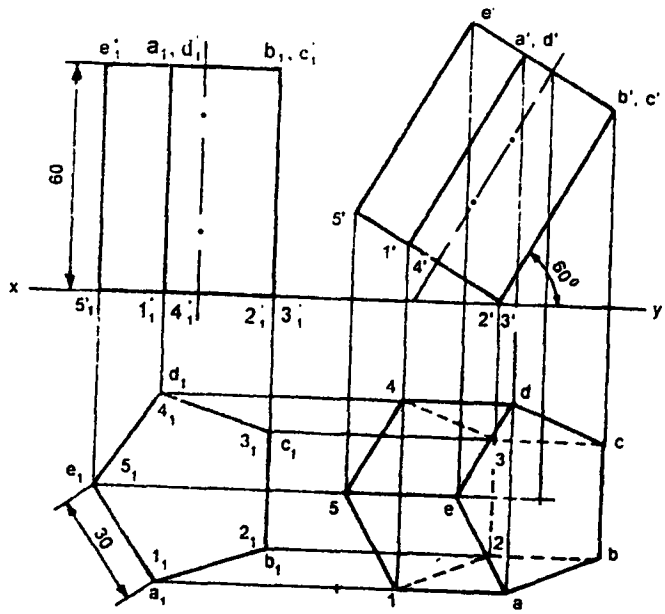

Fig. 6.12

Stage 1

Assume that the axis is perpendicular to H.P.

1. Draw the projections of the prism keeping an edge of its base perpendicular to V.P.

Stage 2

1. Rotate the front view so that the face containing the above edge makes the given angle with the H.P.
2. Redraw the front view such that the face containing the above edge makes 60^0 with xy. This is the final front view.
3. Obtain the final top view by projection.

Note : For completing the final projections of the solids inclined to one or both the principal planes, the following rules and sequence may be observed.

(i) Draw the edges of the visible base. The base is further away from xy in one view will be fully visible in the other view.

(ii) Draw the lines corresponding to the longer edges of the solid, keeping in mind that the lines passing through the visible base are invisible.

(iii) Draw the edges of the other base.

Problem : *Draw the projections of a pentagonal prism of base 25mm side and 50mm long.The prism is resting on one of its rectangular faces in V.P with its axis inclined at 45^0 to H.P.*

Construction (Fig.6.15)

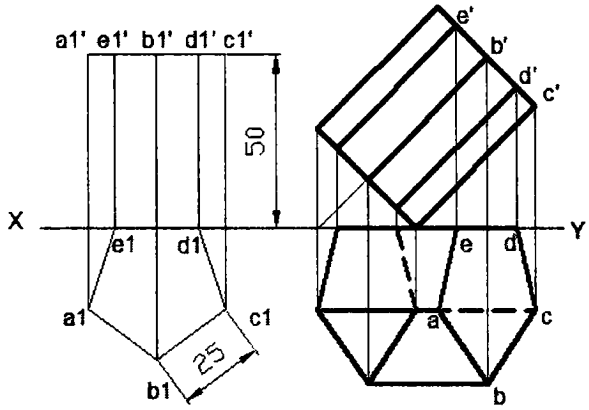

Fig. 6.15

Stage 1

Assume that the axis is perpendicular to H.P.

1. Draw the projections of the prism keeping one of its bases on H.P and a rectangular face in V.P.

Stage 2

1. Rotate the front view so that the axis makes the given angle with H.P.
2. Redraw the front view such that the axis makes 45° wth xy. This is the final front view.
3. Obtain the final top view by projection.

Problem : *A pentagonal prism with side of base 25mm and axis 50mm long lies on one of its faces on H.P., such that its axis is inclined at 45° to V.P. Draw the projections.*

Construction (Fig.6.16)

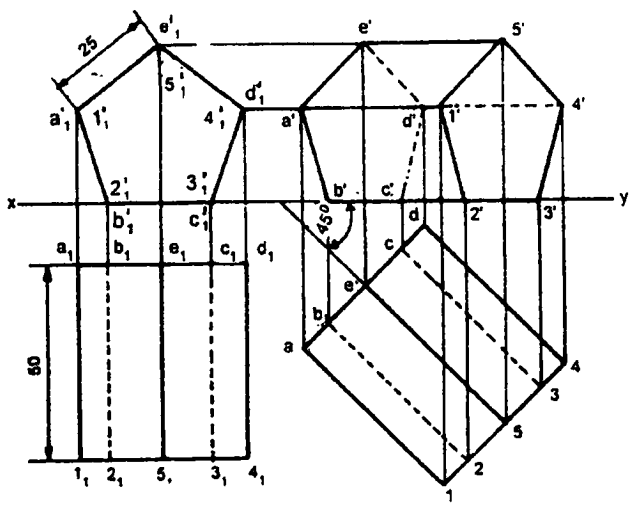

Fig. 6.16

1. Assuming that the axis is perpendicular to V.P, draw the projections keeping one side of the pentagon coinciding with xy.
2. Redraw the top view so that the axis is inclined at 45⁰ to xy. This is the final top view.
3. Obtain the final front view by projection.

Problem : *A hexagonal prism with side of base 25mm and 50mm long is resting on a corner of its base on H.P. Draw the projections of the prism when its axis is making 30⁰ with H.P and parallel to V.P.*

Construction (Fig. 6.17)

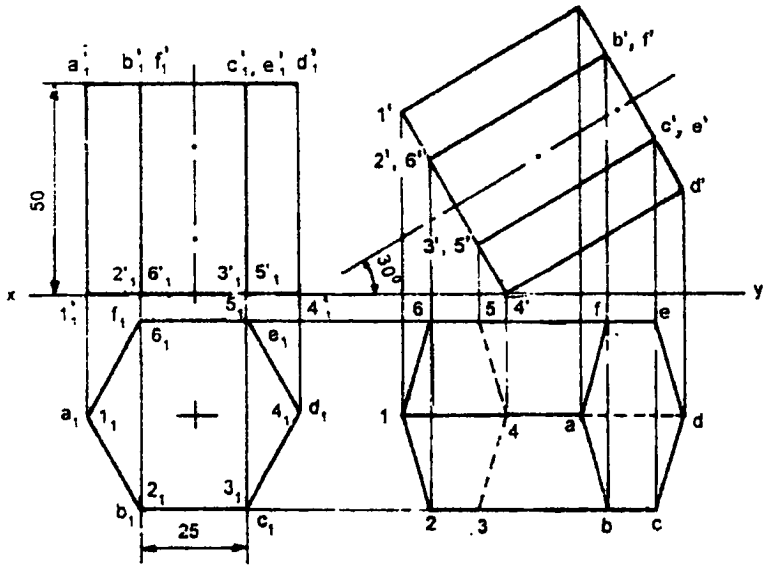

Fig. 6.17

1. Assuming that the axis is perpendicular to H.P, draw the projections of the prism, keeping two sides of the base containing the corner in the top view equally inclined to xy.
2. Redraw front view so that the axis makes 30⁰ with xy and the corner 4| lies on xy. This is the final front view.
3. Obtain the final top view by projection.

Problem : *A Hexagonal prism with side of base 25mm and axis 60mm long is resting on one of its rectangular faces on H.P. Draw the projections of the prism when its axis is inclined at 45⁰ to V.P.*

Construction (Fig.6.18)

1. Draw the projections of the prism assuming that the axis is perpendicular to V.P, with one of its rectangular faces on H.P.
2. Redraw the top view such that the axis makes 45⁰ to xy. This is final top view.
3. Obtain the final front view by projection.

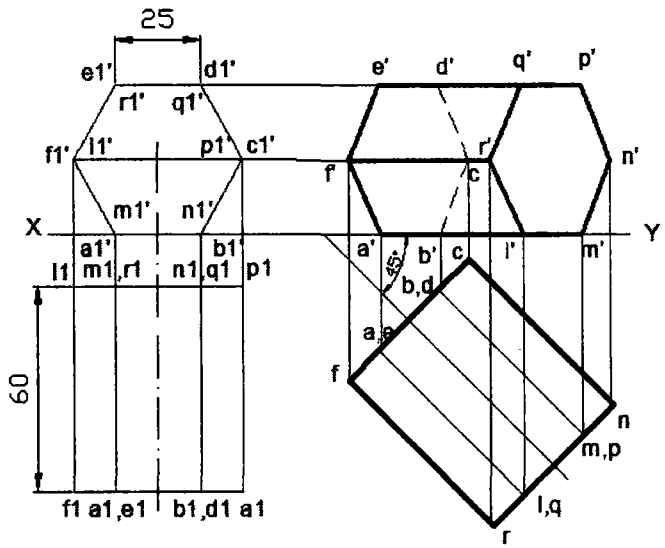

Fig. 6.18

4. Axis inclined to both the priciplal planes

A solid is said to be inclined to both the planes when (i)the axis is inclined to both the planes, (ii)the axis is inclined to one plane and an edge of the base is inclined to the other. In this case the projections are obtained in three stages.

Stage I

Assume that the axis is perpendicular to one of the planes and draw the projections.

Stage II

Rotate one of the projections till the axis is inclined at the given angle and project the other view from it.

State III

Rotate one of the projections obtained in Stage II, satisfiying the remaining condition and project the other view from it.

Problem : *A square prism with side of base 30mm and axis 50mm long has its axis inclined at 60⁰ to H.P., on one of the edges of the base which is inclined at 45⁰ to V.P.*

Construction (Fig.6.19)

1. Draw the projections of the prism assuming it to be resting on one of its bases on H.P with an edge of it perpendicular to V.P.
2. Redraw the front view such that the axis makes 60⁰ with xy and project the top view from it.
3. Redraw the top view such that the edge on which the prism is resting on H.P is inclined at 45⁰ to xy. This is the final top view.
4. Obtain the final front view by projection.

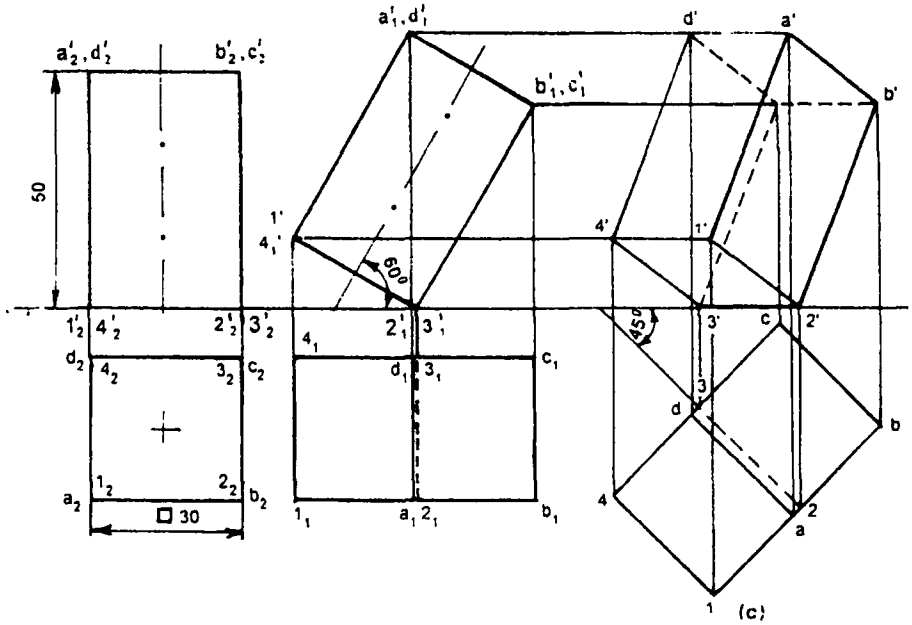

Fig. 6.19

Problem : *Draw the projections of a cube of 50mm side when it has one face in V.P and an adjacent face inclined at 30⁰ to H.P. The longer edge of the later face is on H.P.*

Construction (Fig.6.20)

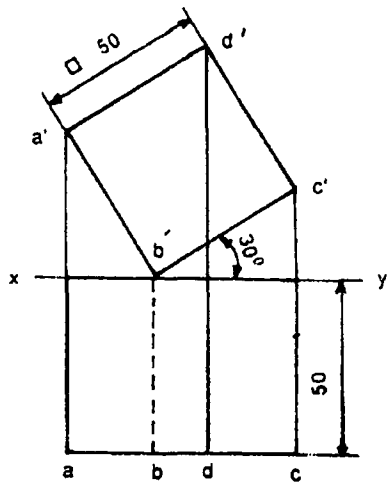

Fig. 6.20

1. Draw the front view such that one of its corners is on xy and
2. Obtain the top view by projections, keeping one of its bases on xy.

Problem : *A pentagonal prism of side of base 25mm and axis 40mm long is resting on H.P on a corner of its base. Draw the projections of the prism, when the base is inclined at 60⁰ to H.P., and the axis appears to be inclined at 30⁰ to V.P.*

Construction (Fig.6.21)

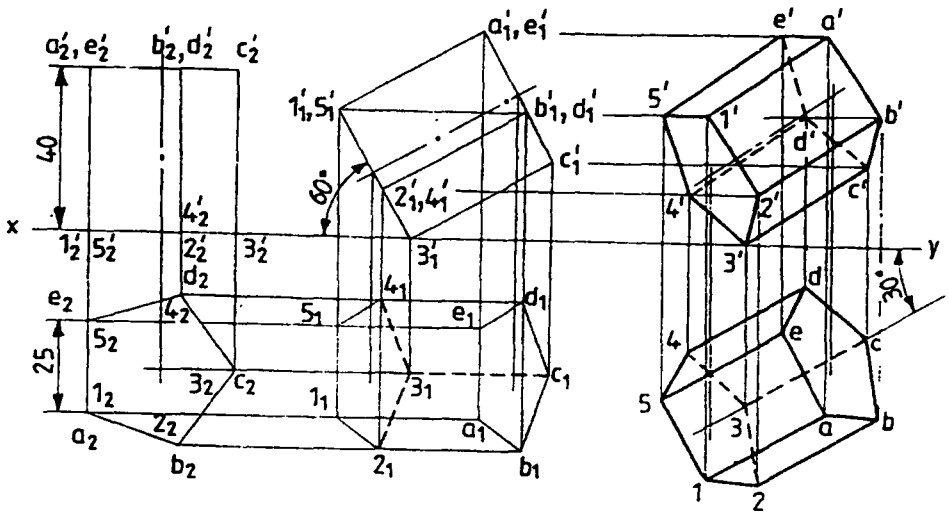

Fig. 6.21

1. Draw the projections of the prism assuming that it is resting on its base on H.P., with two adjacent edges of the base equally inclined to V.P.
2. Redraw the front view such that the corner 3^1 lies on xy and the front view of the base 1-2-3-4-5 makes an angle 60⁰ with xy.
3. Obtain the second top view by projection.
4. Redraw the above top view such that its axis makes an angle 30⁰ with xy.
5. Obtain the final view by projection.

Problem : *A hexagonal prism of base 25mm and 45mm long is positioned with one of its base edges on H.P such that the axis is inclined at 30⁰ to H.P. and 45⁰ to V.P. Draw its projections.*

Construction (Fig. 6.22)

1. Draw the projections of the prism assuming that it is resting on its base on H.P. and with an edge of the base perpendicular to V.P.
2. Redraw the front view such that the front view of the base edge 3-4 lies on xy and the axis makes an angle 30⁰ with xy.
3. Obtain the second top view by projection.
4. Determine the apparent angle β, the inclination the axis makes with xy in the final top view.
5. Redraw the top view such that its axis makes angle β with xy.
6. Obtain the final front view by projection.

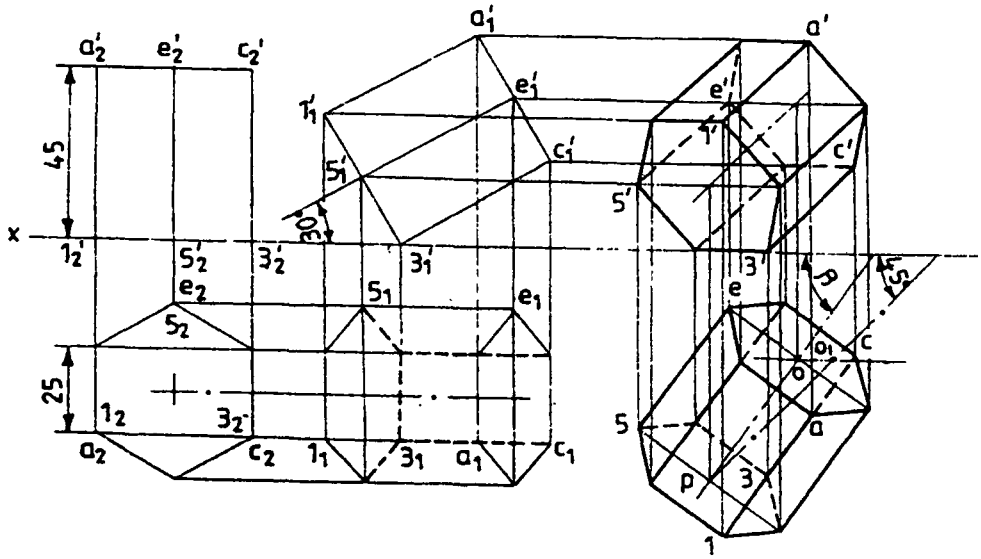

Fig. 6.22

Problem : A cube of edge 35mm is resting on H.P on one of its corners with a solid diagona' perpendicular to V.P. Draw the porjections of the cube.

Construction (Fig.6.23)

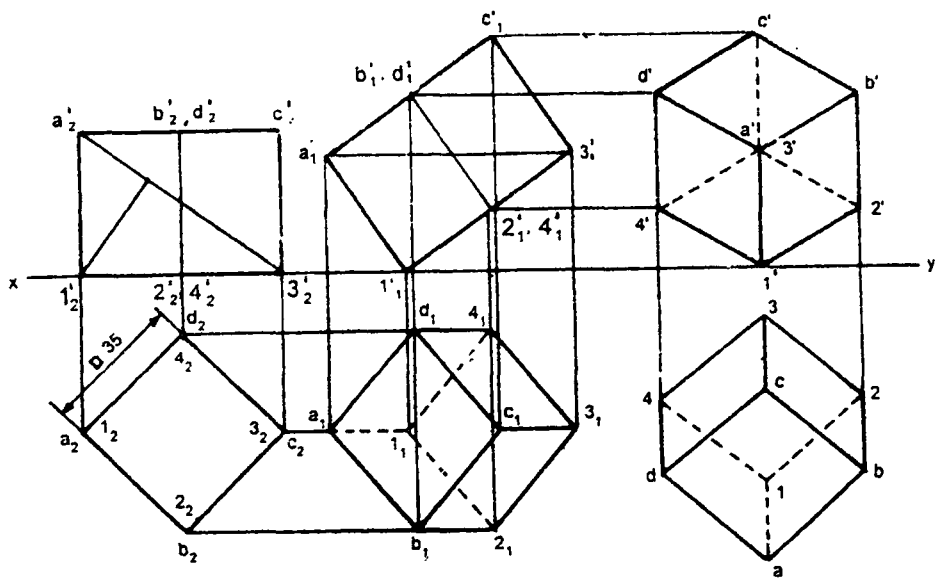

Fig. 6.23

1. Draw the projections of the cube assuming that it is lying on H.P on one of its bases and vertical faces and vertical faces are equally inclined to V.P.
2. Locate any solid diagonal say $a^1_2\ 3^1_2$

3. Redraw the front view so that the solid diagonal $a^1_1\ 3^1_1$ is parallel to xy.
4. Obtain the top view by projection.
5. Redraw the above view so that the solid diagonal a_3 is perpendicular to xy. This is the final top view.
6. Obtain the final front view by projection.

6.7 Pyramids

Problem : *A square pyramind with side of base 30mm and axis 50mm long is resting with its base on H.P. Draw the projections of the pyramid when one of its base edges is parallel to V.P. The axis of the pyramid is 30mm in front of V.P.*

Construction (Fig.6.24)

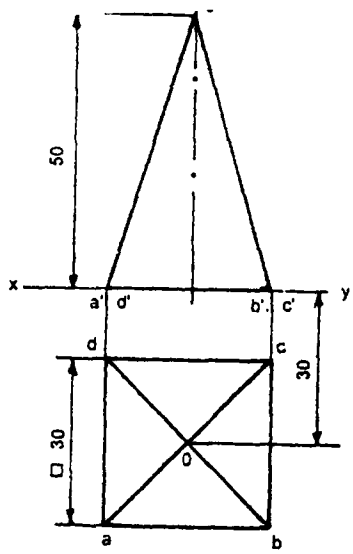

Fig. 6.24

1. Draw the top view, a square, keeping its centre at 30mm from xy and with an edge parallel to xy.
2. Obtain the front view by projection keping the height equal to 50mm and the base lying on xy.

Problem : *A tetrahedron of side 40mm is resting with one of its faces on H.P. Draw the projections when edge of the face lying on H.P is (i)perpendicular to V.P and (ii)parallel to and 10mm in front of H.P.*

(i) Construction (5.25(a))

1. Draw the top view keeping one side perpendicular to xy. The lines **oa, ob, oc** represent the slant edges of the tetrahedron. The line **ob** is the top view of the stant edge OB. As it is parallel to xy, the length of its front view represents the true length of the edge.
2. Project the front view of the base $a^1\ b^1\ c^1$ on to xy.

3. Draw a projector through **o**.
4. With centre $\mathbf{b^1_1}$ and radius equal to the length of side draw an arc intersecting the above projector at $\mathbf{o^1}$.
5. Join $\mathbf{o^1}$, $\mathbf{a^1}$, $(\mathbf{c^1})$ and $\mathbf{o^1}$,$\mathbf{b^1}$ forming the front view.

(ii) Construction (Fig.6.25b)

1. Draw the top view of the tetrahedron, keeping one side of the base parallel to and 10mm below xy.
2. Obtain the front view of the base $a^1b^1c^1$ on to xy by projection.
3. Draw a projector through o.
4. Rotate ob about o to ob_1 prallel to xy.
5. Through b^1_1 draw a projector to meet xy at b^1_1.
6. With centre b^1_1 and radius equal to the length of side, draw an arc meeting the projector through **o** at $\mathbf{o^1}$.
7. Join $\mathbf{o^1}$-$\mathbf{a^1}$, $\mathbf{o^1}$-$\mathbf{b^1}$, $\mathbf{o^1}$-$\mathbf{c^1}$, forming the front view.

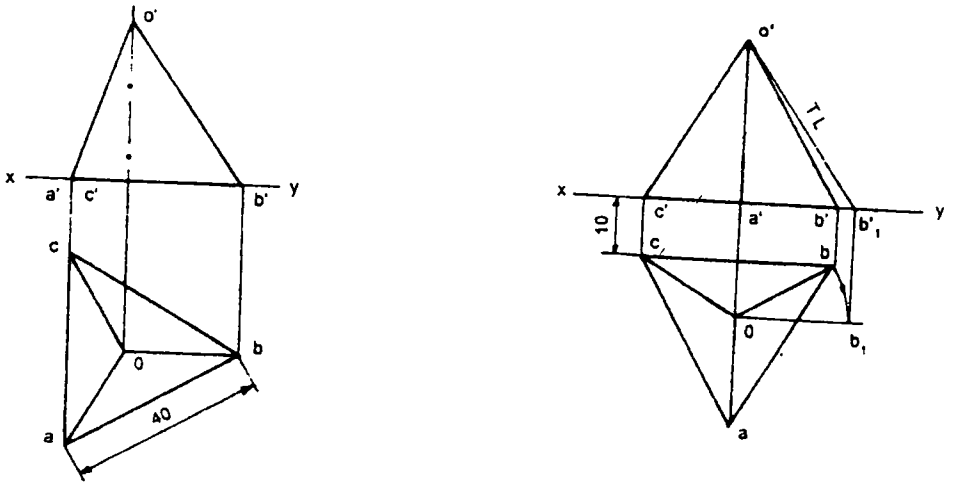

Fig 6.25

Problem : *Draw the projections of a pentagonal pyramid of side of base 30mm and axis 50mm long when its axis is perpendicular to V.P and an edge of its base is perpendicular to H.P.*

Construction (Fig. 6.26)

1. Draw the front view of the pyramind which is a pentagon, keeping one of its sides perpendicular to xy.
2. Obtain the top view by projection keeping the axis length equal to 50mm

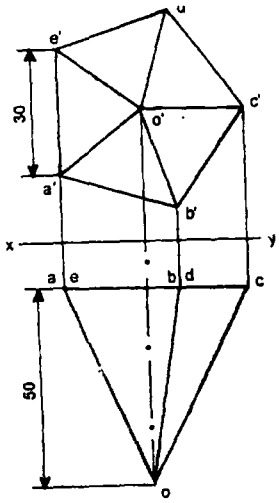

Fig. 6.26

Problem : *A pentagonal pyramid of base 30mm side and axis 50mm long has its apex in V.P and the axis perpendicular to V.P. a corner of the base is resting on the ground and the side of the base contained by the corner is inclined at 30⁰ to the ground. Draw its projections.*

Construction (Fig.6.27)

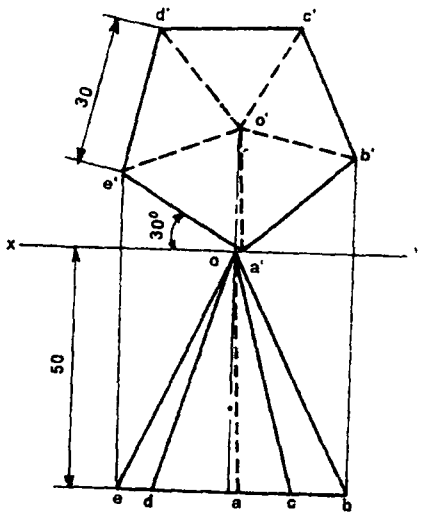

Fig. 6.27

1. Draw the front view of the pyramid which is a pentagon of side 30mm, keeping one of its corners on xy and an edge from that corner inclined at 30⁰ with xy.
2. Obtain the top view by projection keeping the axis length equal to 50mm and the apex **o** lying on xy.

Problem : *A hexagonal pyramid with side of base 30mm and axis 60mm long is resting with its base on H.P., such that one of the base edges is inclined to V.P at 45⁰ and the axis is 50mm in front of V.P.*

Construction (Fig.6.28)

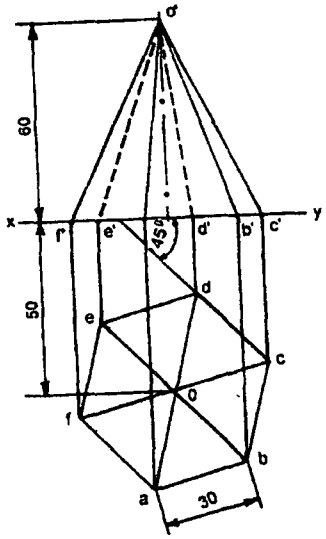

Fig. 6.28

1. Draw the top view, keeping one side of the base inclined at 45⁰ to xy and the centre of the hexagon at 50mm below xy.
2. Obtain the front view by projection, keeping the axis length equal to 60mm.

Problem : *A pentagonal pyramid with side of base 30mm and axis 60mm long rests with an edge of its base on H.P such that its axis is parallel to both H.P and V.P. Draw the projection of the solid.*

Construction (Fig.6.29)

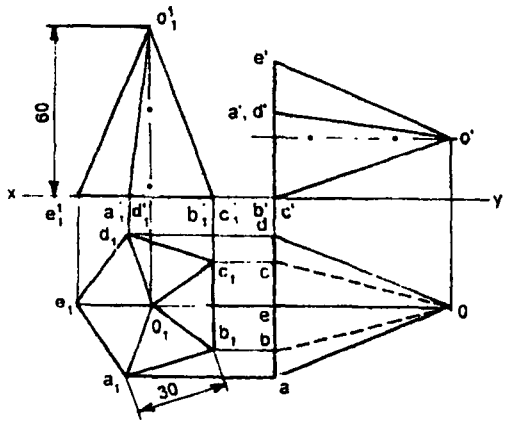

Fig. 6.29

1. Draw the projections of the pyramid with its base on H.P and an edge of the base (BC) perpendicular to V.P.
2. Redraw the front view such that b(c) lies on xy and the axis is parallel to xy which is the final front view.
3. Obtain the final top view by projection.

Problem : *A pentagonal pyramid with side of base 25 and axis 50mm long is resting on one of its faces on H.P such that its axis is parallel to V.P. Draw the projections.*

Construction (Fig.6.30)

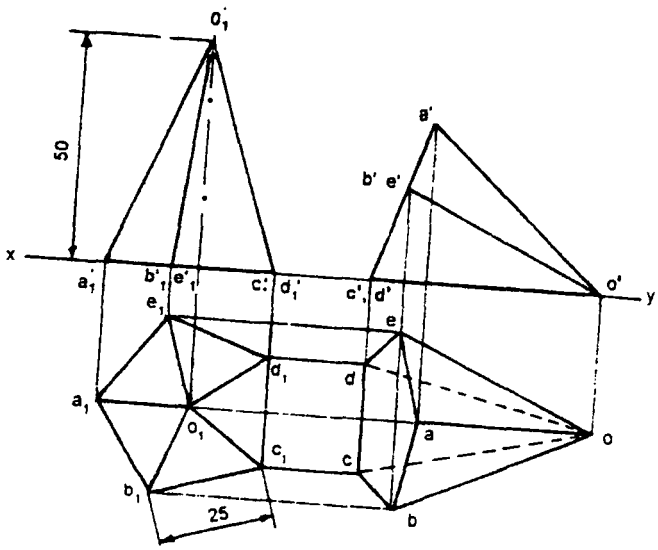

Fig. 6.30

1. Assuming the axis is perpendicular to H.P draw the projections keeping one edge of the base perpendicular to V.P.
2. Redraw the front view so that the line **o'-c(d)** representing the slant face, coincides with xy. This is the final front view.
3. Obtain the final top view by projection.

Problem : *A pentagonal pyramid with side of base 35mm and axis 70mm long is lying on one of its base edges on H.P so that the highest point of the base is 25mm above H.P., and an edge of the base is perpendicular to V.P.*

Construction (Fig.6.31)

1. Draw the projections of the pyramid, assuming that it is resting on its base on H.P and one edge of the base is perpendicular to V.P.
2. Redraw the front view so that the corner **c'** of the base is 25mm above xy forming final front view.
3. Obtain the final top view by projection.

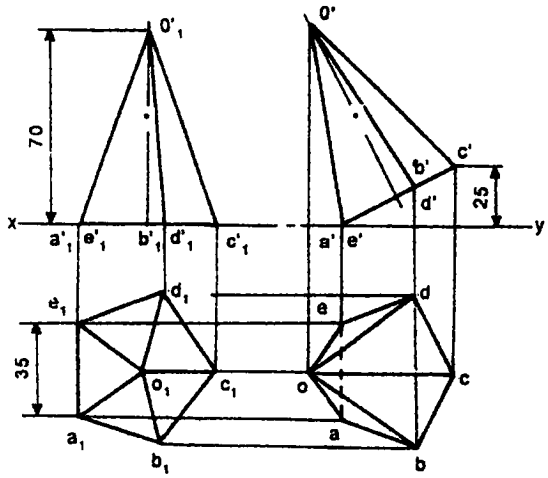

Fig. 6.31

Problem : *Draw the projections of a pentagonal pyramid with a side of base 30mm and axis 70mm long when (i)one of its triangular faces is perpendicular to H.P and (ii)one of its slant edges is vertical.*

Construction (Fig.6.32)

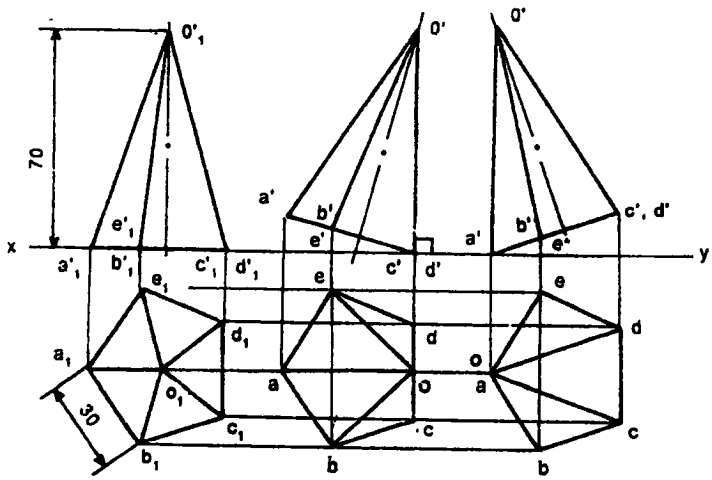

Fig. 6.32

1. Draw the projections of the pyramid assuming that it is resting on its base on H.P with an edge of the base perpendicular to V.P.

   Case (i)

2. Redraw the front view such that the front view of the face OCD is perpendicular to xy (the line o'c'(d')).

3. Obtain the top view by projection.

Case (ii)

4. Redraw the front view such that front view of the edge OA is perpendicular to xy (the line o^la^l)
5. Obtain the top view by projection.

6.8 Cone and cylinder

Problem : *Draw the projection of a cone of base 40mm diameter, axis 60mm long when it is resting with its base on H.P.*

Construction (Fig. 6.33)

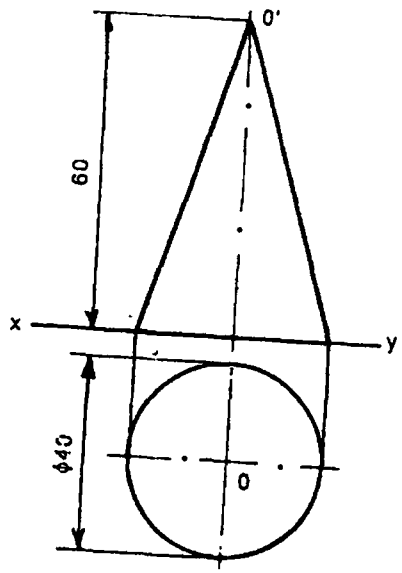

Fig. 6.33

1. Draw the reference line xy and locate **o** at a convemient distance below it.
2. With centre **o** and radius 20mm draw a circle forming the top view.
3. Obtain the front view by projection, keeping the height equal to 60mm and the base coinciding with xy.

Problem : *Draw the projections of a cone with diameter of the base as 40mm and axis 70mm long with its apex on H.P and 35mm from V.P. The axis is perpendicular to H.P.*

Construction (Fig.6.34)

1. Draw the reference line xy and locate **o** at 35mm below it.
2. With **o** as centre draw a circle of diameter 40mm which is the top view of the cone.
3. Obtain the front view by projection, keeping the height equal to 70mm and the apex o^l on xy.

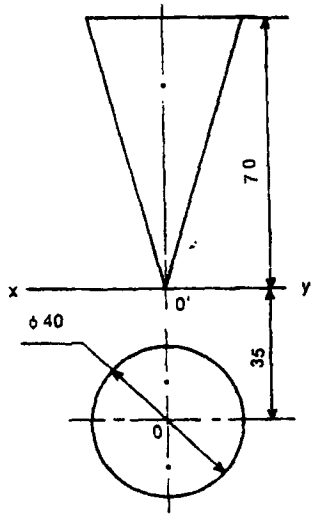

Fig. 6.34

Problem : *A cone with base 30mm diameter and axis 45mm long lies on a point of its base on V.P such that the axis makes an angle 45⁰ with V.P. Draw the projections of the cone.*

Construction (Fig.6.35)

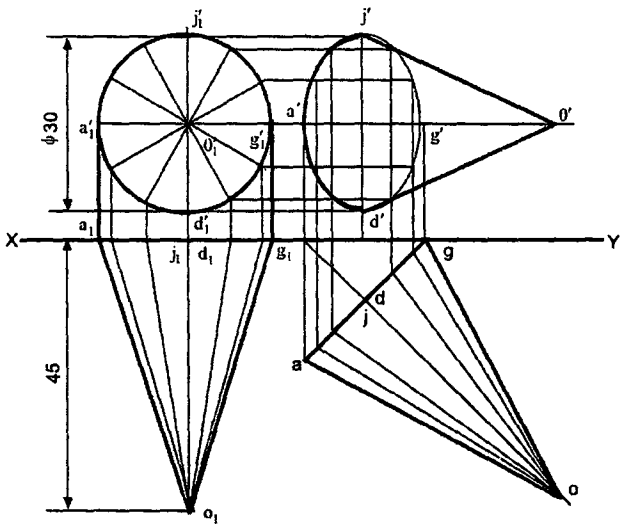

Fig. 6.35

1. Draw the projections of the cone assuming that the cone is resting with its base on V.P.
2. Divide the circle into a number of equal parts and draw the corresponding generators in the top view.
3. Redraw the top view so that the axis makes 45⁰ with xy. This is the final top view.
4. Obtain the final view by projection.

Problem : *Draw the projecitons of a cylinder of base 30mm diameter and axis 45mm long when it is resting with its base on H.P and axis 20mm in front of V.P.*

Construction (Fig.6.36)

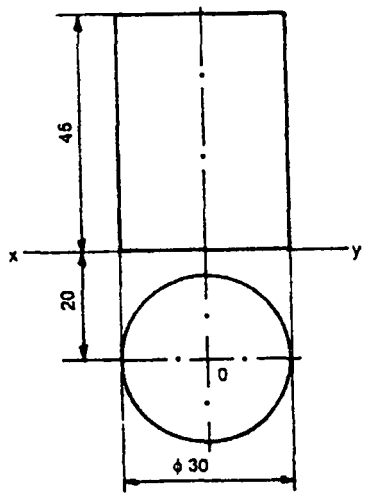

Fig. 6.36

1. Draw the reference line xy and locate **o** at 20mm below it.
2. With centre **o** and radius 15mm draw a circle forming the top view.
3. Obtain the front view by projection, keeping the height equal to 45mm and the base coinciding with xy.

Problem : *A cylinder with base 40mm diameter and 50mm long rests on a point of its base on H.P such that the axis makes an angle of 30⁰ with H.P. Draw the projections of the cylinder.*

Construction (Fig.6.37)

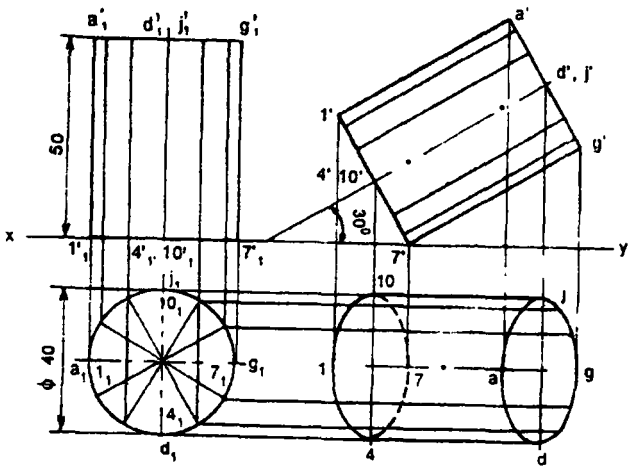

Fig. 6.37

1. Draw the projeciton of the cylinder assuming that the cylinder is resting with its base on H.P.
2. Divide the circle into a number of equal parts and obtain the corresponding generators in the front view.
3. Redraw the front view such that its axis makes 30^0 with xy. This is the final front view.
4. Obtain the final top view by projection.

Problem : *Draw the projections of a cylincder of 75mm diameter and 100mm long lying on the ground with its axis inclined at 30^0 to V.P. and parallel to the ground.*

Construction (Fig.6.38)

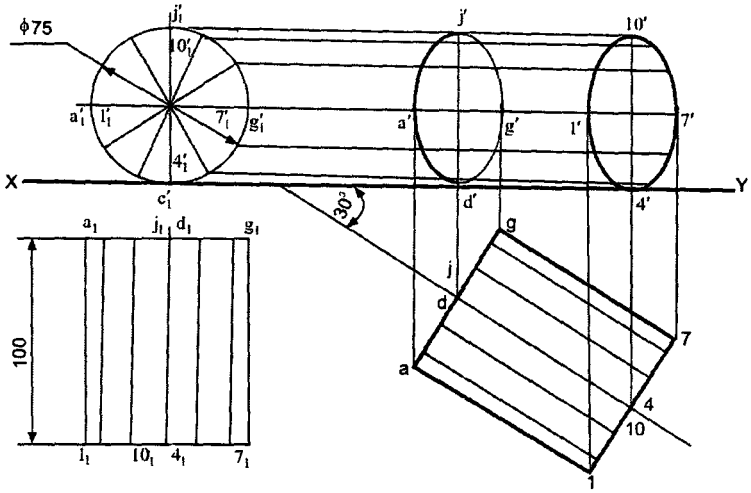

Fig. 6.38

1. Draw the projeciton of the cylinder assuming that the cylinder is resting on H.P. with its axis perpendicular to V.P
2. Redraw the top view such that its axis makes 30^0 with xy, This is the final top view.
3. Obtain the final front view by projection.

Problem : *A cylinder of base 30mm diameter and axis 45mm long is resting on a point of its base on H.P so that the axis is inclined at 30^0 with H.P. Draw the projections of the cylinder when the top view of the axis is inclined at 45^0 with xy.*

Construction (Fig.6.39)

1. Draw the projection of the cylinder assuming it to be resting on its base on H.P.
2. Redraw the front view so that the axis is inclined at 30^0 with xy.
3. Obtain the top view by projection.
4. Redraw the above view so that the top view of the axis is inclined at 45^0 with xy. This is the final top view.
5. Obtain the front view by projection.

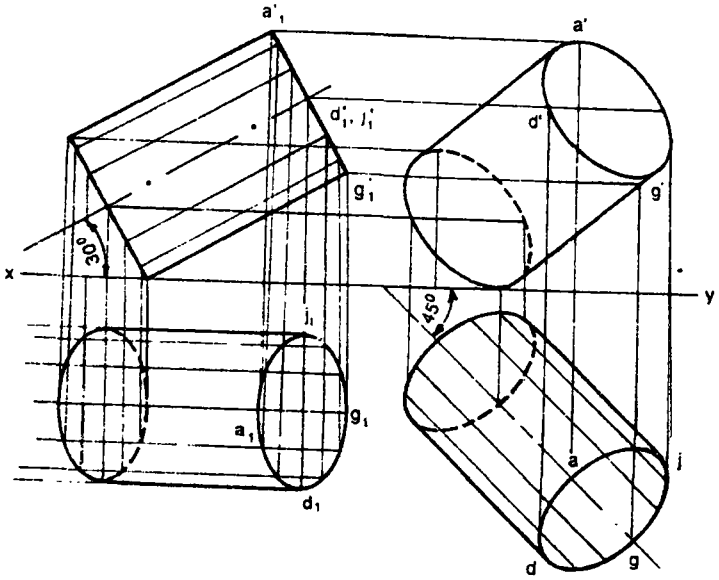

Fig. 6.39

Problem : Draw the projections of a hexagonal prism of base 25mm side and axis 60mm long, when it is resting on one of its corners of the base on H.P. The axis of the solid is inclined at 45° to H.P.

Solution : **(Fig.6.40)**

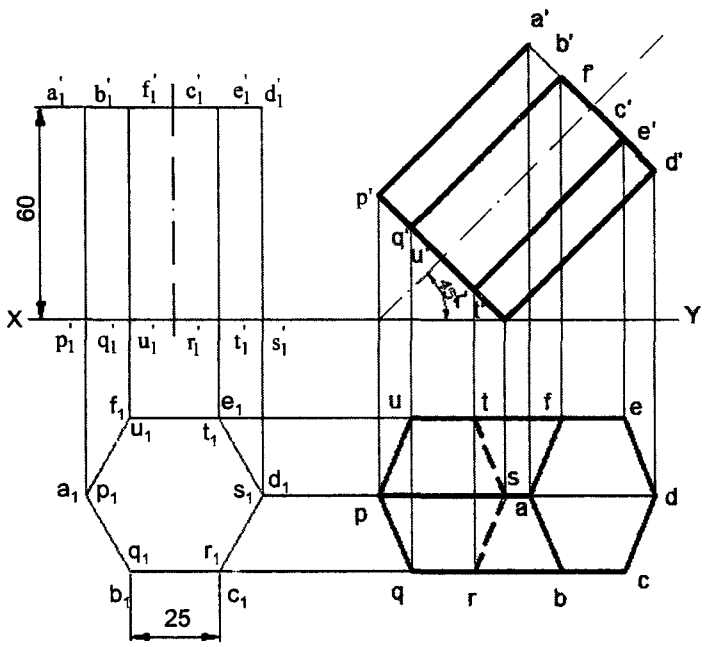

Fig. 6.40

Problem : A hexagonal prism of side of base 25mm and axis 60mm long lies with one of its rectangular faces on the H.P., such that the axis is inclined at 45° to the V.P. Draw its projections.

Solution : **(Fig.6.41)**

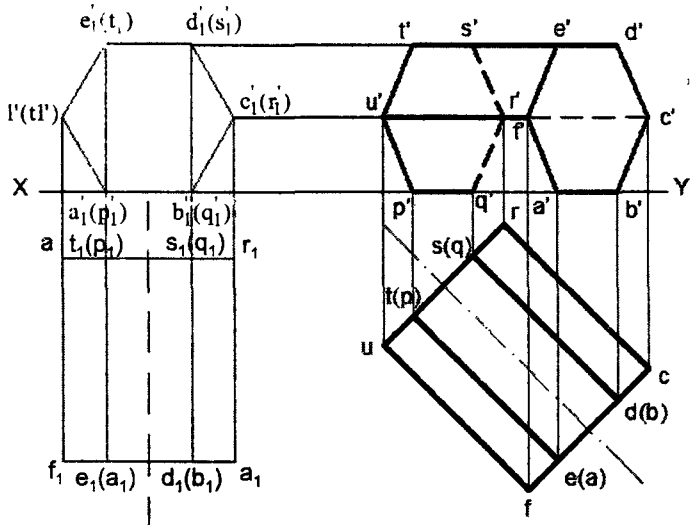

Fig. 6.41

Problem : Draw the projections of an hexagonal prism, side of base 20mm and altitude 50mm, when a side of base is on H.P and the axis is inclined at 60° to the H.P. The axis is parallel to V.P.

Solution : **(Fig.6.42)**

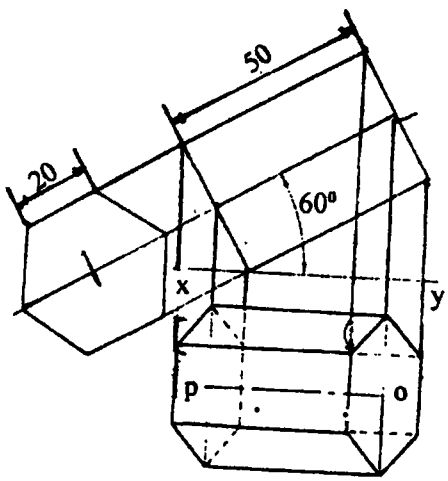

Fig. 6.42

Problem : Draw the projections of a cylinder of 40mm diameter and axis 60mm long, when it is lying on H.P, with its axis inclined at 45° to H.P and parallel to V.P.

Solution : **(Fig. 6.43)**

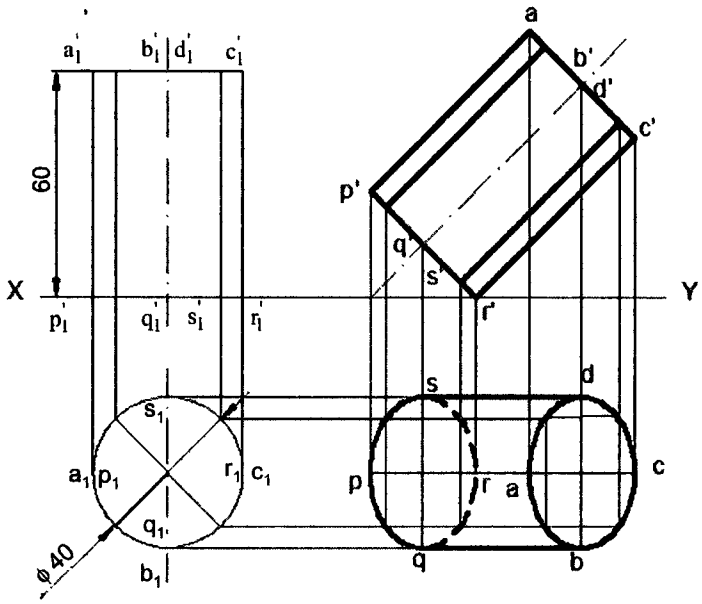

Fig. 6.43

Problem : A pentagonal pyramid, side of base 25mm and axis 50mm long, lies with one of its slant edges on H.P. such that its axis is parallel to V.P. Draw its projections.

Solution : **(Fig.6.44)**

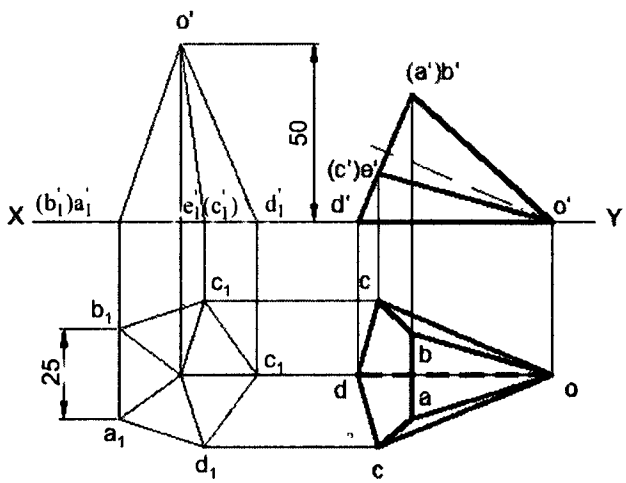

Fig. 6.44

Problem : A right circular cone 50mm base diameter and 80mm height rests on the ground on one of the points of the base circle. Its axis is inclined to H.P at 50^0 and to V.P at 30^0 . Draw the projections of the cone.

Solution : **(Fig.6.45)**

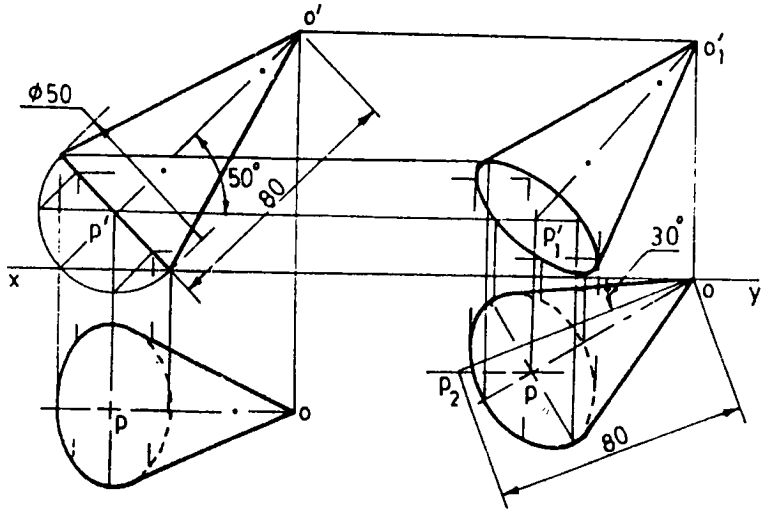

Fig. 6.45

6.9 Application of Orthographic Projections

6.9.1 Selection of views

The number of views required to describe an object depends upon the extent of complexity involved in it. The higher the symmetry the lesser the number of views required to be drawn.

6.9.2 Simple solids

The orthographic views of some of the simple solids are shown in Fig.6.46. In some cases a solid can be fully described by one view, in some cases by two views.

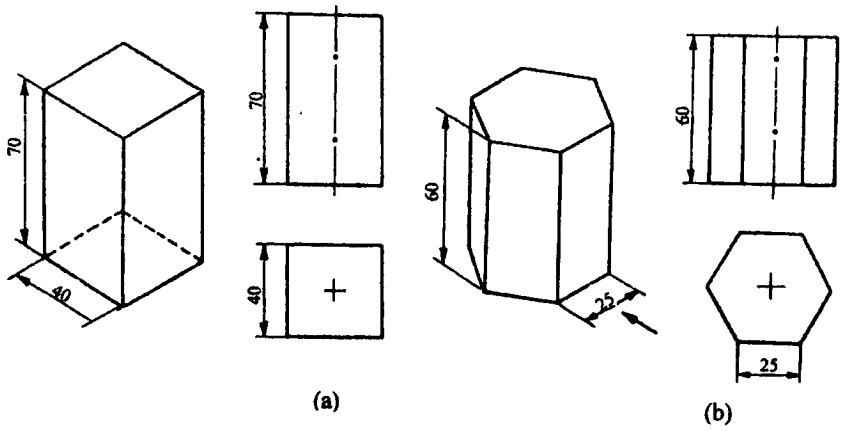

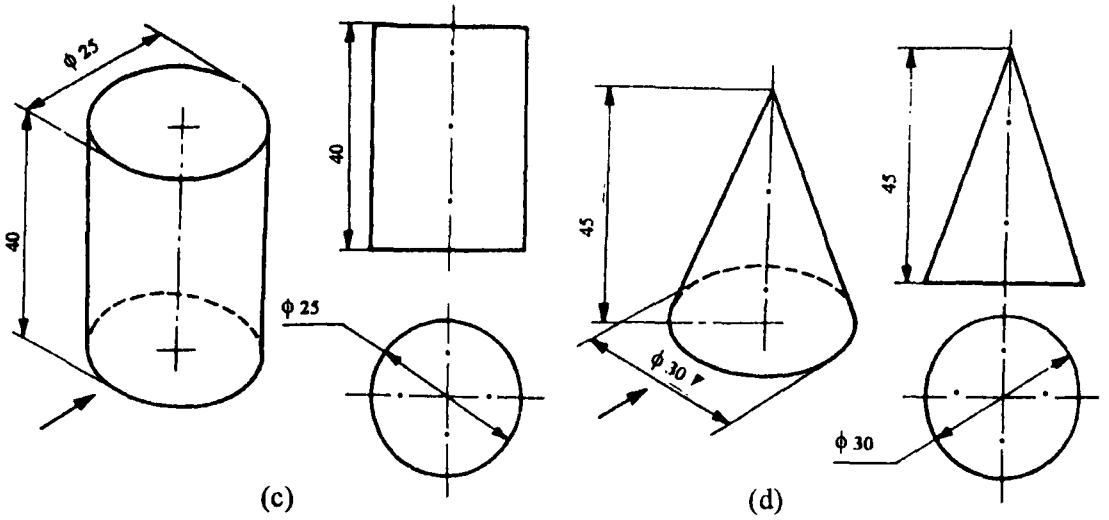

Fig. 6.46

6.9.3 Three View Drawings

In general, three views are required to describe most of the objects. In such cases the views normally selected are : the front view, top view and left or right side view. Fig.6.47 shows an example in which three views are essential to describe the object completely.

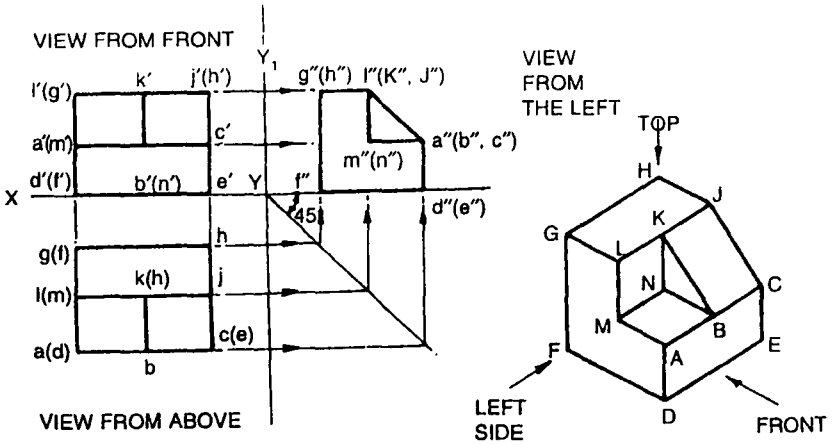

Fig. 6.47 Three View Drawing

6.9.4 Development of Missing Views

When two views of an object are given the third view may be developed by the use of mitre line as described in the following example.

(a) To develop the right side view from the given front and top views.

Construction (Fig. 6.48)

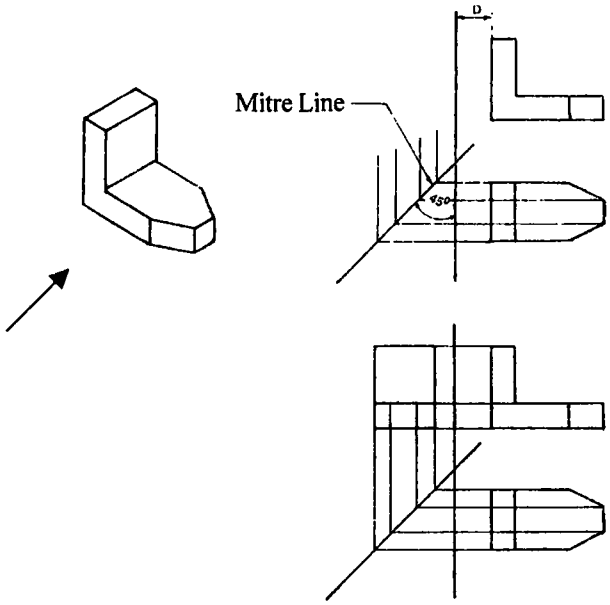

Fig. 6.48

1. Draw the given front and top views.
2. Draw projection lines to the left of the top view.
3. Draw a vertical reference line at any convement distancd D from the front view.
4. Draw a mitre line at 45^0 to the vertical
5. Through the points of intersection between the mitre line and the above projection lines draw vertical projection lines.
6. Join the points of intersection in the ordr and obtain the required view.

(b) Figure 5.49 illustrates the method of obtianing the top views from the given front and left side views.

(c) Figure 6.50 shows the correct positioning of the three orthographic views.

Examples

For examples given note the following:

Figure a - Isometric projection

Figure b - Orthographic projections

Direction of arrow - Direction to obtain the front view.

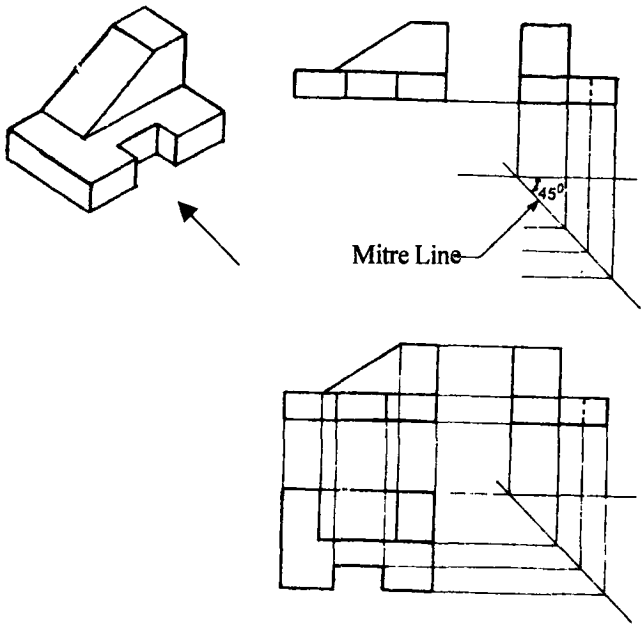

Fig. 6.49

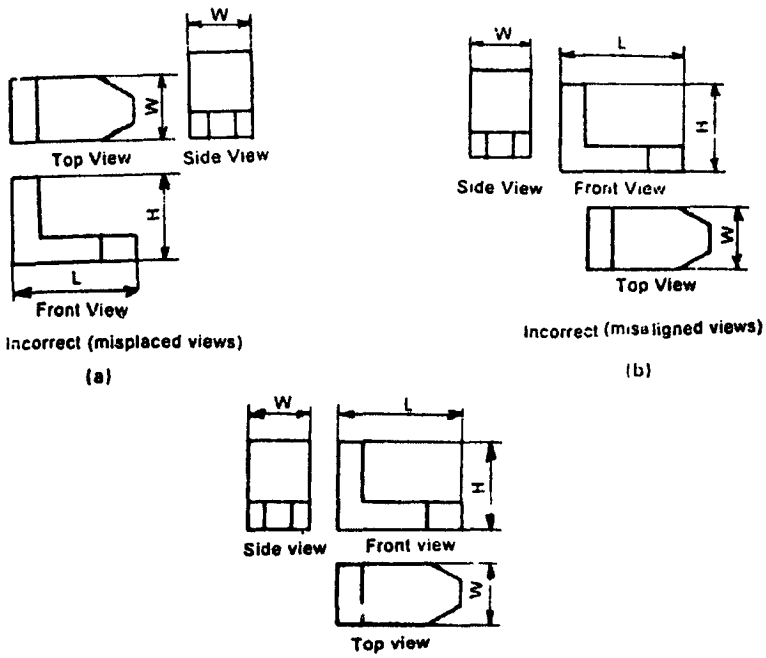

Fig. 6.50

Example 1

In the following figures form 6.51 to 6.72 the isometric projection of some solids and machine components are shown for which the three orthgraphic views are given in first angle projection.

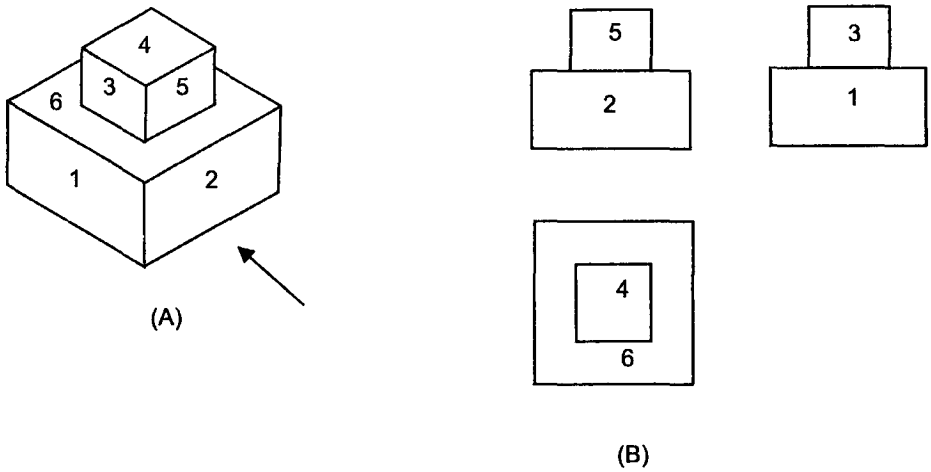

Fig. 6.51

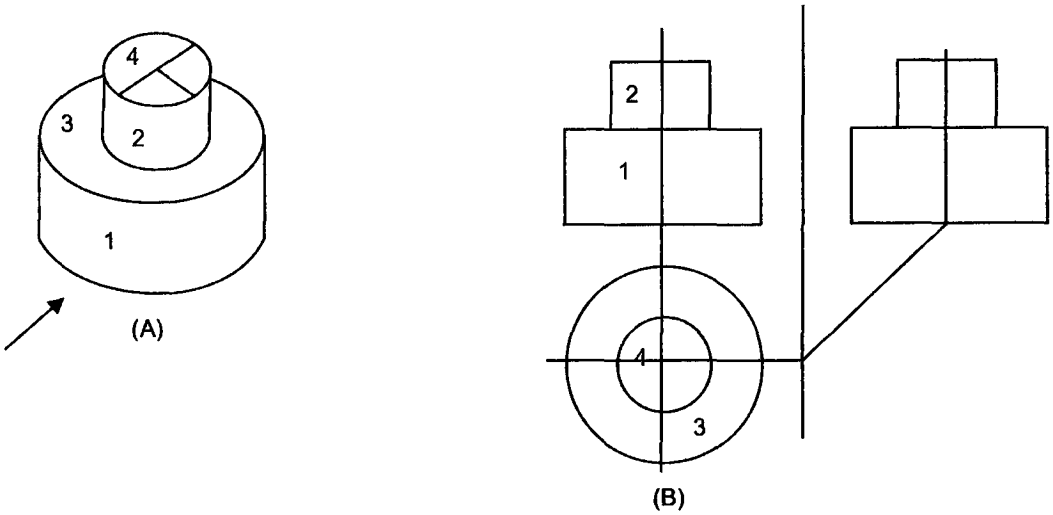

Fig. 6.52

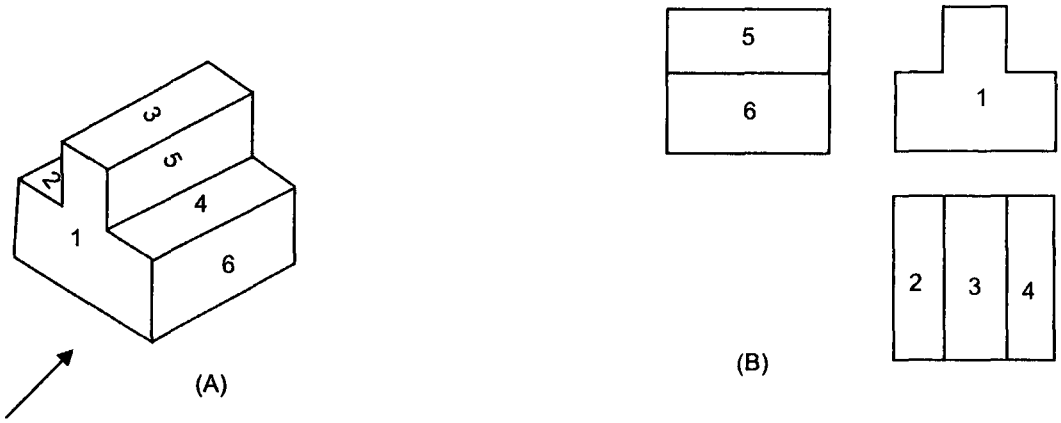

Fig. 6.53

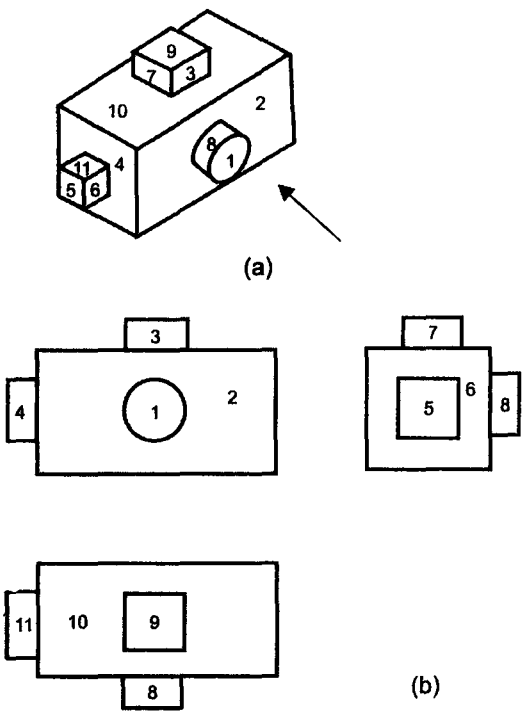

Fig. 6.54

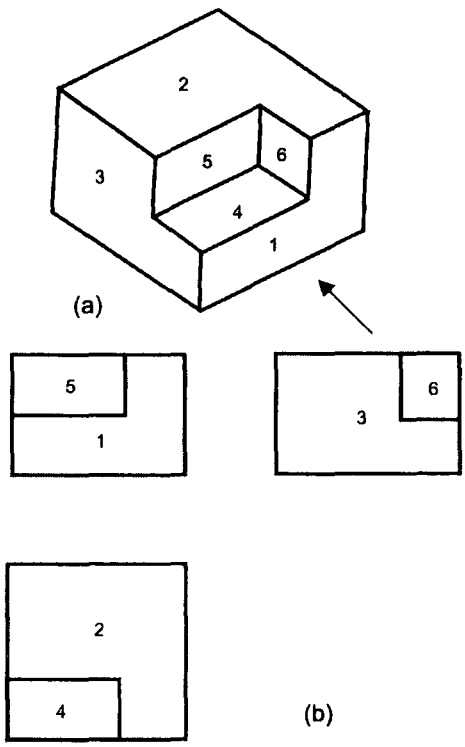

Fig. 6.55

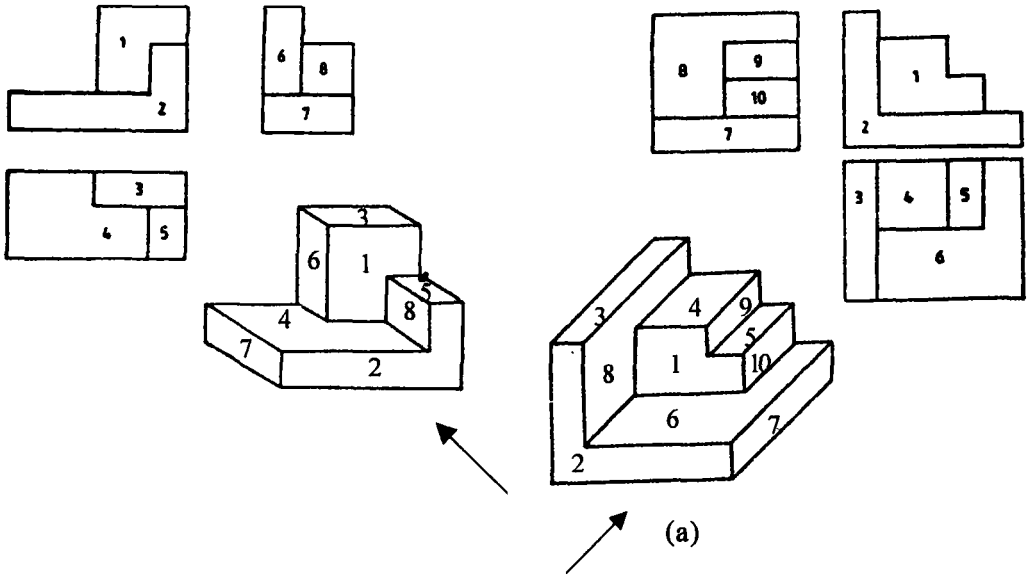

Fig. 6.56(a) & 6.57

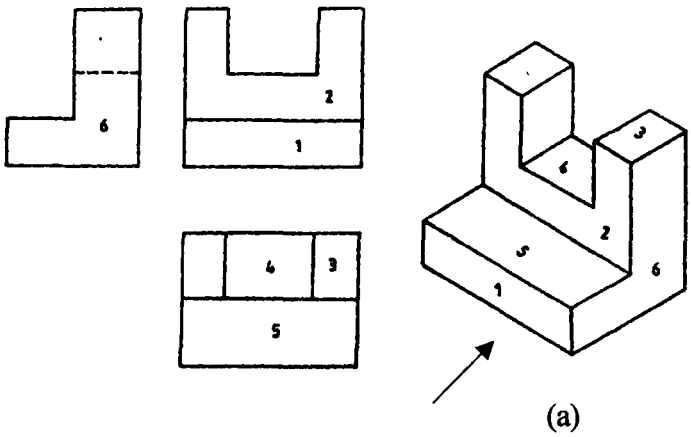

Fig. 6.58

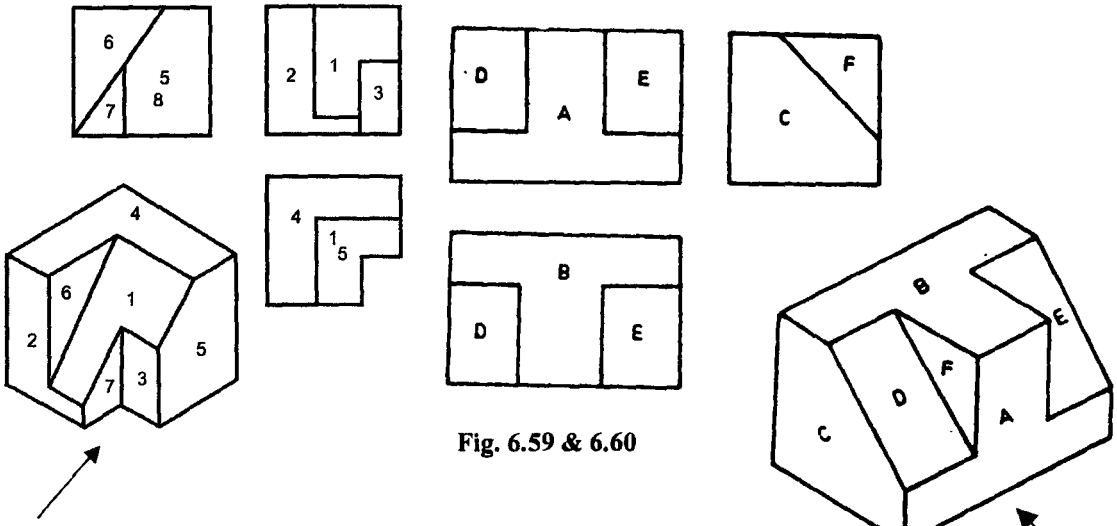

Fig. 6.59 & 6.60

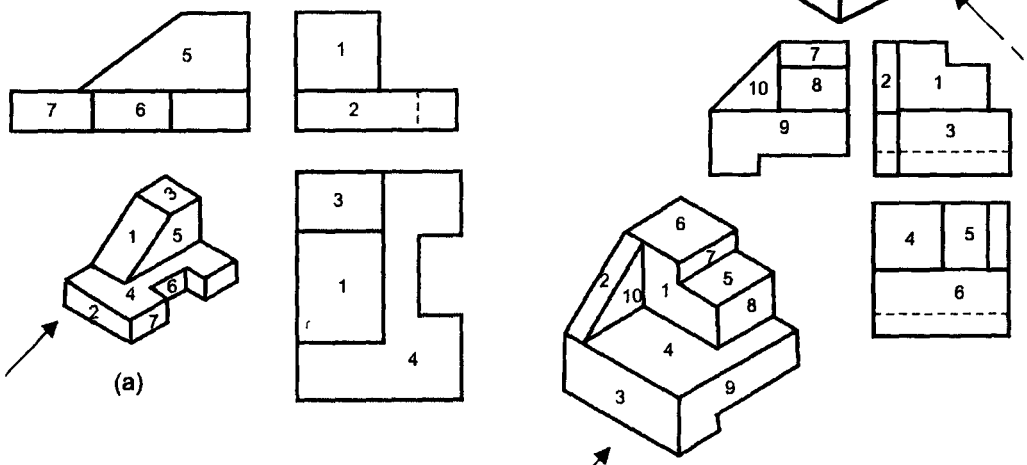

Fig. 6.61 & 6.62

(a)

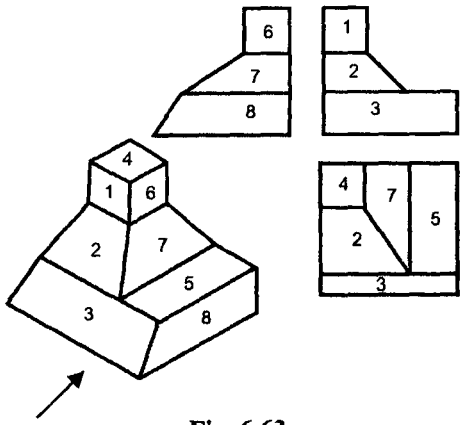

Fig. 6.63

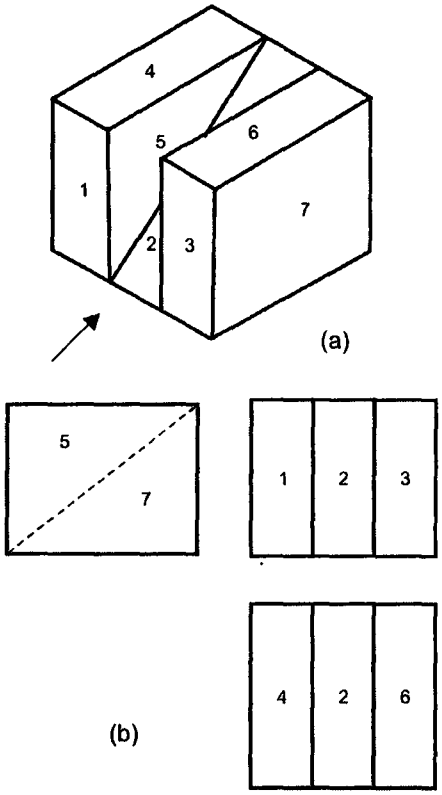

Fig. 6.64

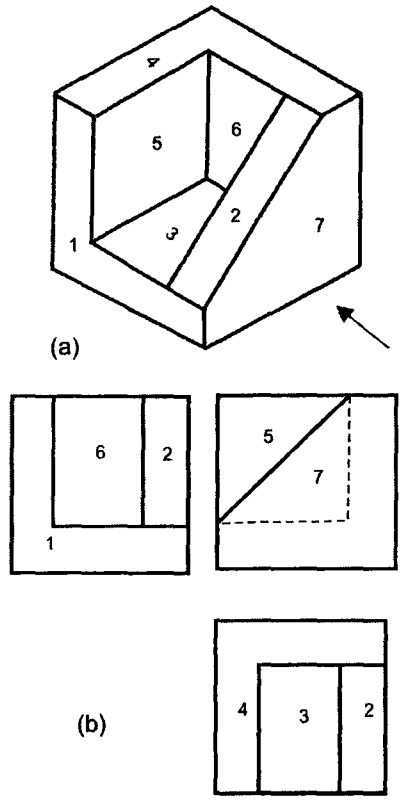

Fig. 6.65

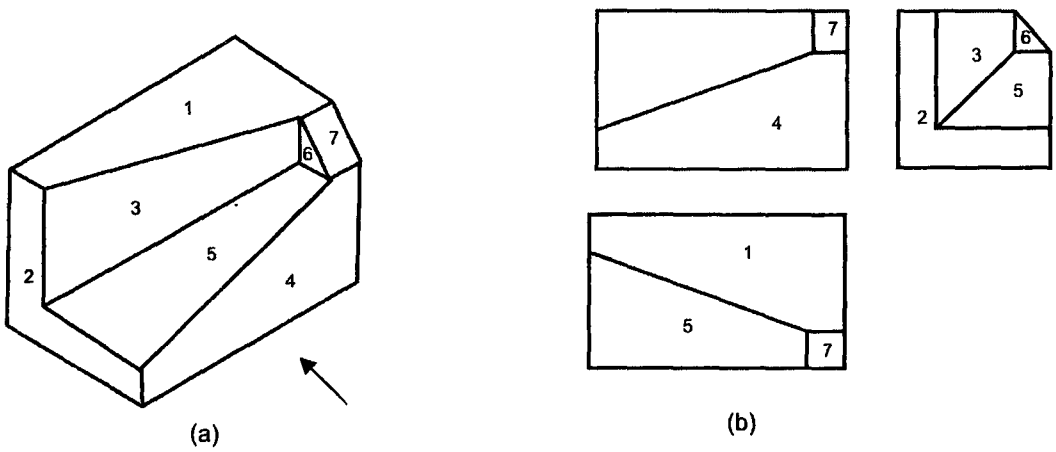

Fig. 6.66

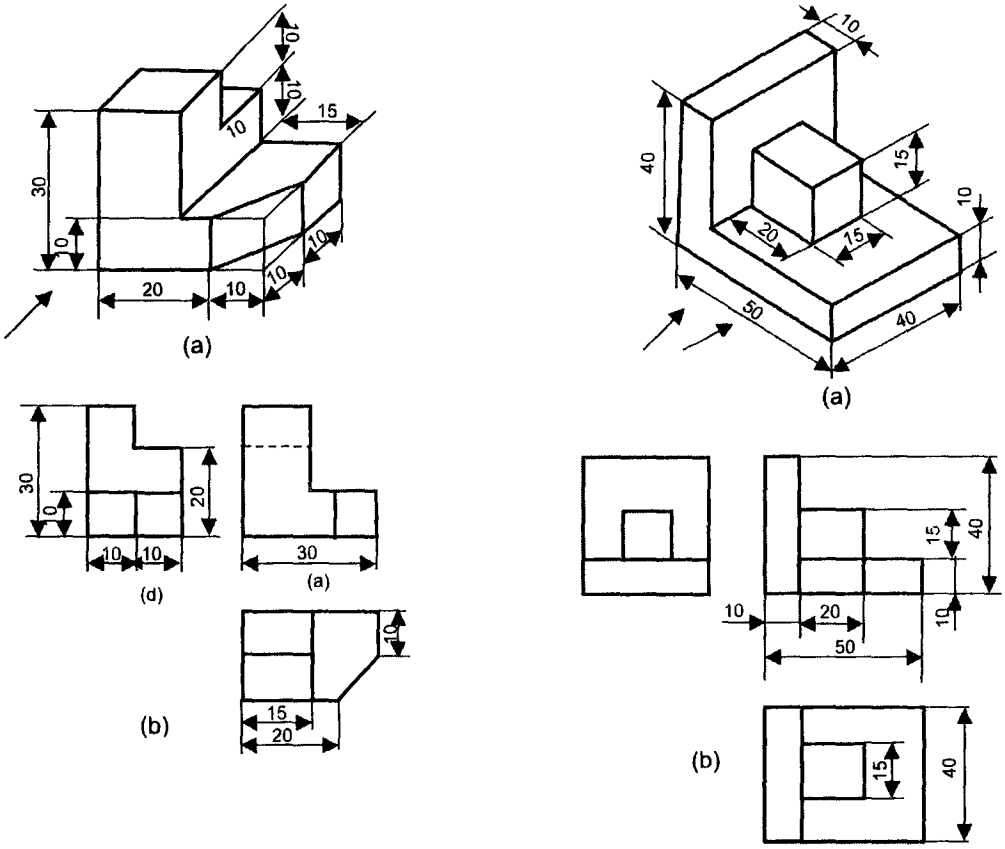

Fig. 6.67 & 6.68

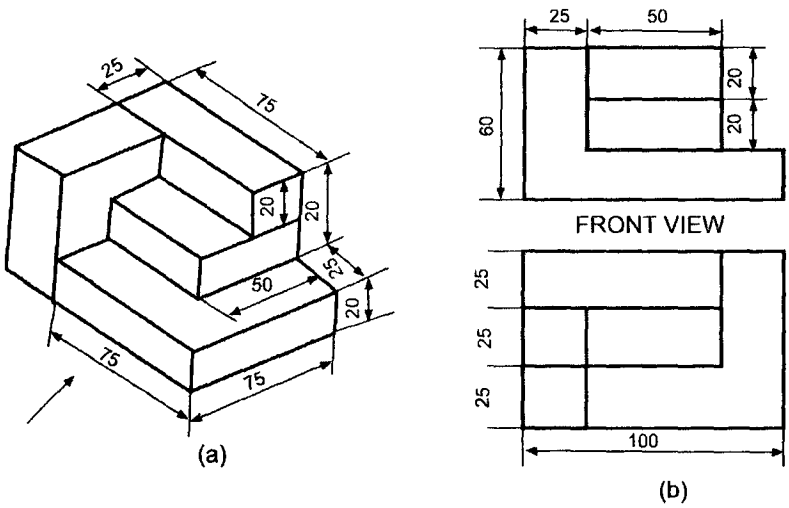

Fig. 6.69

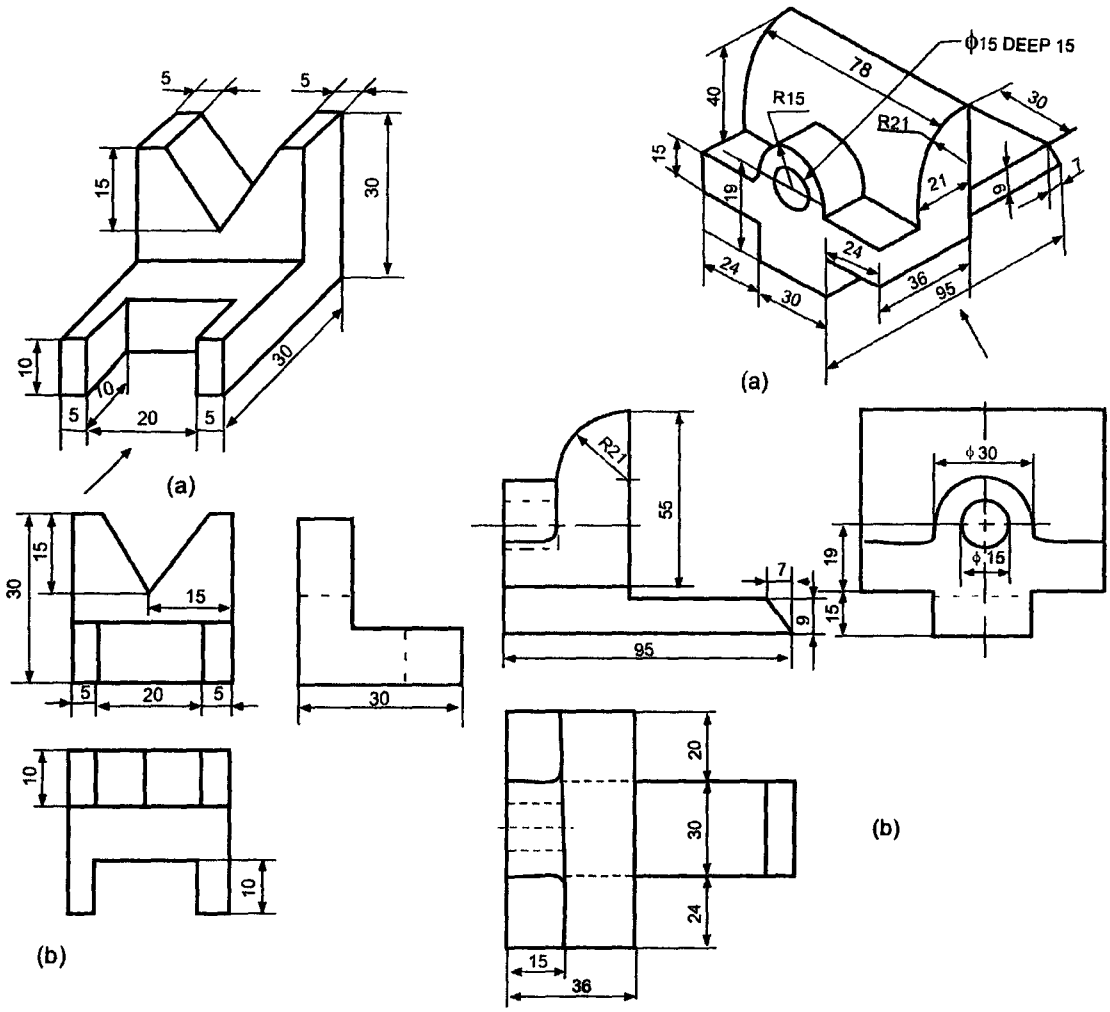
5
5
15
30
10
10
5
20
5
30
(a)
30
15
15
5
20
5
30
10
10
(b)
ϕ15 DEEP 15
78
40
R15
R21
30
15
19
21
9
7
24
24
30
36
95
(a)
R21
55
7
19
9
15
95
ϕ30
ϕ15
20
30
24
15
36
(b)

Fig. 6.70 & 6.71

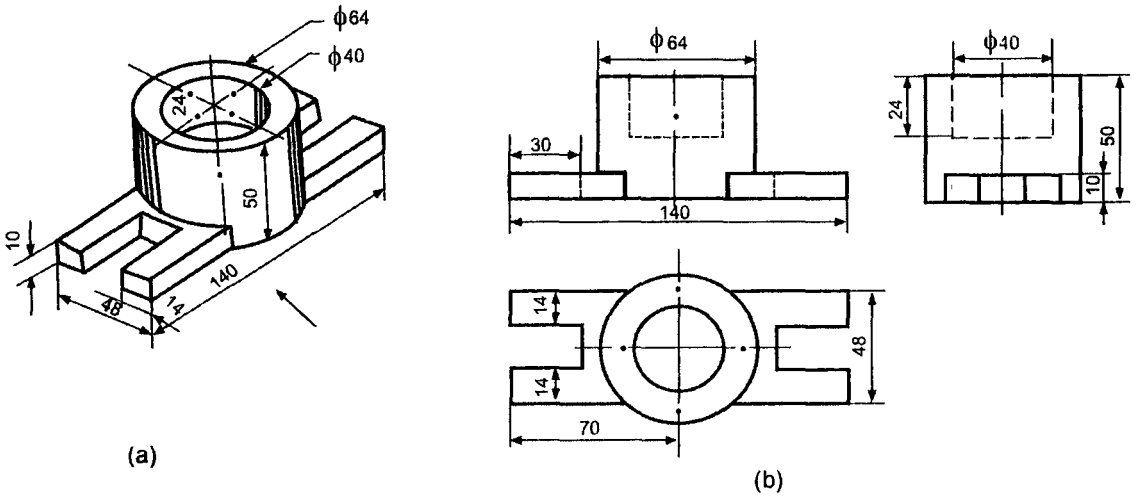

Fig. 6.72

Example 2

Figures 6.73 and 6.76 show the isometric views of cerstain objects A to H along with their orthographic views. Identify the front, top or side views of the objects and draw the third view.

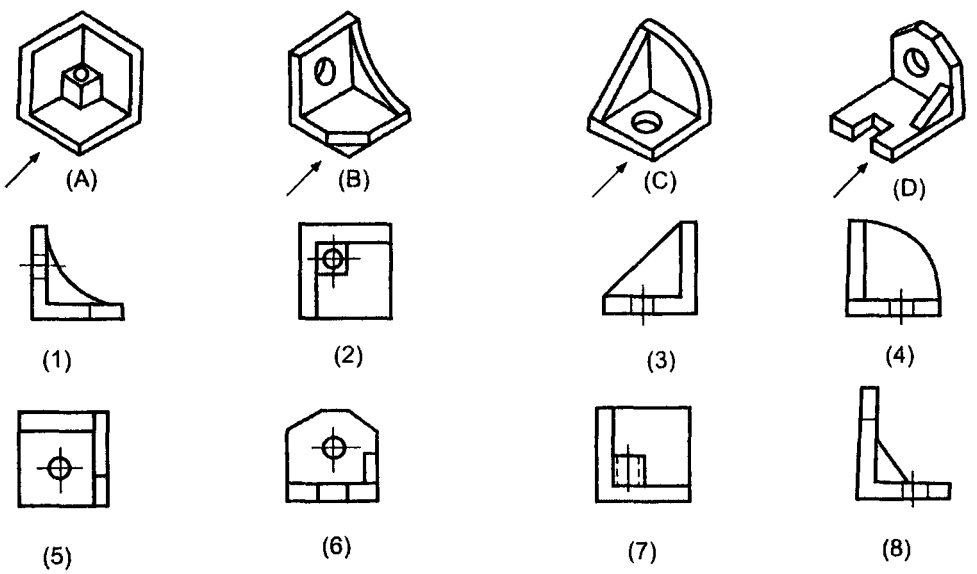

Fig. 6.73

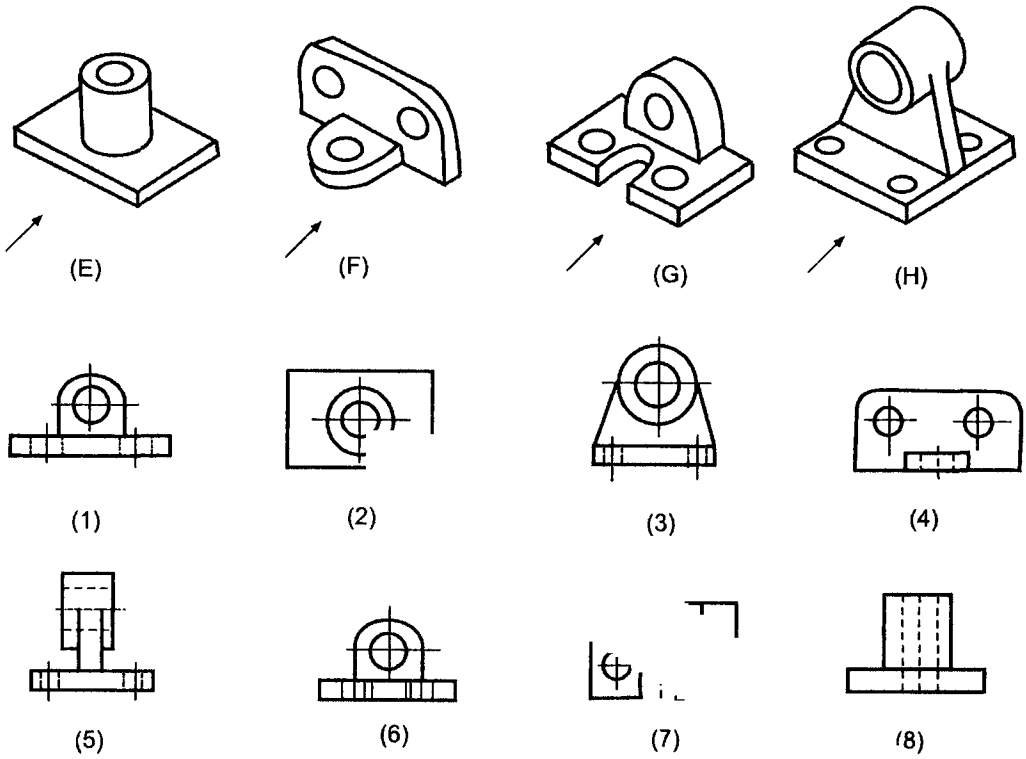

Fig. 6.74

Exercise 2

Study the isometric views in Figures 6.75 and identify the surfaces and number them looking in the direction of the arrows.

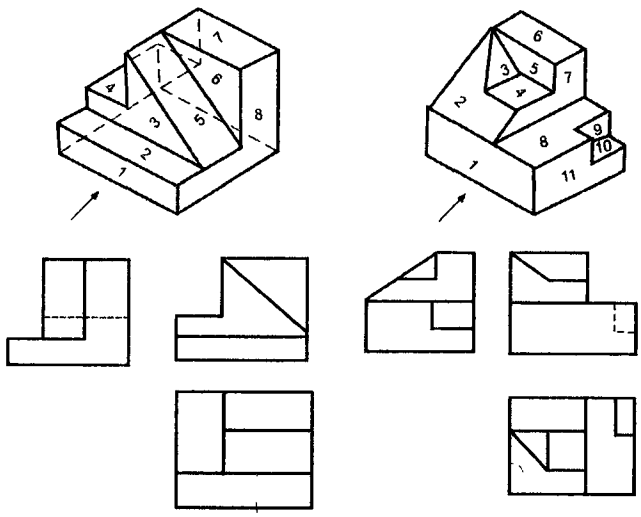

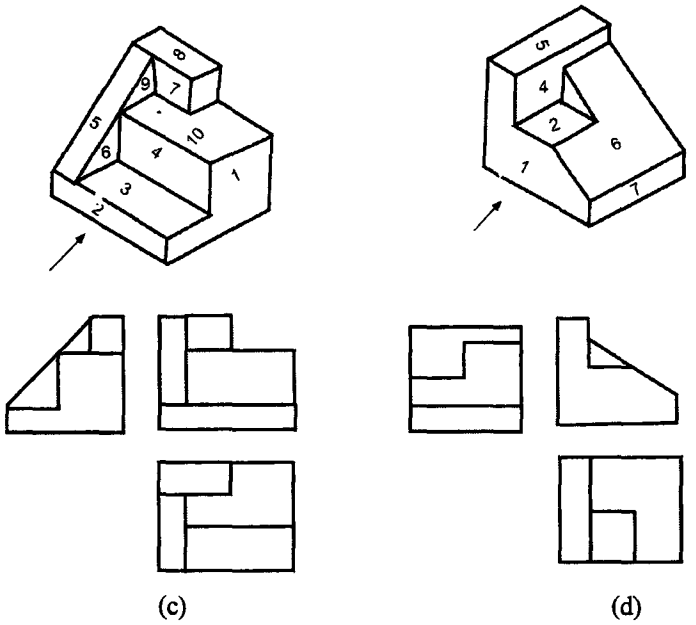

Fig. 6.75

Exercise 3

Study the isometric views in Figures 6.76 and draw the orthographic views looking in the direction of the arrows and number the surfaces.

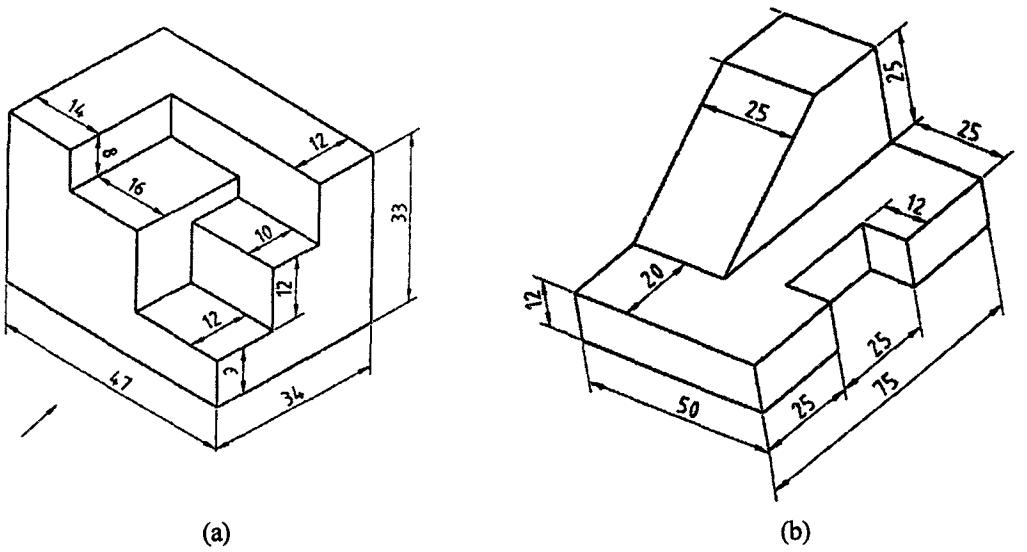

Fig. 6.76(a) &(b)

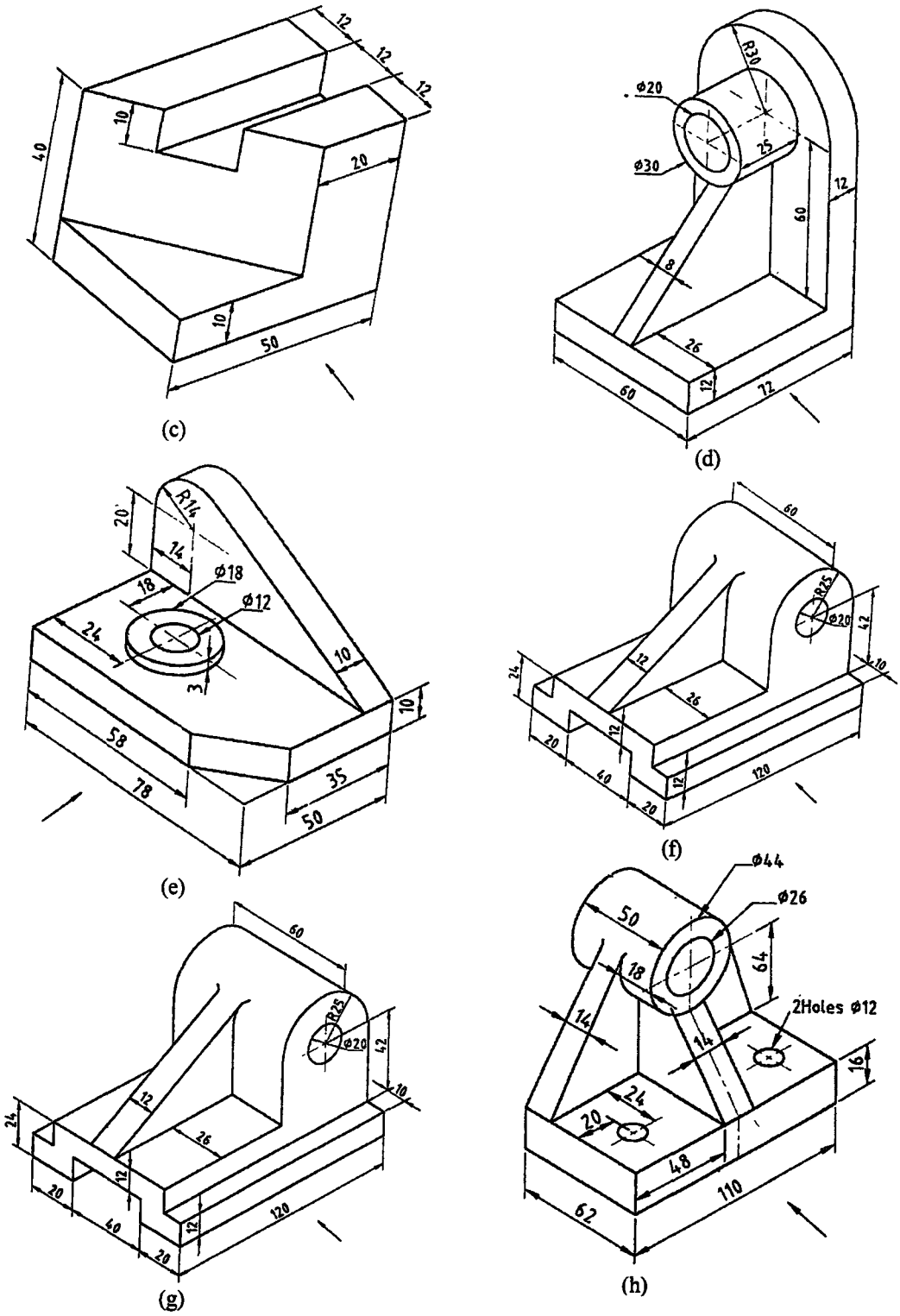
12
12
12
40
10
20
10
50
(c)
R30
Ø20
Ø30
25
12
60
8
26
12
60
72
(d)
20
R14
14
18
Ø18
Ø12
24
3
10
10
58
78
35
50
(e)
60
R25
Ø20
42
10
24
12
26
12
20
40
20
12
120
(f)
60
R25
Ø20
42
10
24
12
26
12
20
40
20
12
120
(g)
Ø44
Ø26
50
64
18
2Holes Ø12
14
14
16
24
20
48
110
62
(h)

Fig. 6.76(e)(f)(g)&(b)

6.10 Auxiliary Projections

The conventional orthographic views, viz, front, top and side views may not be sufficient always to provide complete information regarding the size and true shape of the object, especially when it contains surfaces inclined to the principal planes of projections. The true shape of an inclined surface can only be obtained by projecting it on to an imaginary plane which is parallel to it. This imaginary plane is called an auxiliary plane and the view obtained on it is called the auxiliary view.

Fig 6.77

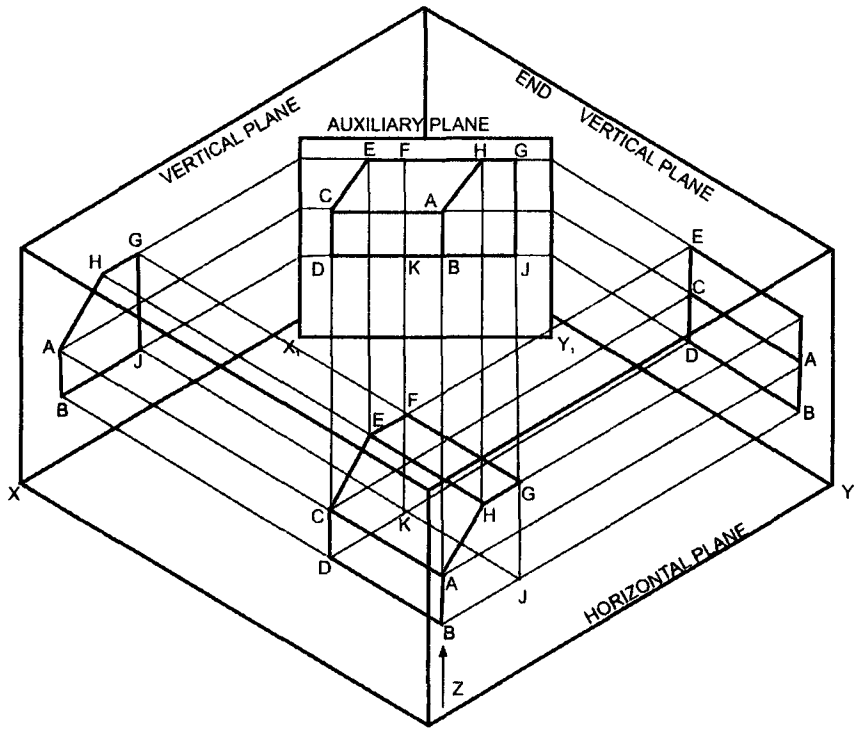

Fig. 6.77

In Fig. 6.77 the auxiliary view required is a view in the direction of the arrow Z. The top view is omitted for clarity. The object is in the first quadrant. The view in the direction of the arrow is obtained by projecting on to a plane at right angles to the arrow Z. This is a Vertical Plane containing the line x_1-y_1. The corners are projected on to the Auxiliary Vertical Plane (AVP) to obtain the auxiliary view as shown. Since the auxiliary plane is vertical, the edges AB, CD, GJ and FK are vertical and will be of true lengths on the auxiliary view. All other lengths are inclined to the auxiliary plane. The auxiliary view thus obtained will not be of much use to see the true shape of the inclined plane.

The advantage of auxiliary projections to see the true shape of the inclined surfaces is illustrated in Fig. 6.78(a).

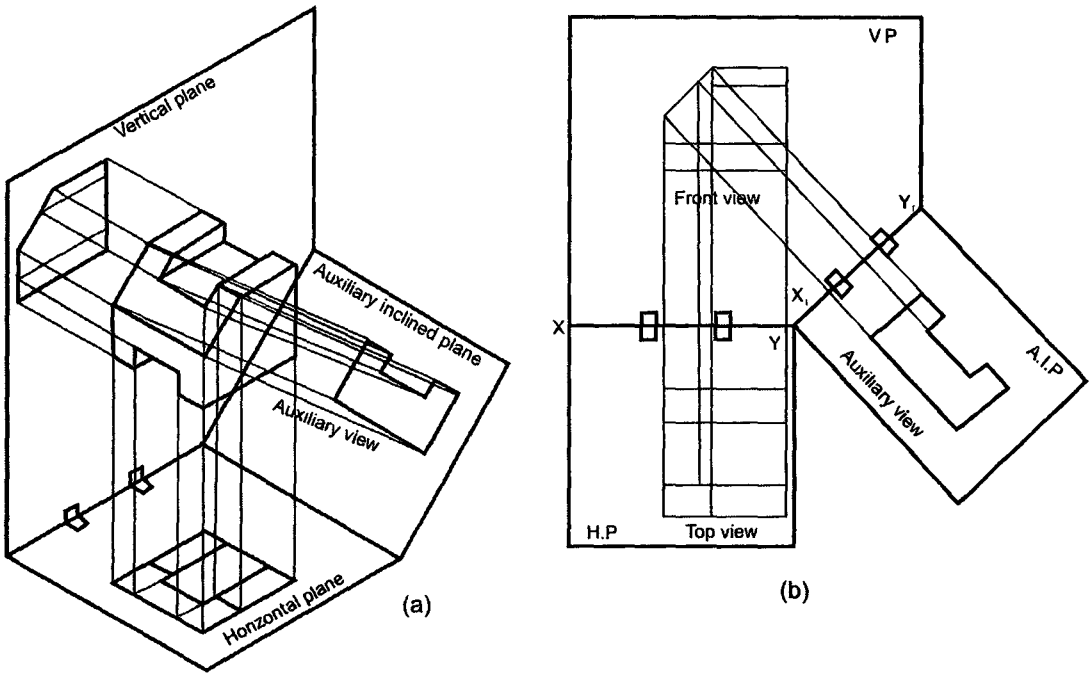

Fig. 6.78

As the auxiliary view only shows the true shape and details of the inclined surface or feature, a partial auxiliary view pertaining to the inclined surface only is drawn. Drawing all other features lead to confusion of the shape discription.

6.10 Types of Auxiliary Views

Auxiliary views may be classified, based on the relation of the inclined surface of the object with respect to the principal planes of projections.

Auxiliary Front View

Figure 6.79 Shows the auxiliary front view of a cube, projected on an Auxiliary Vertical Plane (AVP), inclined to VP and perpendicular to HP. Here, the auxiliary front view is projected from the top view, and its height is same as the height of the front view.

Auxiliary Top View

Figure 6.80 shows the auxiliary top view of a cube, projected on an auxiliary vertical plane inclined to VP and perpendicular to H.P. The diagonal of the cube is vertical and its front view is given. The auxiliary top view is projected from the front view and its depth is the same as the depth of the top view.

Primary and Secondary Auxiliary Views:

The auxiliary view obtained on either AIP or AVP is known as primary auxiliary view. The secondary auxiliary view is required to obtain the true shape of the surface when the surface of an object is inclined to both HP and VP.

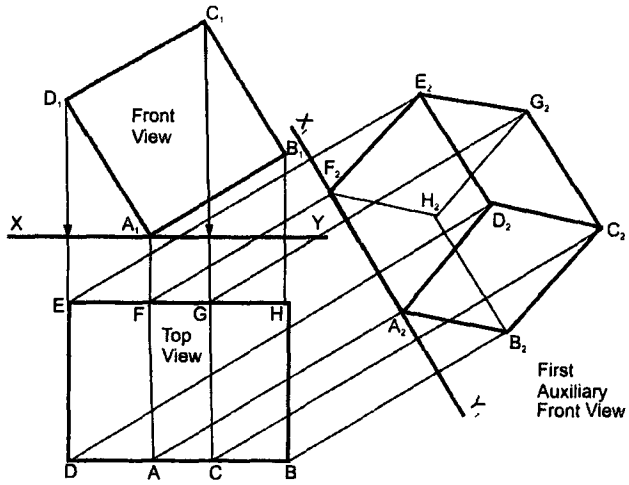

Fig. 6.79 First Auxiliary Front View

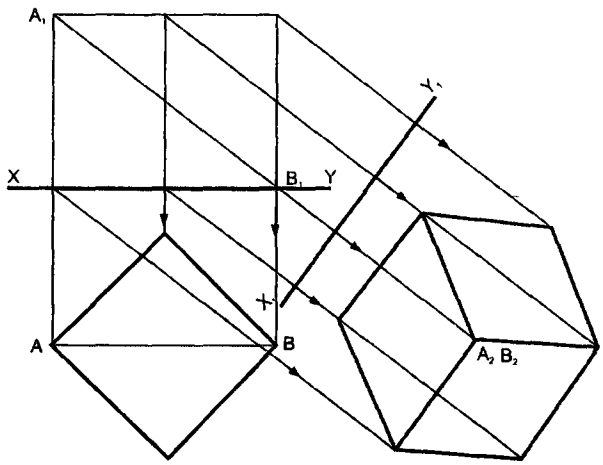

Fig. 6.80 First Auxiliary Top View

Auxiliary Projection of Regular Solids

Projection of planes and of regular solids inclined to one or both the principal planes of projection may be obtained by the use of auxiliary planes. This method is known as the change of reference line method. The advantage of the method may be understood from the examples below.

Problem : A hexagonal prism with a side of base 25mm and axis 60mm long is resting on one of its rectangular faces on H.P. Draw the projections of the prism when it is inclined at 45^0 to V.P.

Construction (Fig. 6.81)

1. Draw the projection of the prism assuming that the axis is perpendicular to VP, with one of its rectangular faces on H.P.

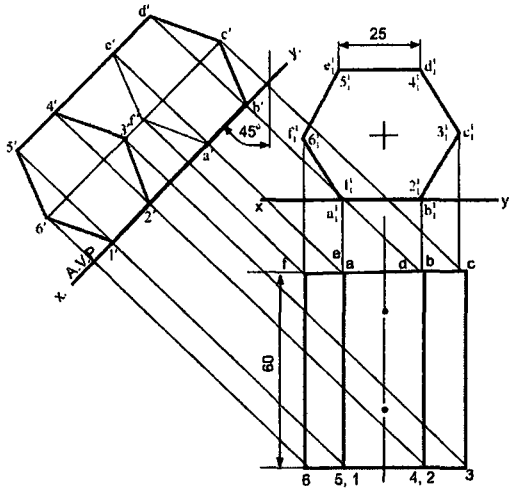

Fig. 6.81

2. Draw the reference line X_1-Y_1 at any Convenient location representing AVP and inclined at 45^0 to the axis of the initial top view.
3. Draw projectors perpendicular to X_1, Y_1, from all the corners in the top view.
4. Measure the distances of the corners in the front view from XY, corresponding to the above corners and mark from X_1,Y_1, along the above projectors.
5. Join the points in the order and complete the auxiliary front view.

The auxiliary view and the initial top view are the final views of the prism.

Problem : *A pentagonal pyramid with side of base 25mm and axis 50mm long, is resting on one of its slant faces on HP, such that its axis is parallel to VP. Draw the projections*

Construction (Fig. 6.82)

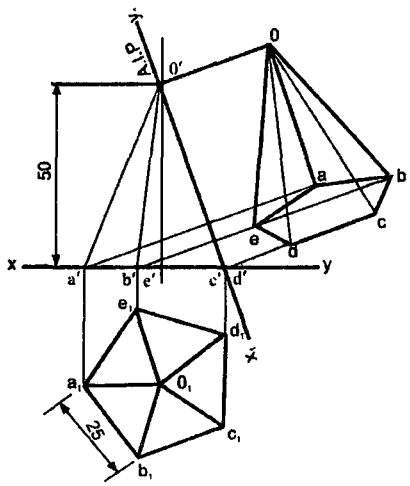

Fig. 6.82

1. Assuming that the axis is perpendicular to HP draw the projections, keeping an edge of the base perpendicular to xy, in the top view.
2. Draw the reference line x_1,y_1 (AIP), passing through the line in the front view, representing the slant face.
3. Repeat the steps 4 and 5 in Fig 6.81 and complete the auxiliary view as shown.

Problem : *Figure 6.83 shows the two views of a truncated octagonal pyramid. Obtain the true shape of the truncated surface of the solid by auxiliary projection.*

Construction (Fig 6.83)

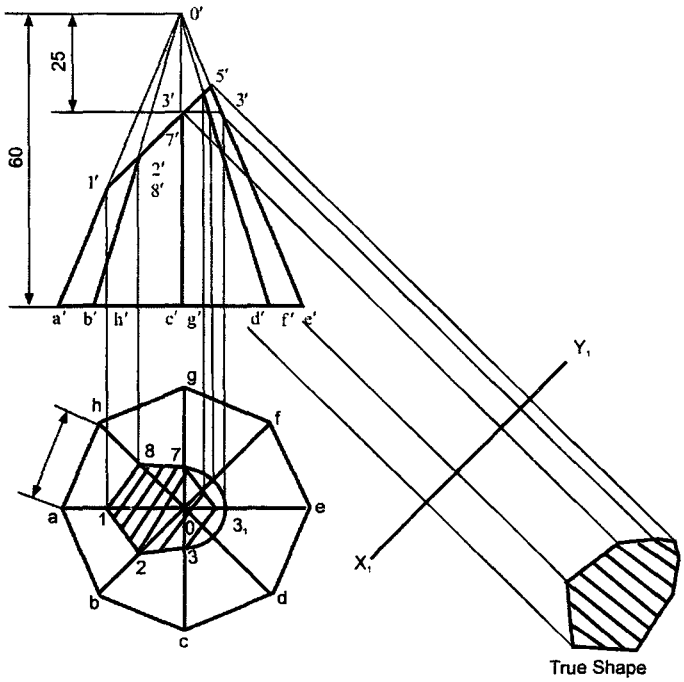

Fig. 6.83

EXERCISES

1. A cube of side 40mm rests on its base in HP. It is then rotated such that one of its vertical faces makes an angle of 30^0 to VP. Draw the projection of the cube.
2. A pentagonal prism with side of base 25mm and axis 50mm long is lying on HP on one of its faces. Draw the projections of the prism, when the axis is parallel to VP.
3. A hexagonal pyramid of side 30mm and height 60mm is resting with its base on HP. One of the base edges is inclined at 60^0 to VP. Draw its projections.
4. A regular pentagonal prism of side 30mm and height 60mm is resting on a corner such that one of its rectangular faces incline at 45^0 to the VP and perpendicular to HP. Draw its projection.

5. Draw the projection of cylinder with diameter of the base 40mm and axis 70mm long with its axis perpendicular to VP and 35mm above HP; one and being 10mm away from VP.
6. A pentagonal pyramid of base 30mm and axis 60mm long has its apex in the VP and the axis in perpendicular to VP. A corner of the base is resting on the ground and the sode of the base contained by the corner is inclined at 30^0 to the ground. Draw its projections.
7. Draw the projections of hexagonal pyramid of base 25mm and height 60mm when one of its triangular faces lies on HP, and its base edge is at right angle to the VP and the axis of the pyramid is parallel to VP.
8. One of the body diagonals of a cube of 40mm edge is parallel to HP and inclined at 60^0 to VP. Draw the projections of the cube.
9. Draw the projection of cylinder of 30mm diameter and 50mm long, lying on the ground with its axis inclined at 45^0 to the VP and parallel to the ground.
10. A cylinder of diameter 40mm and axis 80mm long is standing with its axis inclined at 30^0 to HP. Draw the projection.
11. Draw the projection of a right circular cone of 30mm diameter and 50mm height when a generator lines on HP making an angle of 30^0 with VP.
12. One of the body diagonals of a cube of 40mm edge is parallel to HP and inclined at 60^0 to VP. Draw the projections of the cube.

CHAPTER 7

Devlopment of Surfaces

7.1 Introduction

A layout of the complete surface of a three dimentional object on a plane is called the development of the surface or flat pattern of the object. The development of surfaces is very important in the fabrication of articles made of sheet metal.

The objects such as containers, boxes, boilers, hoppers, vessels, funnels, trays etc., are made of sheet metal by using the principle of development of surfaces.

In making the development of a surface, an opening of the surface should be determined first. Every line used in making the development must represent the true length of the line (edge) on the object.

The steps to be followed for making objects, using sheet metal are given below:

1. Draw the orthographic views of the object to full size.
2. Draw the development on a sheet of paper.
3. Transfer the development to the sheet metal.
4. Cut the development from the sheet.
5. Form the shape of the object by bending.
6. Join the closing edges.

Note: In actual practice, allowances have to be given for extra material required for joints and bends. These allowances are not cosidered in the topics presented in this chapter.

7.2 Methods of Development

The method to be followed for making the development of a solid depends upon the nature of its lateral surfaces. Based on the classification of solids, the folloiwing are the methods of development.

1. Parallel-line Development

It is used for developing prisms and single curved surfaces like cylinders in which all the edges / generators of lateral surfaces are parallel to each other.

2. Radial-line Development

It is employed for pyramids and single curved surfaces like cones in which the apex is taken as centre and the slant edge or generator (which are the true lengths)as radius for its development.

7.2.1 Develop[ment of Prism

To draw the development of a square prism of side of base 30mm and height 50mm.

Construction (Fig.7.1)

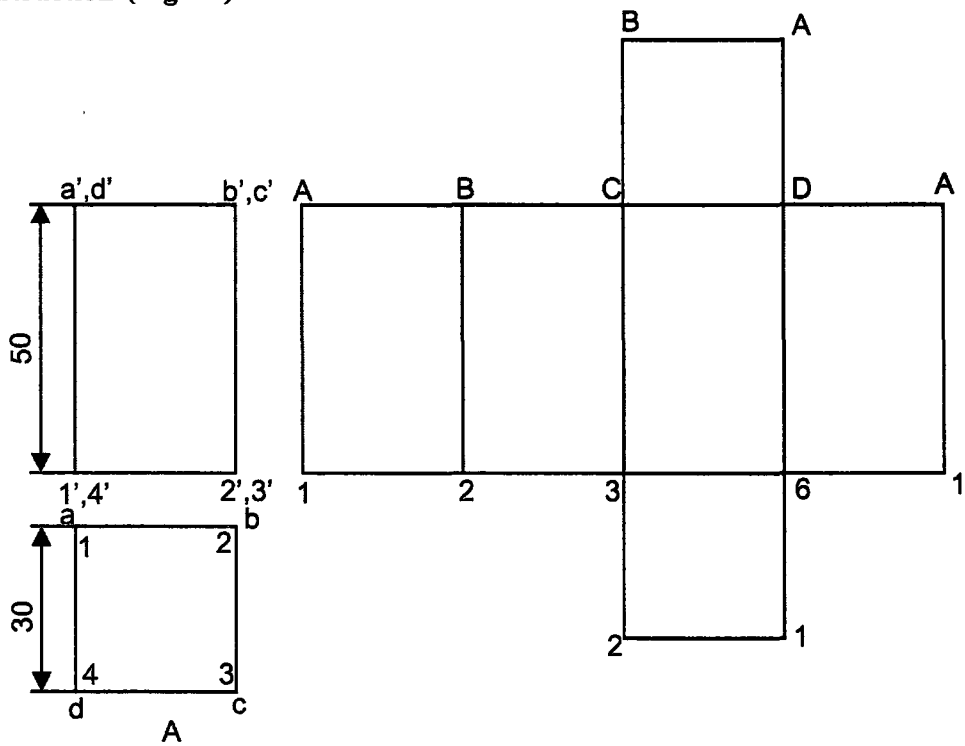

Fig. 7.1

1. Assume the prism is resting on its base on H.P. with an edge of the base pallel to V.P and draw the orthographic views of the square prism.
2. Draw the stretch-out line 1-1 (equal in length to the circumference of the square prism) and mark off the sides of the base along this line in succesion ie 1-2, 2-3, 3-4 and 4-1.
3. Errect perpendiculars through 1,2,3 etc., and mark the edges (folding lines) 1-A, 2-B, etc., equal to the height of the prism 50 mm.
4. Add the bottom and top bases 1234 and ABCD by the side of any of the base edges.

7.2.2 Development of a Cylinder

Construction (Fig.7.2)

Figure shows the development of a cylinder. In this the length of the rectangle representing the develoopmet of the lateral surface of the cylinder is equal to the circumference (πd here d is the diameter of the cylinder) of the circular base.

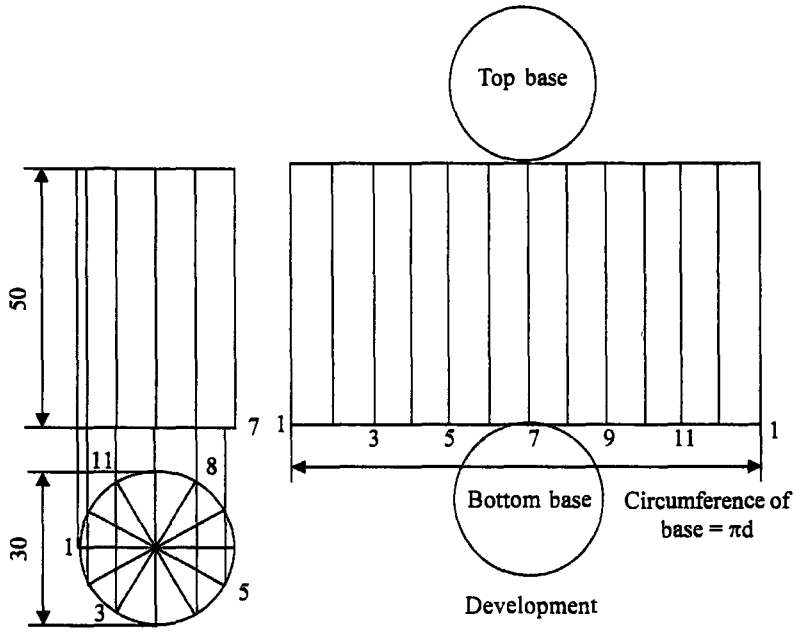

Fig. 7.2 Development of Cylinder

7.2.3 Development of a square pyramid with side of base 30 mm and height 60 mm.

Construction (Fig.7.3)

1. Draw the views of the pyramid assuming that it is resting on H.P and with an edge of the base parallel to V.P.
2. Determine the **true length o-a** of the slant edge.

Note:

In the orientation given for the solid, all the slant edges are inclined to both H.P and V.P. Hence, neither the front view nor the top view provides the true length of the slant edge. To determine the true lehiter of the slant edge, say OA, rotate **oa** till it is parallel to xy to the position.$\mathbf{oa}_1$. Through $\mathbf{a}_1$, draw a projector to meet the line xy at $\mathbf{a}^1_1$. Then $\mathbf{o}^1_1\ \mathbf{a}^1_1$ represents the true length of the slant edge OA. This method of determining the true length is also known as rotation method.

3. with centre **o** and radius $\mathbf{o}^1\mathbf{a}^1$ draw an arc.
4. Starting from A along the arc, mark the edges of the base ie. AB, BC, CD and DA.
5. Join O to A,B,C, etc., representaing the lines of folding and thus completing the development.

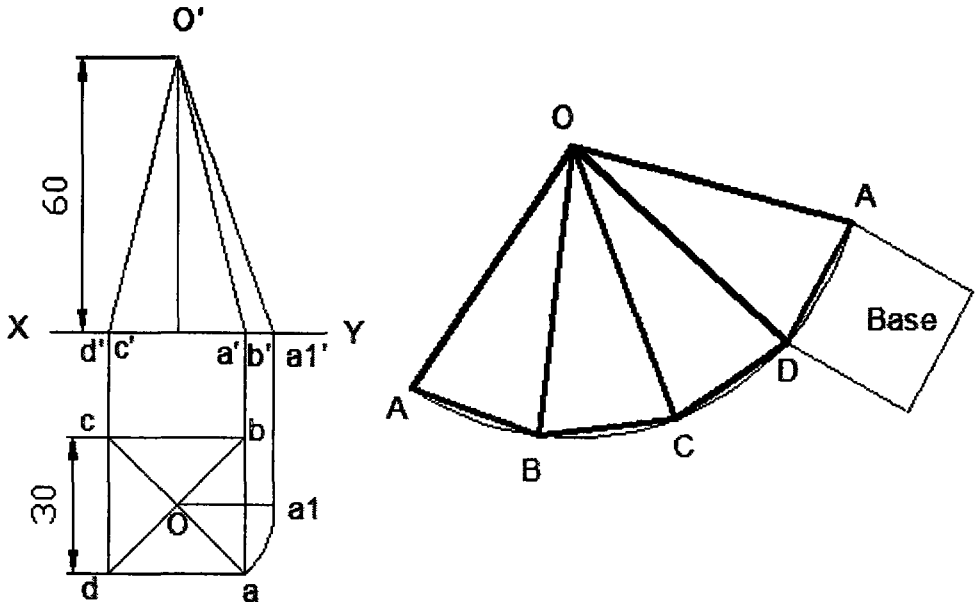

Fig. 7.3 Development of Square Pyramid

Development of Pentagonal Pyramid.

Construction (Fig.7.4)

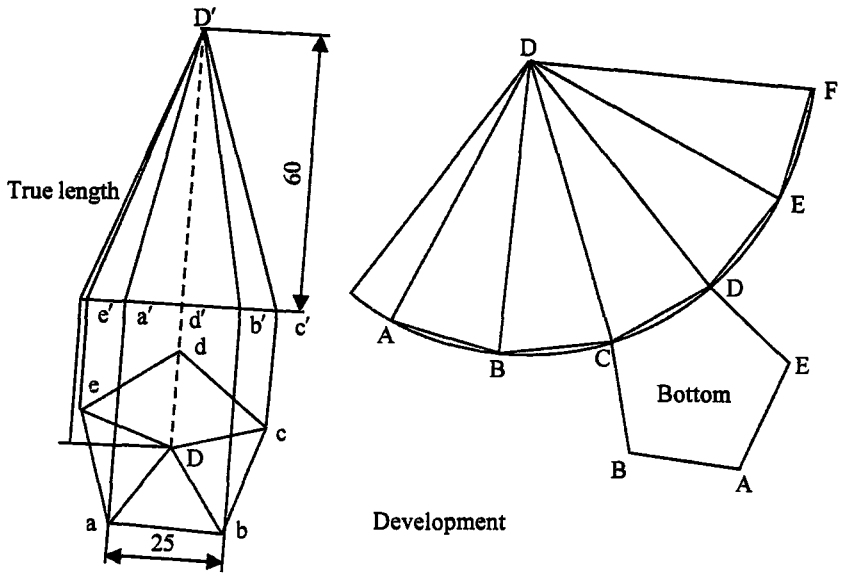

Fig. 7.4 Development of Pentagonal Pyramid

1. Draw the orthgraphic views of the pyramid ABCDE with its base on H.P and axis parallel to V.P.
2. With centre o of the pyramid and radius equal to the true length of the slant edge draw an arc.
3. Mark off the edges starting from A along the arc and join them to o representing the lines of folding.
4. Add the base at a suitable location.

7.2.4 Development of a Cone

Construction (Fig.7.5)

The development of the lateral surface of a cone is a sector of a circle. The radius and length of the arc are equal to the slant height and circumference of the base of the cone respectively. The included angle of the sector is given by $(r / s) \times 360^0$, where **r** is the radius of the base of the cone and s is the true length.

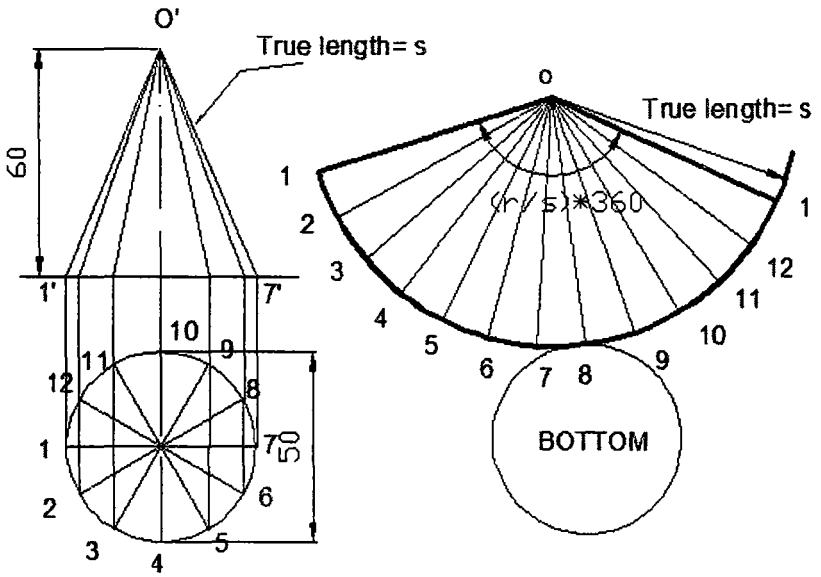

Fig. 7.5 Development of Cone

Problem : A Pentagonal prism of side of base 20 mm and height 50 mm stands vertically on its base with a rectangular face perpendicular to V.P. A cutting plane perpendicalar to V.P and inclined at 60^0 to the axis passes through the edges of the top base of the prism. Develop the lower portion of the lateral surface of the prism.

Construction (Fig.7.6)

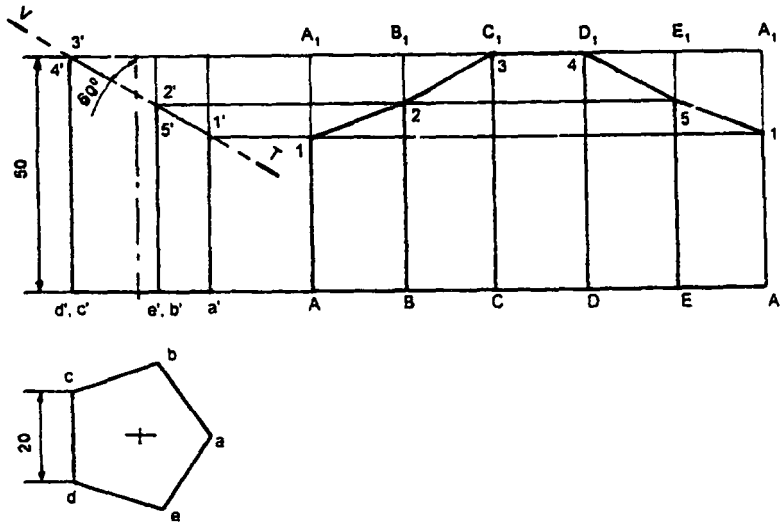

Fig. 7.6 Development of Pentagonal Prism

1. Draw the projections of the prism.
2. Draw the trace (V.T) of the cutting plane intersecting the edges at points 1,2,3, etc.
3. Draw the stretch-out AA and mark-off the sides of the base along this in succession i.e., AB, BC, CD, DE and EA.
4. Errect perpendiculars through A,B,C etc., and mark the edges AA_1, BB_1, equal to the height of the prism.
5. Project the points $1^1,2^1,3^1$ etc., and obtain 1,2,3 etc., respectively on the corresponding edges in the development.
6. Join the points 1,2,3 etc., by straight lines and darken the sides corresponding to the truncated portion of the solid.

Note

1. Generally, the opening is made along the shortest edge to save time and soldering.
2. Stretch-out line is drawn in-line with bottom base of the front view to save time in drawing the development.
3. AA_1-A_1A is the development of the complete prism.
4. Locate the points of intersectiion $1^1,2^1$, etc., between VT and the edges of the prism and draw horizontal lines through them and obtain 1,2, etc., on the corresponding edges in the devolopment
5. Usually, the lateral surfaces of solids are developed and the ends or bases are omitted in the developments. They can be added whenever required easily.

Problem : *A hexagonal prism of side of base 30 mm and axis 70 mm long is resting on its base on H.P. such that a rectangular face is parallel to V.P. It is cut by a section plane perpendicular to V.P and inclined at 30⁰ to H.P. The section plane is passing through the top end of an extreme lateral edge of the prism. Draw the development of the lateral surface of the cut prism.*

Construction (Fig.7.7)

1. Draw the projections of the prism.
2. Draw the section plane VT.
3. Draw the development AA_1-A_1A of the complete prism following the stretch out line principle.
4. Locate the point of intersectiion 1^1, 2^1 etc., between VT and the edges of the prism.
5. Draw horizontal lines thrugh 1^1,2^1 etc., and obtain 1,2, etc., on the corresponding edges in the development.
6. Join the points 1,2, etc., by straight lines and darken the sides corresponding to the retained portion of the solid.

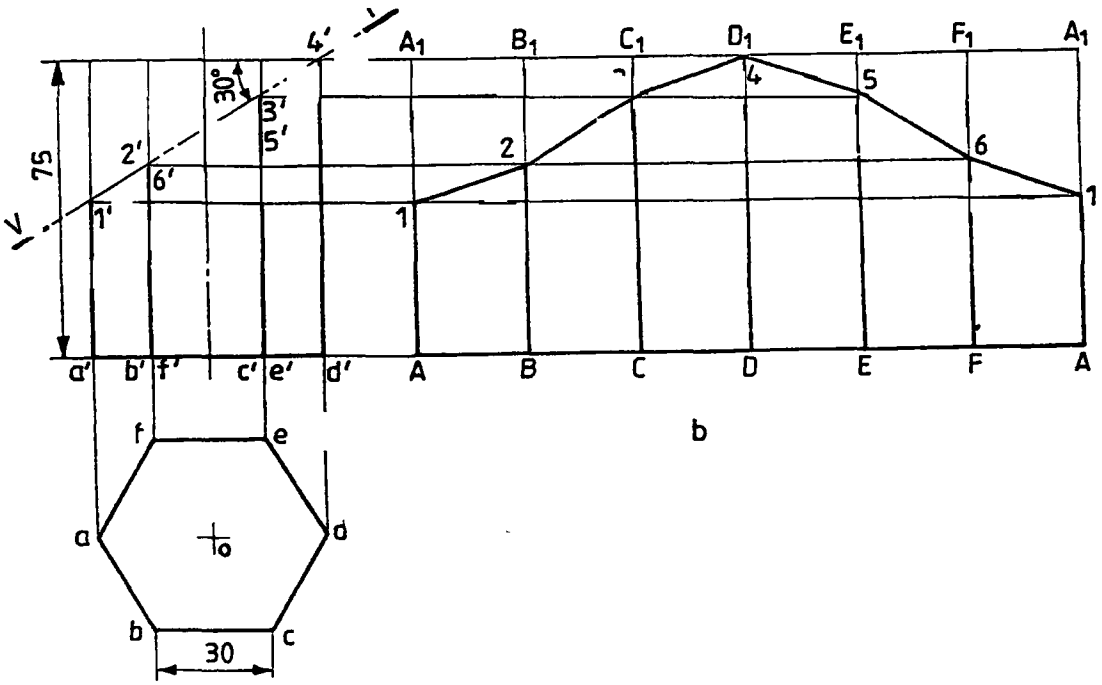

Fig. 7.7 Development of Hexagonal Prism

Problem : *Draw the development of the lateral surface of the frustum of the square pyramid of side of base 30 mm and axis 40 mm, resting on H.P with one of the base edges parallel to V.P. It is cut by a horizontal cutting plane at a height of 20 mm.*

Construction (Fig.7.8)

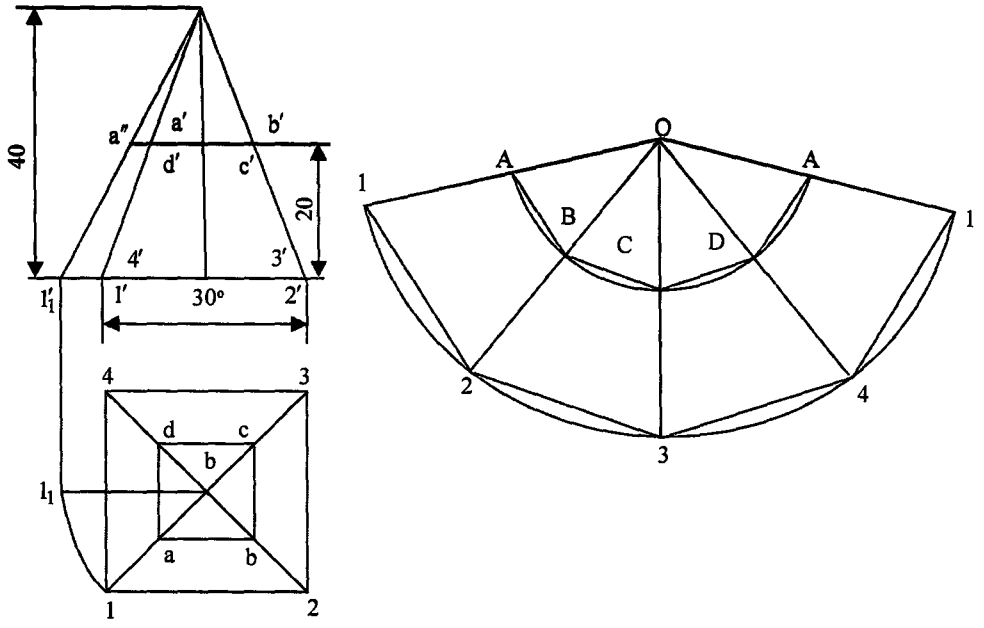

Fig. 7.8 Development of Frustum of Square Pyramid

1. Draw the projections of the square pyramid.
2. Determine the true length. **o-a** of the slant edge.
3. Draw the trace of the cutting plane VT.
4. Locate the points of instersection of the cutting plane on the slant edges a'b'c'd' of the pyramid.
5. With any point **o** as centre and radius equal to the true length of the slant edge draw an arc of the circle.
6. With radius equal to the side of the base 30 mm, step-off divisions on the above arc.
7. Join the above division points 1,2,3 etc., in the order with the centre of the arc **o.** The full development of the pyramid is given by 012341.
8. With centre **o** and radius equal to **oa** mark-off these projections at A, B, C, D, A. Join A-B, B-C etc. ABCDA-12341 is the development of the frustum of the square pyramid.

Problem : *A hexagonal pyramid with side of base 30 mm and height 75 mm stands with its base on H.P and an edge of the base parallel to V.P. It is cut by a plane perpendicular to V.P, inclined at 45⁰ to H.P and passing through the mid-point of the axis. Draw the (sectioned) top view and develop the lateral surface of the truncated pyramid.*

Construction (Fig.7.9)

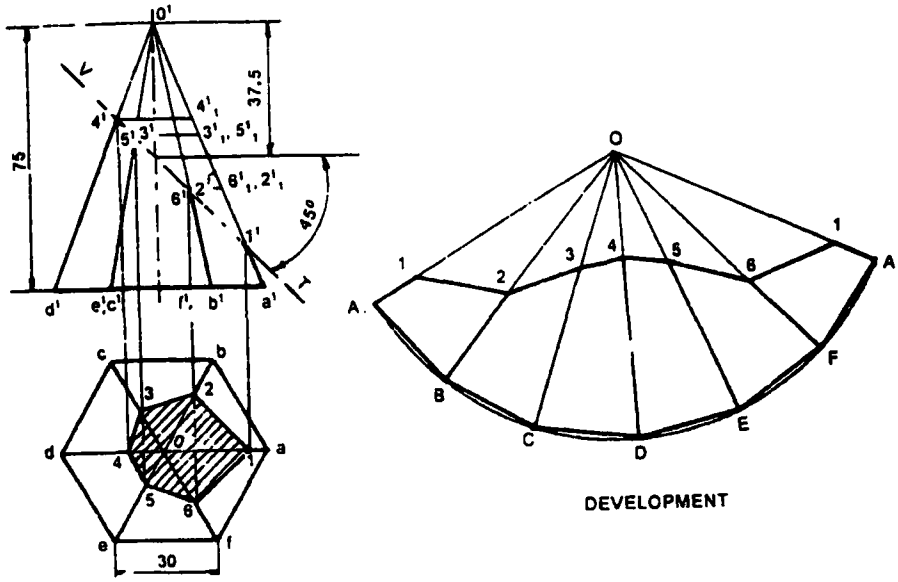

Fig. 7.9 Development of Frustum of Square Pyramid

1. Draw the two views of the given pyramid and indicate the cutting plane.
2. Locate the points of interseciton $1^1,2^1,3^1,4^1,5^1$ and 6^1 between the slant edges and the cutting plane.
3. Obtain the sectional top view by projecting the above points.
4. With **o** as centre and radius equal to the true length of the slant edge draw an arc and complete the total development by following construction of Fig.7.8.
5. Determine the true length $o^12^1_1$, $o^13^1_1$, etc., of the slant edges o^12^1, o^13^1, etc.

Note

(i) To determine the true tength of the edge, say o^12^1, through 2^1 draw a line parallel to the base, meeting the true length line **o-a** at 2^1_1. The length $o^12^1_1$ represents the true length of o^12^1.

(ii) o^11^1 and o^14^1 represent the true lengths as their top views (o1, o4) are parallel to xy.

6. Mark 1,2,3 etc., along OA,OB,OC etc., corresponding to the true lengths o^11^1, o^12^1, o^13^1, etc., in the development.
7. Join 1,2,3 etc., by straight lines and darken the sides corresponding to the truncated portion of the solid.

Problem : *A cylinder of diameter of base 40 mm and height 50 mm is standing on its base on H.P. A cutting plane inclined at 45° to the axis of the cylinder passes through the left extreme point of the top base. Develop the lateral surface of the truncated cylinder.*

Construction (Fig.7.10)

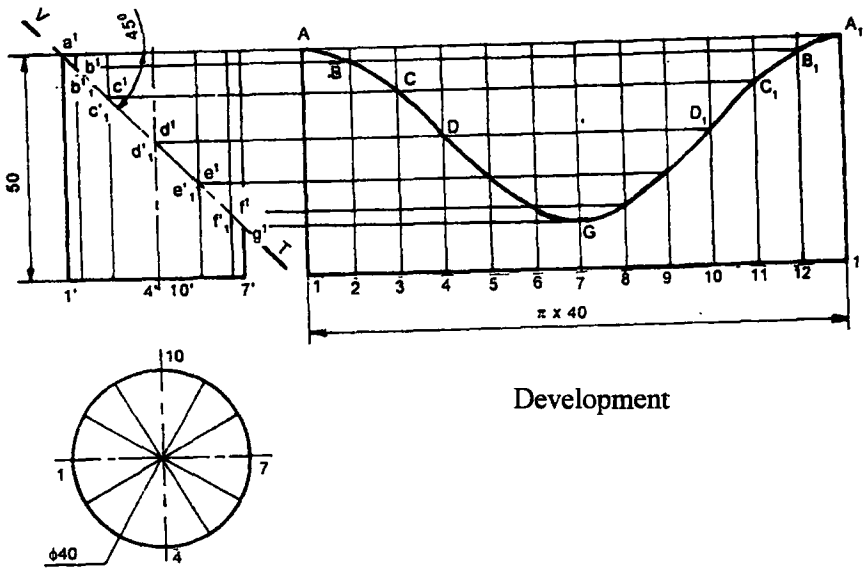

Development

Fig. 7.10

1. Draw the views of the truncated cylinder.
2. Divide the circle (top view) into an equal number of parts.
3. Draw the genertors in the front view corresponding to the above division points.
4. Mark the points of intersection $a^l, b^l, b^l_1, c^l, c^l_1$, etc., between the truncated face and the generators.
5. Draw the stretch-out line of length equal to the circumference of the base circle.
6. Divide the stretch-out line into the same number of equal parts as that of the base circle and draw the generators through those points.
7. Project the points a,b,c, etc., and obtain A,B,C, etc., respectively on the corresponding generators 1,2,3 etc., in the development.
8. Join the points A,B,C etc., by a smooth curve.

Note

(i) The generators should not be drawn thick as they do not represent the folding edges on the surface of the cylinder.

(ii) The figure bounded by 1A-$A_1$1 represents the development of the complete cylinder.

Problem : *A cylinder of base 120 mm and axis 160 mm long is resting on its base on H.P. It has a circular hole of 90 mm diameter, drilled centrally through such that the axis of the hole is perpendicular to V.P and bisects the axis of the cylinder at right angles. Develop the lateral surface of the cylinder.*

Construction (Fig.7.11)

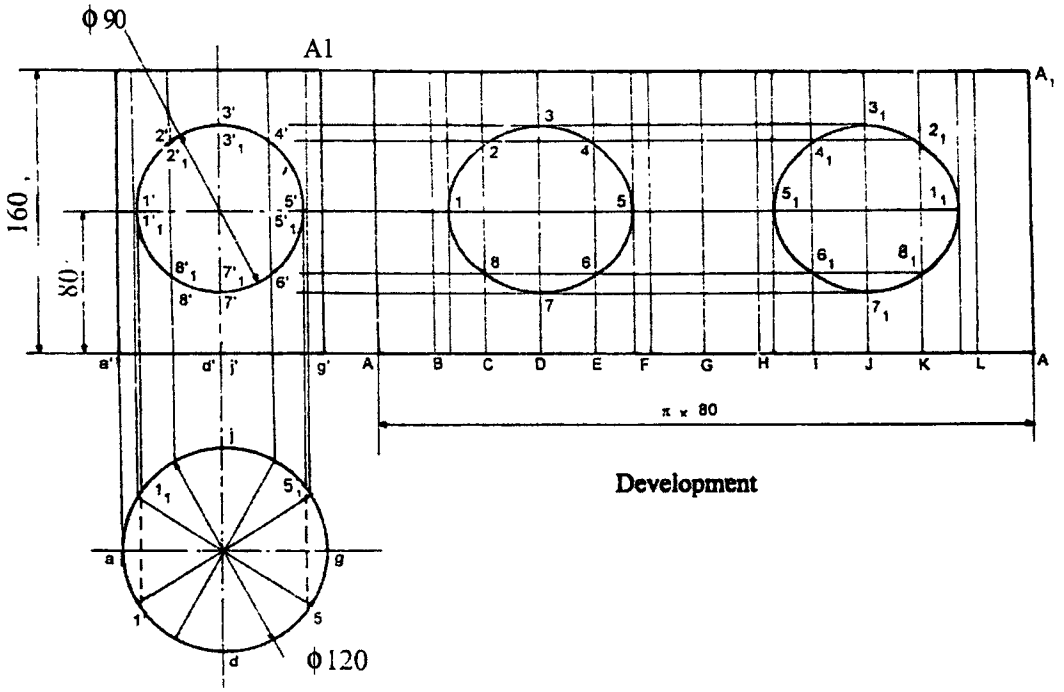

Fig. 7.11

1. Draw the projections of the cylinder with the hole through it.
2. Divide the circle (top view) of the cylinder into 12 equal parts and locate the corresponding generators in the front view.
3. Obtain the complete development AA^1, A^1A of the cylinder and locate the generatros on it.
4. Determine the points of intersection $1^1,2^1$, etc and $1^1_1,2^1_1$, etc. between the hole and the generators in the front view.
5. Transfer these points to the development by projection, including the transition points $1^1(1^1_1)$ and 5^1 (5^1_1).
6. Join the points 1,2 etc., and $1_1,2_1$, etc., by smooth curves and obtain the two openings in the development.

Problem : *A cone of diameter of base 45 mm and height 60 mm is cut by horizontal cutting plane at 20 mm from the apex. Draw the devleopment of the truncated cone.*

Consturction (Fig.7.12)

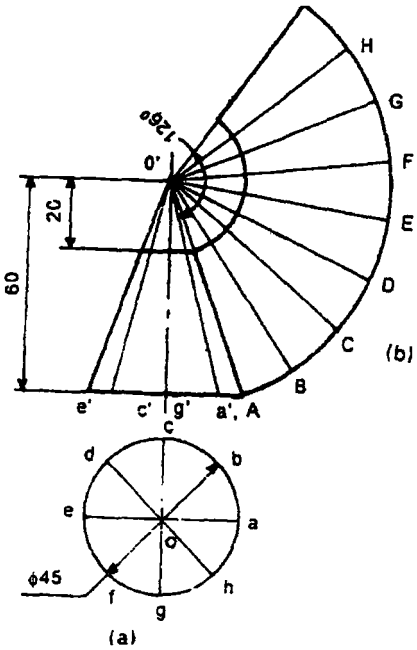

Fig.7.12

1. Draw the two views of the given cone and indicate the cutting plane.
2. Draw the lateral surface of the complete cone by a sector of a circle with radius and arc length equal to the slant hight and circumference of the base respectively. The included anlgle of the sector is given by (360 x r/s), where r is the radius of the base and s is the slant height.
3. Divide the base (top view)into an equal number of parts, say 8.
4. Draw the generators in the front view corresponding to the above division points a,b,c etc.
5. With $o^1 1^1$ as radius draw an arc cutting the generators at 1,2,3 etc.
6. The truncated sector A^1-1^1A gives the development of the truncated cone.

Problem : A cone of base 50mm diameter and height 60mm rests with its base on H.P. and bisects the axis of the cone. Draw the deveopment of the lateral surface of the truncated cone.

Construction (Fig.7.13)

1. Draw the two views of the given cone and indicate the cutting plane.
2. Draw the lateral surface of the complete cone.
3. Divide the base into 8 equal parts.
4. Draw the generators in the front view corresponding to the above divisions.
5. Mark the points of intersection 1,2,3 etc. between the cutting plane and the generators.
6. Trasfer the points 1,2,3 etc. to the development after finding the true distances of 1,2,3 etc from the apex **o** of the cone in the front view.

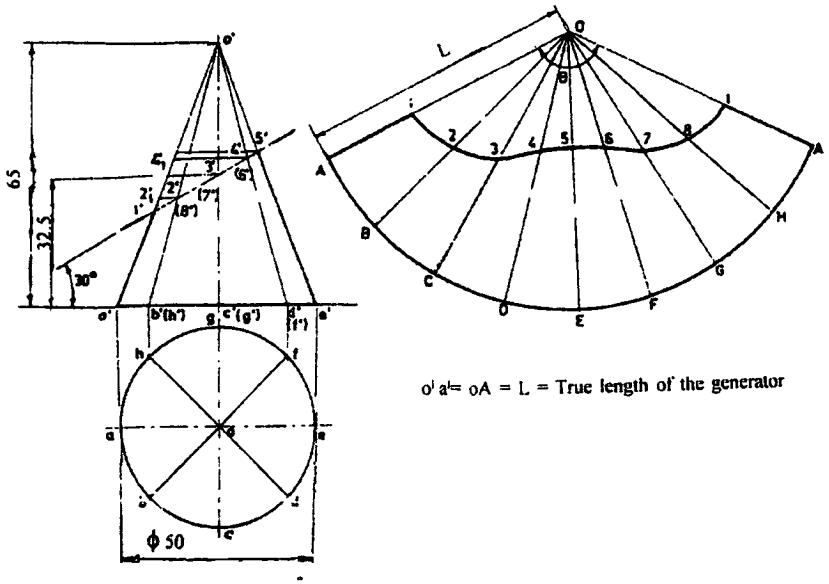

Fig. 7.13

Note : To transfer a point say 4 on **od** to the development.

(i) Determine the true length of **o-4** by drawing a horizontal through 4 meeting **od** at 4.

(ii) On the generator OD, mark the distance **o-4** equal to **o-4**.

Problem : *Figure 7.14a shows a tools tray with an allowance for simple hem and lap-seam. Figure 7.14b represents its development with dimensions.*

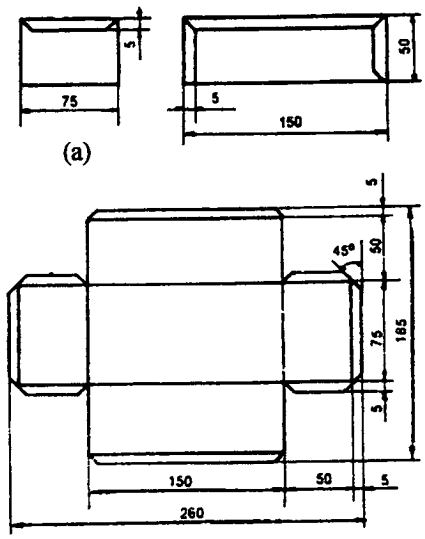

Fig. 7.14

Problem 15 : *Figure 7.15a shows a rectangualr scoop with allowance for lap-seam and Figure 7.15b shows the development of the above with dimensions.*

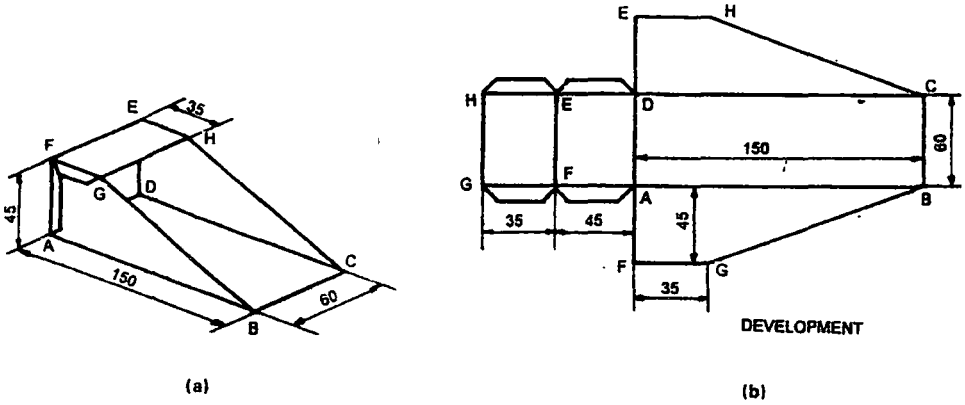

Fig. 7.15 Rectangular Scoop

Problem : *Figure 7.16a shows the pictorial view of a rectangular 90⁰ elbow and Figure 7.16b its development in two parts.*

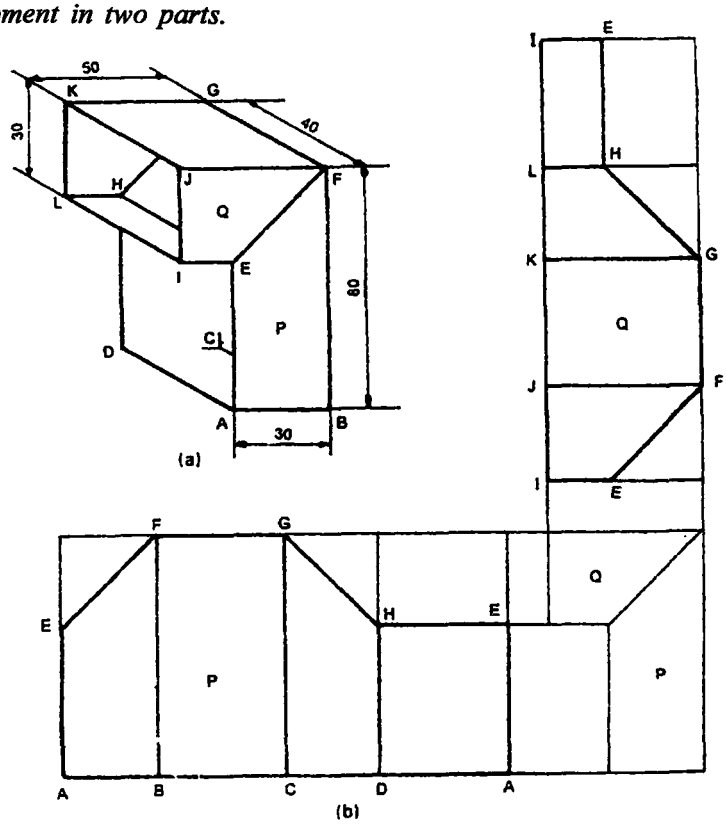

Fig. 7.16 Development of 90⁰ Elbow (Rectangular)

Problem : *Figure 7.17a represents the projection of a round scoop and Figure 7.17b its development.*

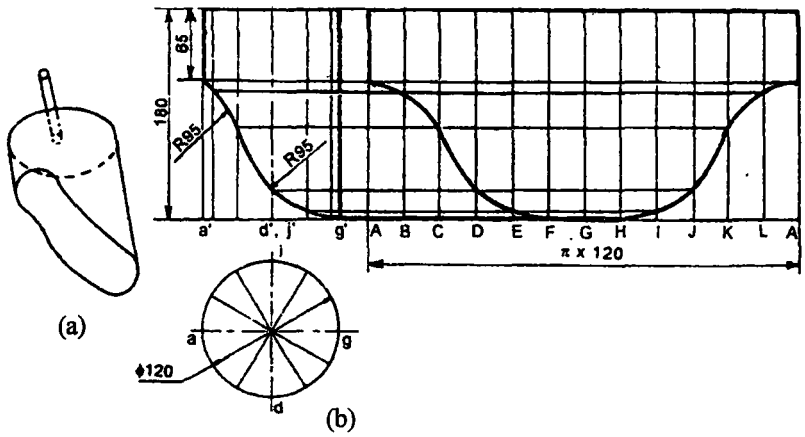

Fig. 7.17 Development of Round Scoop

Problem : *Figure 7.18 shows the projection of a 90o elbow of round section with development shown for one piece.*

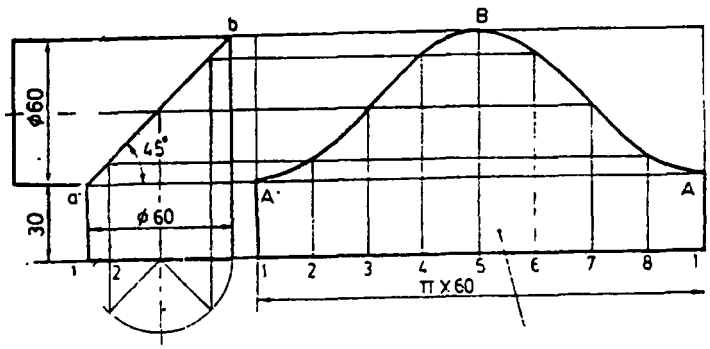

Fig. 7.18 Development of 90° Elbow (Round)

Problem : *Figure 7.19 shows the orthographic projection and the development of parts of funnel.*

Problem 20 : *Figure 7.20 shows the orthographic projection of a chute and the development of the parts.*

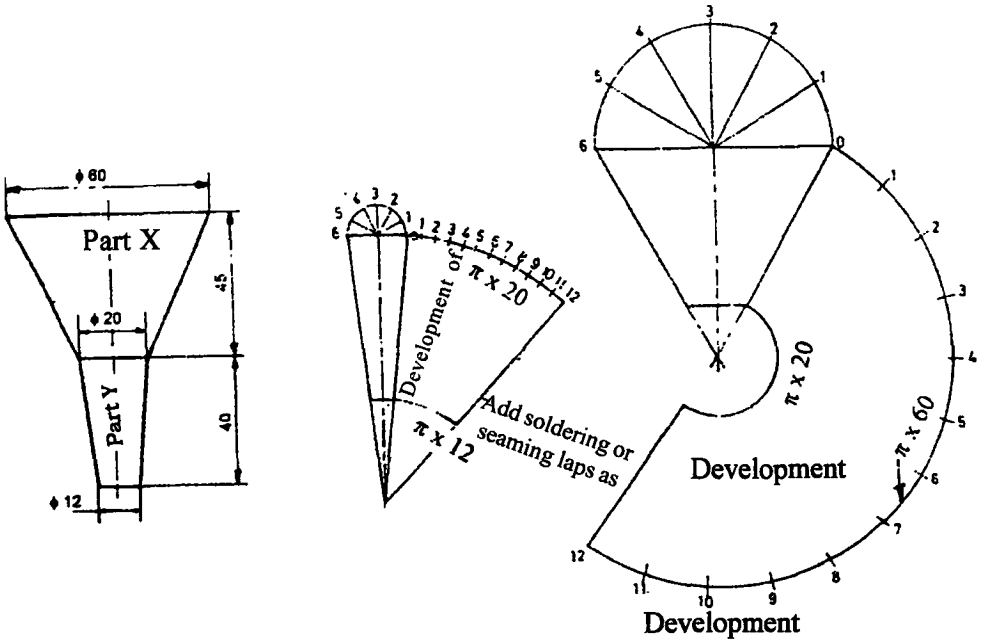

Fig. 7.19 Development of Funnel

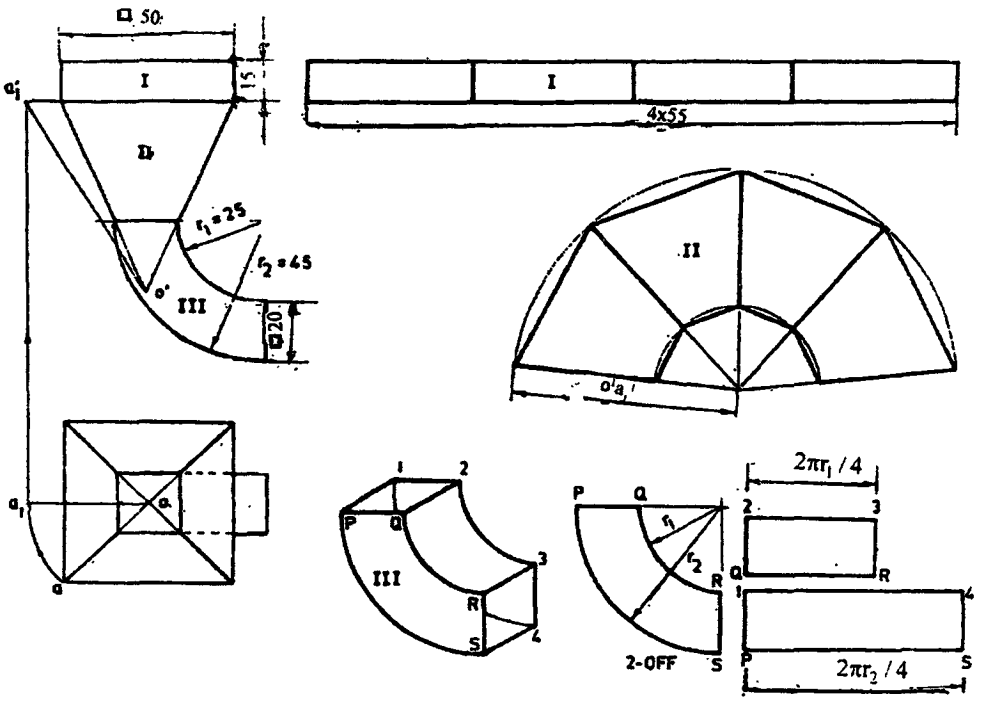

Fig. 7.20 Development of Chute

Problem : *Figure 7.21 shows the orthographic projection of measuring oil can and the development of its parts.*

Problem : *Figure 7.22 shows the development of a three piece pipe elbow.*

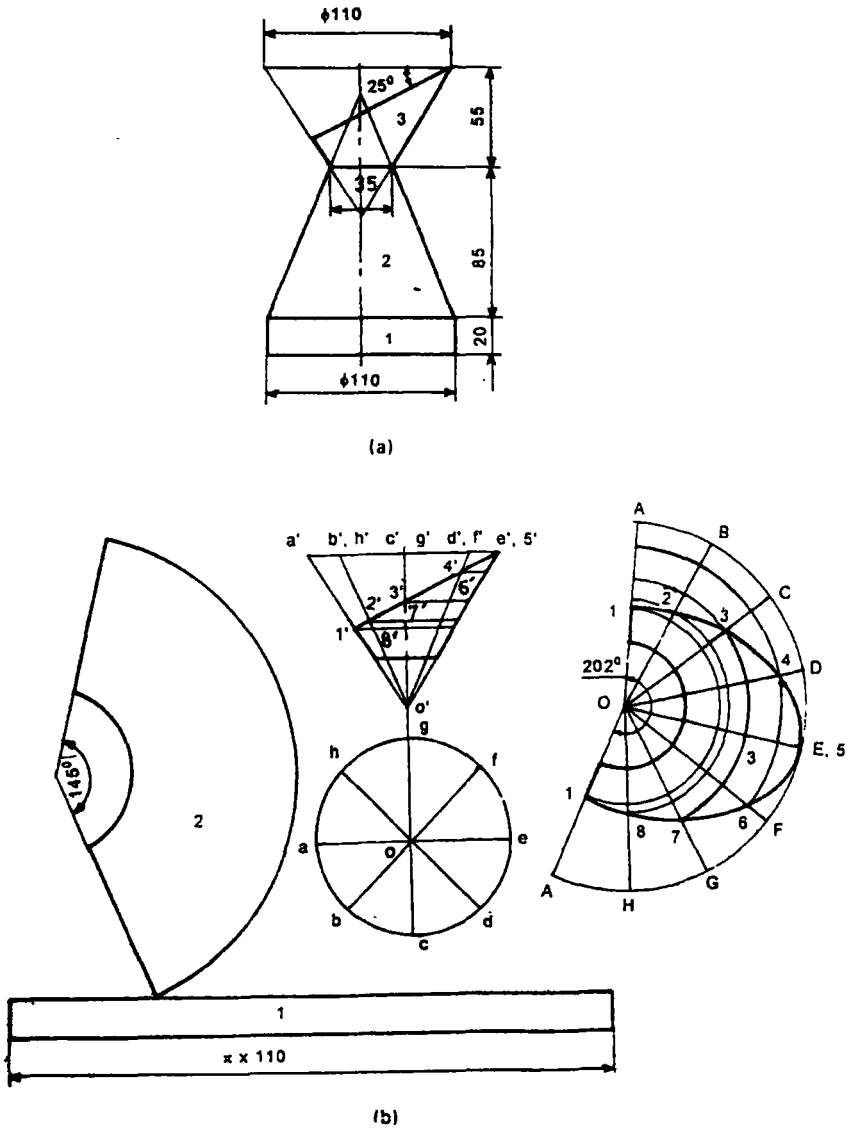

Fig. 7.21 Development of Mesuring Oil Can

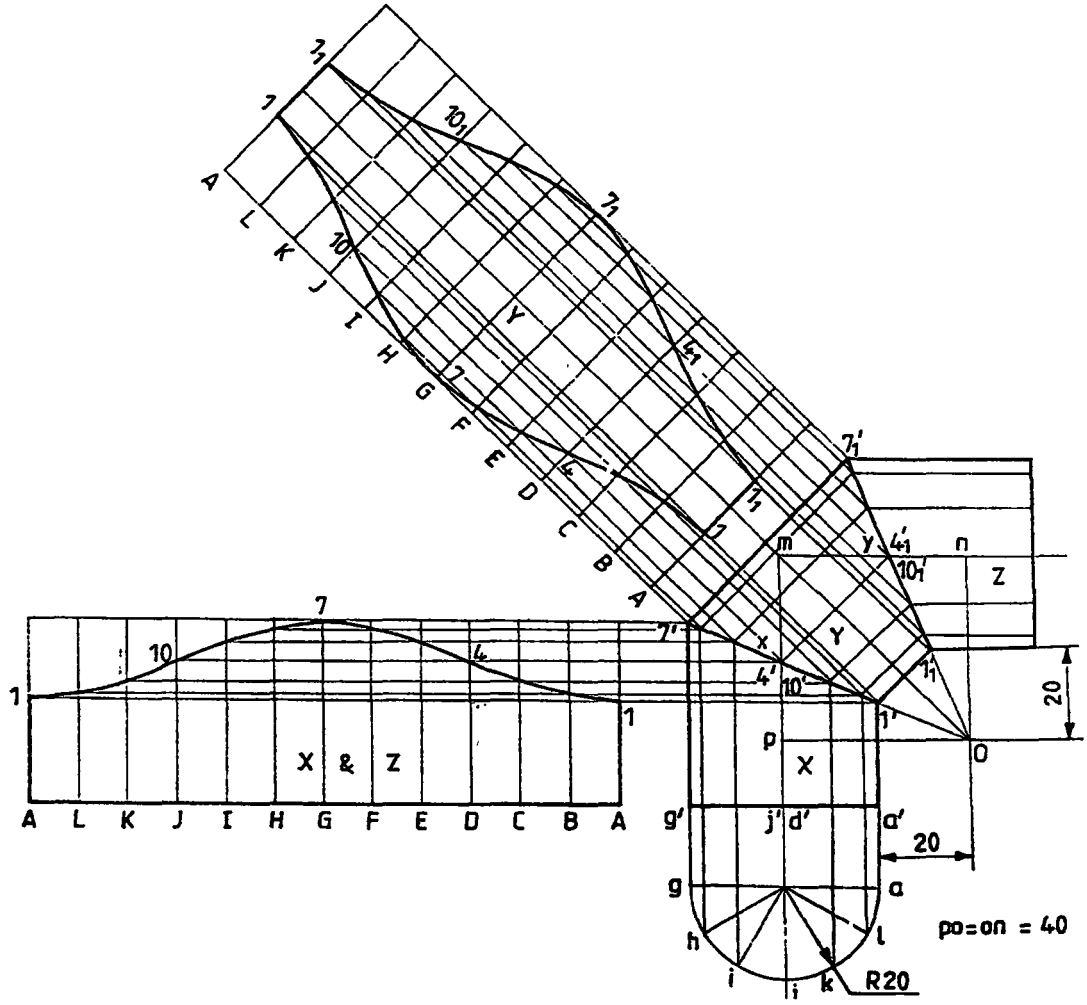

Fig. 7.22 Development of Three Piece Pipe Elbow

Examples

Problem : A hexagonal prism with edge of base 30 mm and height 80 mm rests on its base with one of its base edges perpendicular to V.P. An inclined plane at 45° to H.P. cuts its axis at its middle. Draw the development of the truncated prism.

Solution : (Fig.7.23)

Problem : A pentagonal pyramid, side of base 50 mm and height 80 mm rests on its base on the ground with one of its base sides parallel to V.P. A section plane perpendicular to VP and inclined at 30° to H.P cuts the pyramid, bisecting its axis. Draw the development of the truncated pyramid.

Solution : (Fig.7.24)

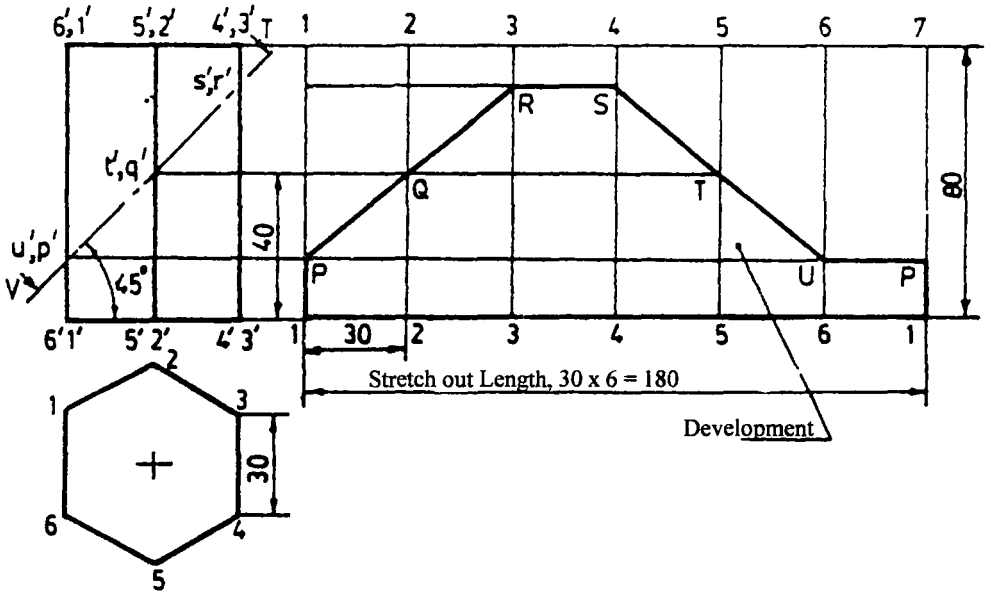

Fig. 7.23 Development of a Right Regular truncated Hexagonal Prism

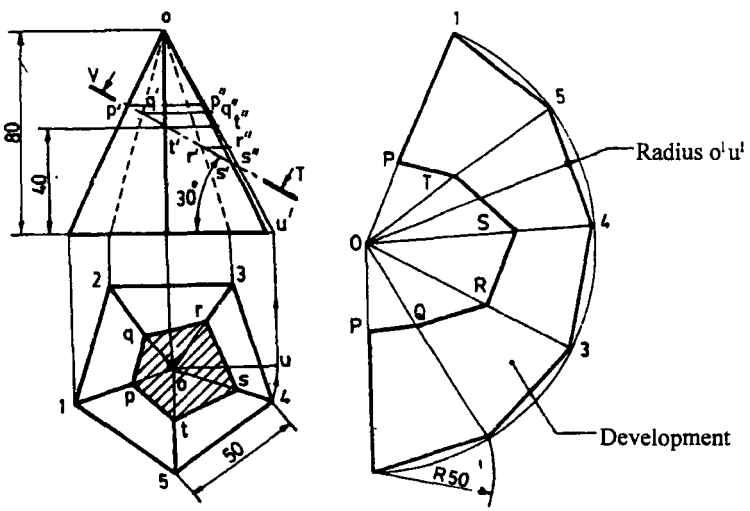

Fig. 7.24 Development of a Right Regular Truncated Pentagonal Pyramid

Problem : *Draw the development of a bucket shown in Fig.7.25a*

Solution : (Fig.7.25b)

Problem : Draw the development of the measuring jar shown in Fig.7.26a.

Solution : (Fig.7.26b)

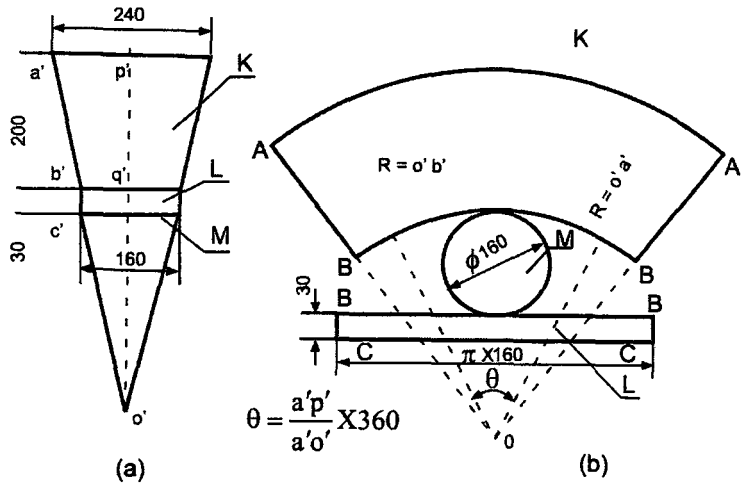

Fig. 7.25 Development of a Bucket

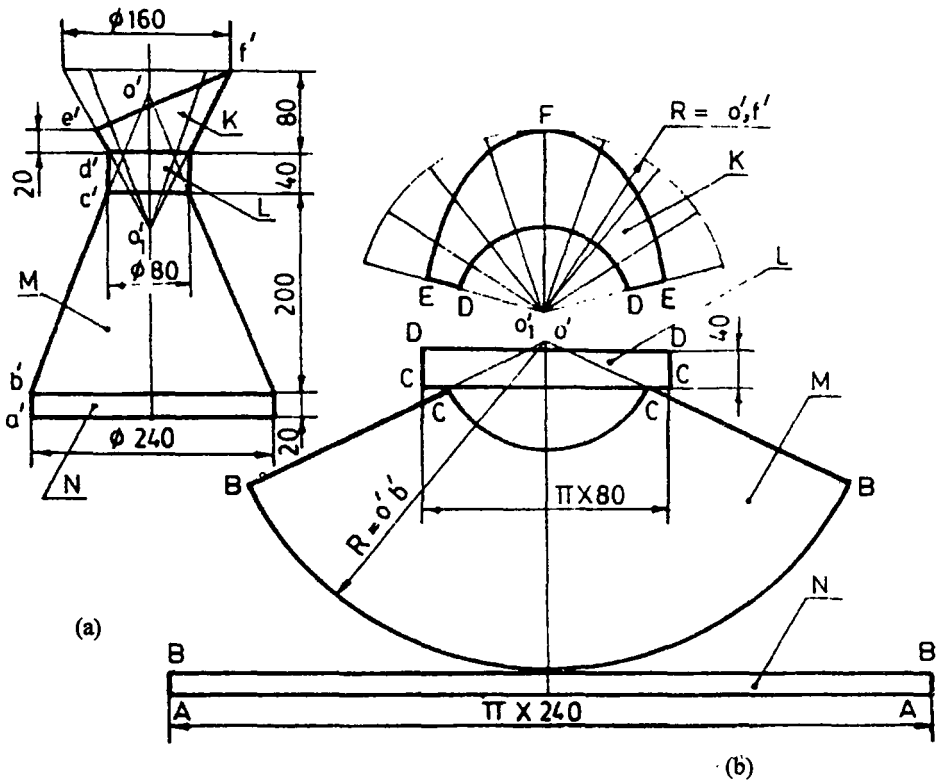

Fig. 7.26 Development of a Measuring Can

EXERCISE

Development of Surfaces

1. A frustrum of a square pyramid has its base 50 mm side, top 25 mm side and height 60 mm. It is resting with its base on HP, with two of its sides parallel to VP. Draw the projections of the frustrum and show the development of its lateral surface.
2. A cone of diameter 60 mm and height 80 mm is cut by a section plane such that the plane passes through the mid-point of the axis and tangential to the base circle. Draw the development of the lateral surface of the bottom portion of the cone.
3. A cone of base 50 mm diameter and axis 75 mm long, has a through hole of 25 mm diameter. The centre of the hole is 25 mm above the base. The axes of the cone and hole intersect each other. Draw the development of the cone with the hole in it.
4. A transition piece connects a square pipe of side 25 mm at the top and circular pipe of 50 mm diameter at the bottom, the axes of both the pipes being collinear. The height of the transition piece is 60 mm. Draw its development.
5. Figure 7.27 shows certain projections of solids. Draw the developments of their lateral surfaces.

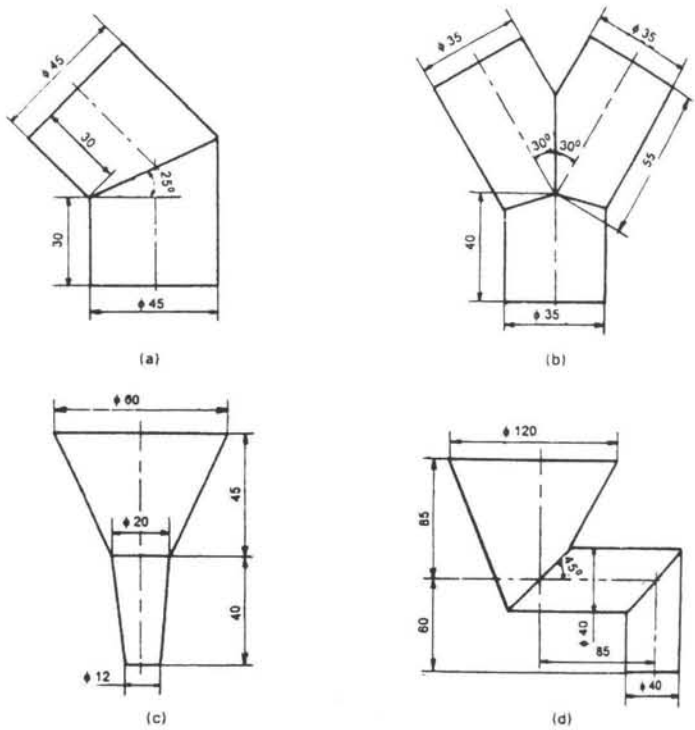

Fig. 7.27 ®

CHAPTER 8

Intersection of Surfaces

8.1 Introduction

Ducts, pipe joints, smoke stacks, boilers, containers, machine castings etc., involve intersection of surfaces. Sheetmetal work required for the fabrication of the above objects necessiate the preparation of the development of the joints/ objects. Orthographic drawings of lines and curves of intersection of surfaces must be prepared first for the accurate development of objects. Methods of obtaining the lines and curves of intersection of surfaces of cylinder and cylinder, prism and prism are shown to introduce the subject. Figure 8.1 Shows intersection of two cylinders.

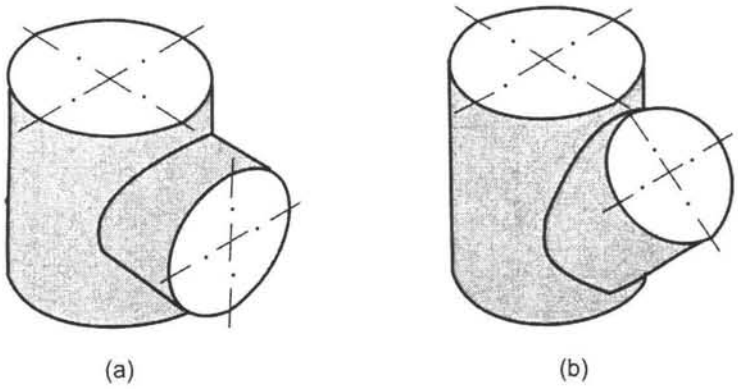

Fig. 8.1

8.2 Intersection of cylinder and cylinder

Example 1: *A horizontal cylinder of diameter 40 mm penetrates into a vertical cylinder of diameter 60 mm. The axes of the cylinders intersect at right angles. Draw the curves of intersection when the axis of the horizontal cylinder is parallel to the VP.*

Solution **:** (Fig 8.2)

1. Draw the top and front views of the cylinders.
2. Draw the left side view of the arrangement.
3. Divide the circle in the side view into number of equal parts say 12.

4. The generators of the horizontal cylinder are numbered in both front and top views as shown.
5. Mark point m, where the generator through 1 in the top view meets the circle in the top view of the vertical cylinder. Similarly mark m_2,.....m_{12}.
6. Project m^1_7 to m^1_1 on the generator 1^1 1^1 in the front view.
7. Project m^7 to m^1_7 on 7^1_7. Similarly project all the point.
8. Draw a smooth curve through m^1_1.....m^1_7.

   This curve is the intersection curve at the front. The curve at the rear through m^1_4, m^1_8------ -m^1_{12} coincides with the corresponding visible curve at the front.

   Since the horizontal cylinder penetrates and comes out at the other end, similar curve of intersection will be seen on the right also.
9. Draw the curve through n^1_1..... n^1_7 following the same procedure. The two curves m^1_1-m^1_7 and n^1_1-n^1_7 are the required curves of intersection.

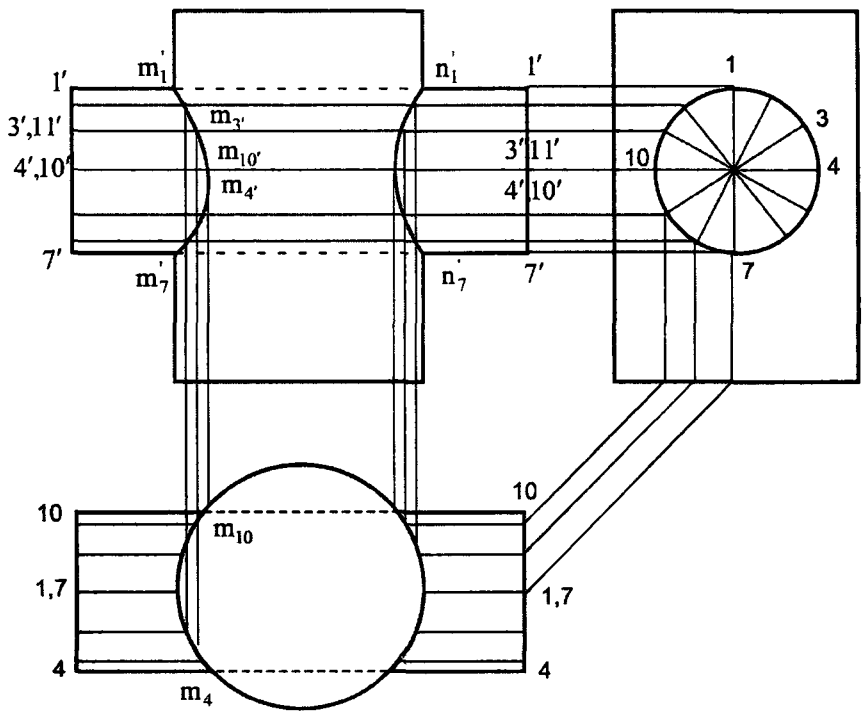

Fig. 8.2

Case II Cylinders of Same size

Example 2: *A T-pipe connection consists of a vertical cylinder of diameter 80mm and a horizontal cylinder of the same size. The axes of the cylinders meet at right angles. Draw the curves of intersection.*

Construction : (Fig 8.3)

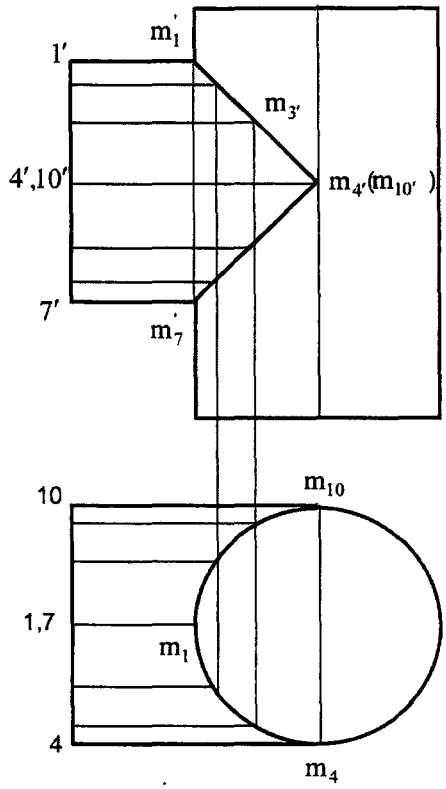

Fig. 8.3

The procedure to be followed is the same as that in example above. The curves of intersection appear as straight lines in the front view as shown in the figure. The two straight lines are at right angles.

Example 3: *A vertical cylinder of diameter 120 mm is fully penetrated by a cylinder of diameter 90 mm, their axes intersecting each other. The axis of the penetrating cylinder is inclined at 30⁰ to the HP and is parallel to the VP. Draw the top and front views of the cylinders and the curves of intersection.*

Construction : (Fig 8.4)

1. Draw the top and front views of the cylinders.
2. Following the procedure in example 1 locate points m_1 in the top view. Project them to the corresponding generators in the inclined cylinder in the front view to obtain points m^1_1, m^1_2 etc.
3. Locate points n^1_1 .....n^1_{10} etc., on the right side using the same construction.
4. Draw smooth curves through them to get the required curve of intersection as shown in the figure.

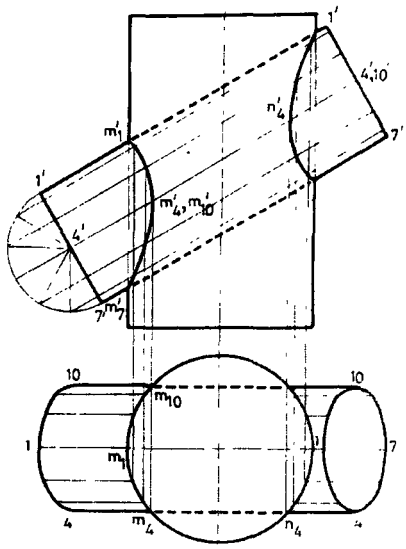

Fig. 8.4

8.3 Intersection of prism and prism

When a prism penetrates another prism, plane surface of one prism intersects the plane surfaces of another prism and hence the lines of intersection will be straight lines. In these cases, lines on the surface of one of the solids need not necessarily be drawn as it is done with cylinders. Instead, the points of intersections of the edges with the surface are located by mere inspection. These points are projected in the other view and the lines of intersection obtained.

Example 4: *A square prism of base side 60 mm rests on one of its ends on the HP with the base sides equally inclined to the VP. It is penetrated fully by another square prism of base side 45 mm with the base side equally inclined to the HP. The axes intersect at right angles. The axis of the penetrating prism is parallel to both the HP and the VP. Draw the projections of the prisms and show the lines of intersection.*

Construction : (Fig 8.5)

1. Draw the top and front view of the prisms in the given position.
2. Locate the points of intersection of the penetrating prism with the surfaces of the vertical prism in the top view by inspection. Here, the edges $2\text{-}2_1$, of the horizontal prism intersects the edge point of the vertical prism at m_2 in the top view. n_4 corresponds to the edge $4\text{-}4_1$, and the immediately below m_2, m_1 and m_3 relate to $1\text{-}1_1$, and $3\text{-}3_1$ respectively.
3. Similarly locate points n_1, n_2, n_3 and n_4.
4. Project m_1 onto $1^1\text{-}1^1_1$ in the front view as m^1_1. Similarly project all other points. m^1_3 coincides with m^1_1 and n^1_3 coincides with n^1_1.
5. Join m^1_2 m^1_1 and m^1_1 m^1_4 by straight lines. Join n^1_2 n^1_1 and n^1_1 n^1_4 also by straight lines.

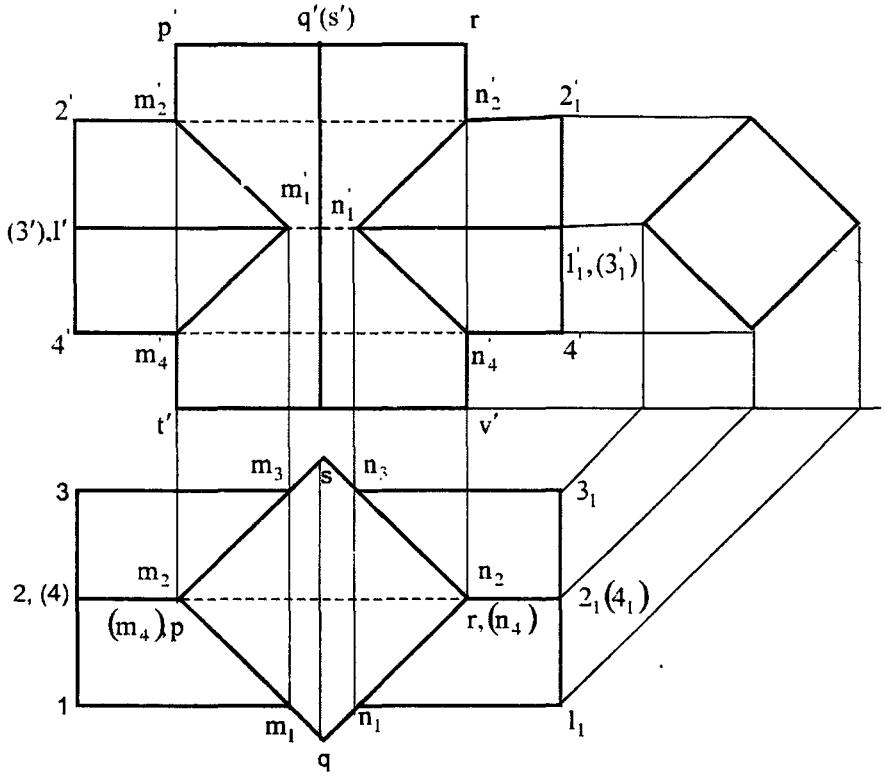
p'
q'(s')
r
2'
m'2
n'2
2'1
m'1
n'1
(3').1'
1'1,(3'1)
4'
m'4
n'4
4'
t'
v'
m3
s
n3
3
31
m2
n2
2, (4)
21(41)
(m4)p
r,(n4)
1
m1
n1
11
q

Fig. 8.5

CHAPTER 9

Isometric Projection

9.1 Introduction

Pictorial projections are used for presenting ideas which may be easily understood by persons even with out technical training and knowledge of multi-view drawing. The Pictorial drawing shows several faces of an object in one view, approximately as it appears to the eye.

9.2 Principle of Isometric Projections

It is a pictorial orthographic projection of an object in which a transparent cube containing the object is tilted until one of the solid diagonals of the cube becomes perpendicular to the vertical plane and the three axes are equally inclined to this vertical plane.

Insometric projection of a cube in steps is shown in Fig.9.1. Here ABCDEFGH is the isometric projection of the cube.

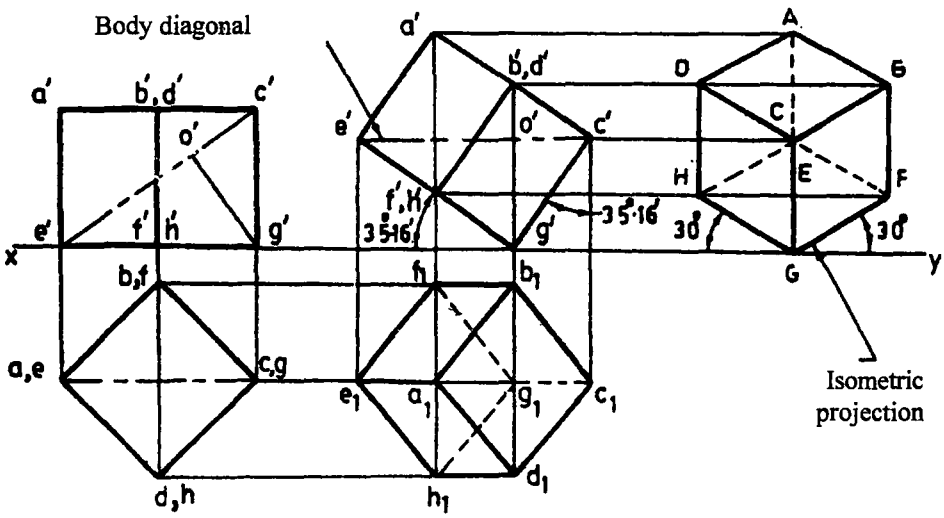

Fig. 9.1 Principle of Isometric Projection

The front view of the cube, resting on one of its corners (G) is the isometric projection of the cube. The isometric projection of the cube is reproduced in Fig.9.2.

Isometric Scale

In the isometric projection of a cube shown in Fig.9.2, the top face ABCD is sloping away from the observer and hence the edges of the top face will appear fore-shortened. The true shape of the triangle DAB is represended by the triangle DPB.

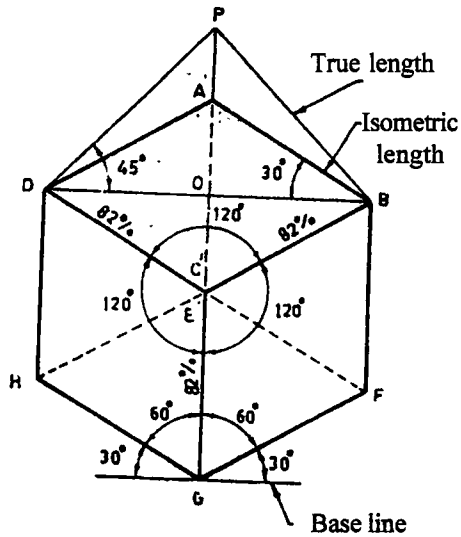

Fig. 9.2 An isometric Cube

The extent of reduction of an sometric line can be easily found by construction of a diagram called **isometric scale**. For this, reproduce the triangle DPA as shown in Fig.9.3. Mark the devisions of true length on DP. Through these divisions draw vertical lines to get the corresponding points on DA. The divisions of the line DA give dimensions to isometric scale.

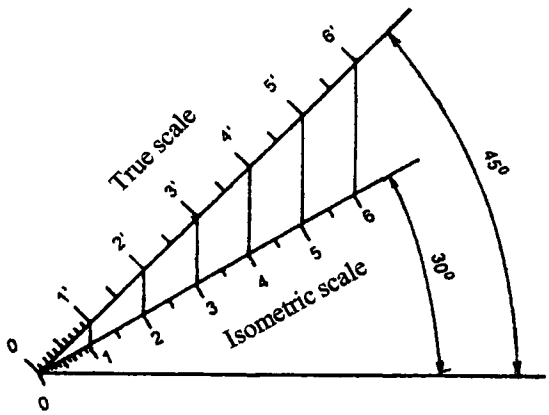

Fig. 9.3 Isometric Scale

From the triangle ADO and PDO in Fig.9.2, the ratio of the isometric length to the true length, i.e., DA/DP = cos 45°/cos30° = 0.816

The isometric axes are reduced in the ratio 1:0.816 ie. 82% approximately.

9.2.1 Lines in Isometric Projection

The following are the relations between the lines in isometric projection which are evident from Fig.9.2.

1. The lines that are parallel on the object are parallel in the isometric porjection.
2. Vertical lines on the object appear vertical in the isometric projection.
3. Horizontal lines on the object are drawn at an angle of 30° with the horizontal in the isometric projection.
4. A line parallel to an isometric axis is called an isometric line and it is fore shortened to 82%.
5. A line which is not parallel to any isometric axis is called non-isometric line and the extent of fore-shoretening of non-isometric lines are different if their inclinations with the vertical planes are different.

9.2.2 Isometric Projection

Figure 9.4(a) shows a rectangular block in pictorial form and Fig. 9.4(b), the steps for drawing an isometric projection using the isometric scale.

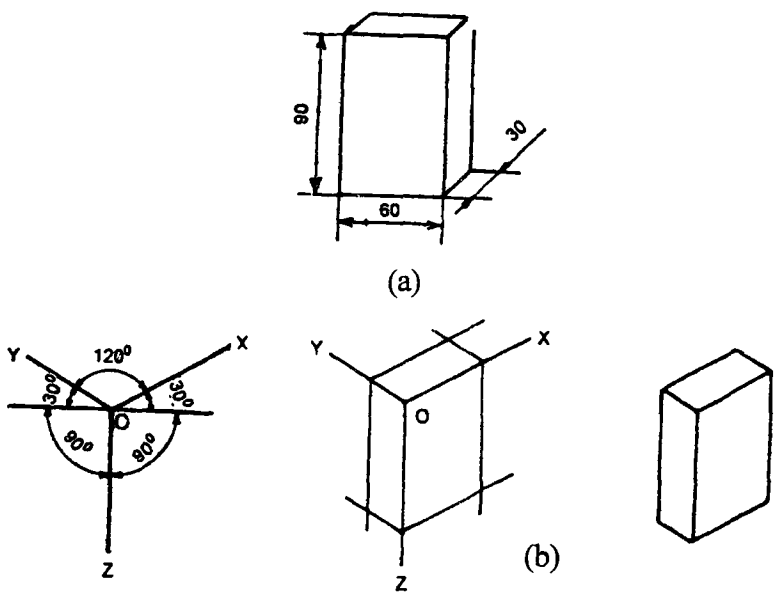

Fig. 9.4 Developing Isometric Projection

9.2.3 Isometric Drawing

Drawing of objects are seldom drawn in true isometric projections, as the use of an isometric scale is inconvenient. Instead, a convenient method in whichtheforeshorten-ing of lengths is ignored and actual or true lengths are used to obtain the projections, called isometric drawing or isometric view is normally used. This is advantageous becausethe measurement may be made directly from a drawing.

The isometric drawing of figure is slightly larger (approximaely 22%) than the isometric projection. As the proportions are the same, the increased size does not affect the pictorial value of the representation and at the same time, it may be done quickly. Figure 9.5 shows the difference between the isometric drawing and isometric projection.

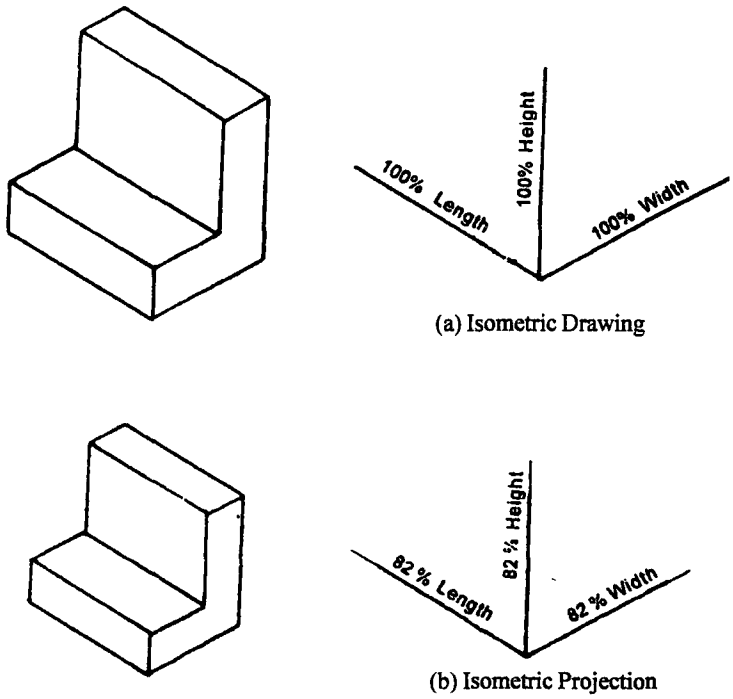

Fig. 9.5

Steps to be followed to make isometric drawing from orthographic views are given below (Fig. 9.6).

1. Study the given views and note the principal dimensions and other features of the object.
2. Draw the isometric axes (a).
3. Mark the principal dimensions to their true values along the isometric axes(b).
4. Complete the housing block by drawing lines parallel to the isometric axes and passing through the above markings(c).

5. Locate the principal corners of all the features of the object on the three faces of the housing block(d).
6. Draw lines parallel to the axes and passing through the above points and obtain the isometric drawing of the object by darkening the visible edges(e).

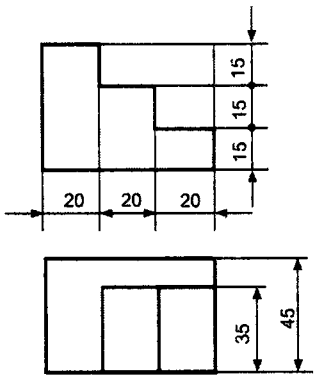

Fig. 9.6(a) Otrhographic view

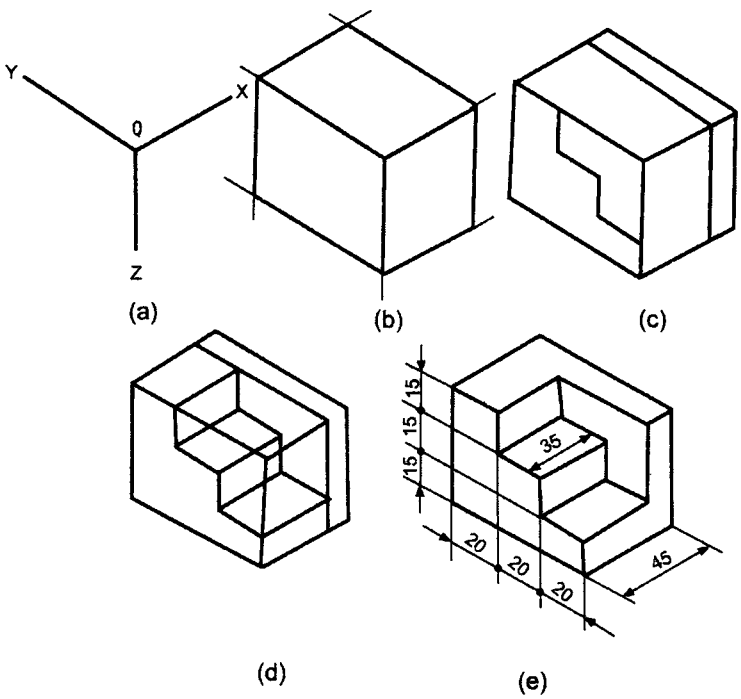

Fig. 9.6(b) Isometric View

9.2.4 Non-Isometric Lines

In an isometric projection or drawing, the lines that are not parallel to the isometric axes are called non-isometric lines. These lines obviously do not appear in their true length on the drawing and can not be measured directtly. These lines are drawn in an isometric projection or drawing by locating their end points.

Figure 9.7 shows the steps in constructing an isometric drawing of an object containing non-isometric lines from the given orthographic views.

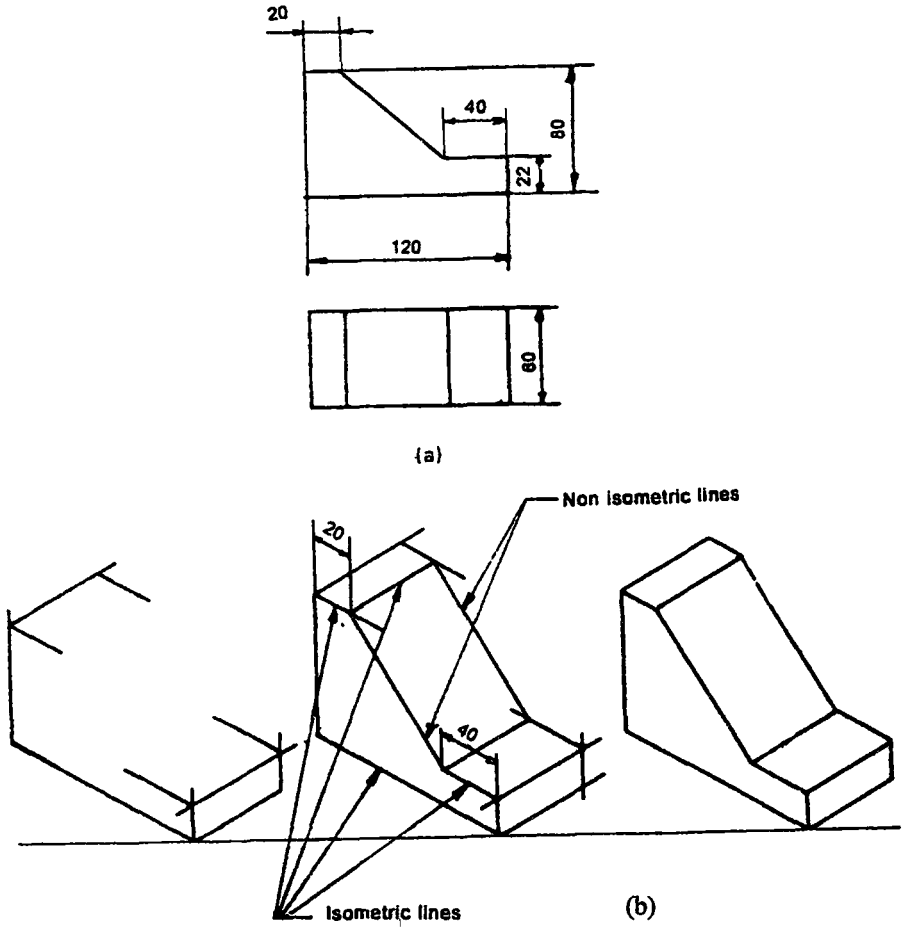

Fig. 9.7

9.3 Methods of Constructing Isometric Drawing

The methods used are :

1. Box method.
2. Off-set method.

9.3.1 Box Method (Fig. 9.8)

When an object contains a number of non-isometric lines, the isometric drawing may be conveniently constructed by using the box method. In this method, the object is imagined to be enclosed in a rectrangular box and both isometric and non-isometric lines are located by their respective points of contact with the surfaces and edges of the box.

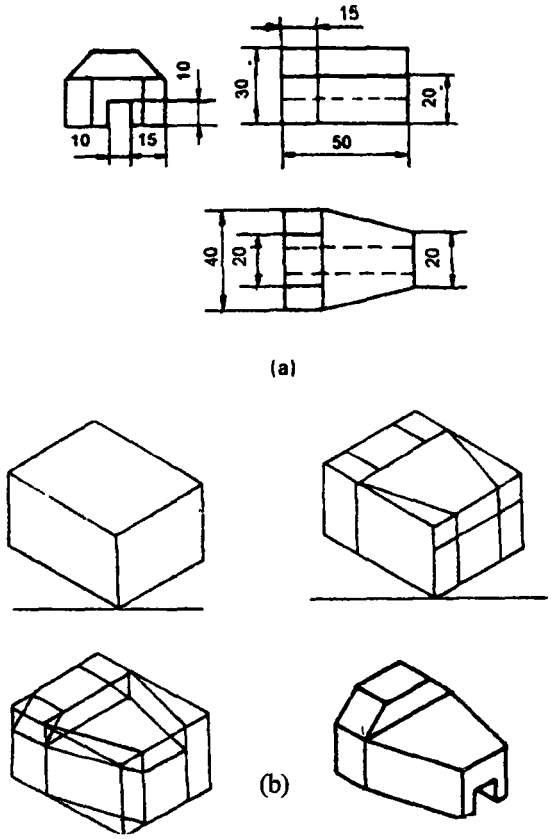

Fig. 9.8

9.3.2 Off-set Method

Off-set method of making an isometric drawing is preferred when the object contains irregular curved surfaces. In the off-set method, the curved feature may be obtained by plotting the points on the curve, located by the measurements along isometric lines. Figure 9.9 illustrates the application of this method.

9.4 Isometric Projection of Planes

Problem : *Draw the isometric projection of a rectangle of 100mm and 70mm sides if its plane is (a) Vertical and (b) Hirizontal.*

Constructon (9.10)

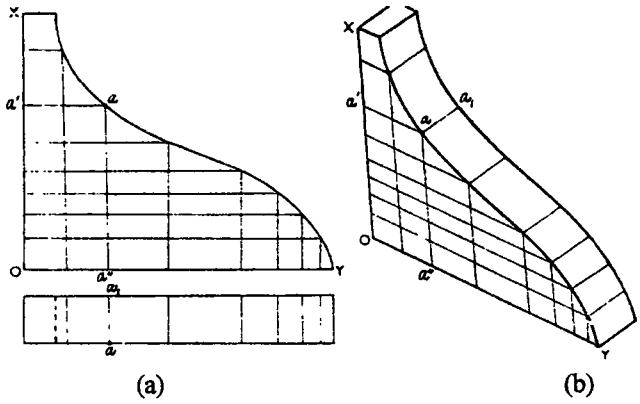

Fig. 9.9

1. Draw the given rectangle ABCD as shown in Fig.9.10(a).

Note :

(i) In the isometric projection, vertical lines are drawn vertical and the horizontal lines are drawn inclined 30^0 to the base line.

(ii) As the sides of the rectangle are parallel to the isometric axes they are fore-shortened to approximately 82% in the isometric projections.

Hence AB = C D = 1000 x 0.82mm = 82mm. Similary, B C = A D = 57.4mm.

(a) When the plane is vertical:

2. Draw the side A D inclined at 30^0 to the base line as shwon in Fig.9.10b and mark A D = 57.4mm.
3. Draw the verticals at A and D and mark off A B = D C = 82mm on these verticals.
4. Join B C which is parallel to A D.

A B C D is the required isometric projection. This can also be drawn as shown in Fig.9.10c. Arrows show the direction of viewing.

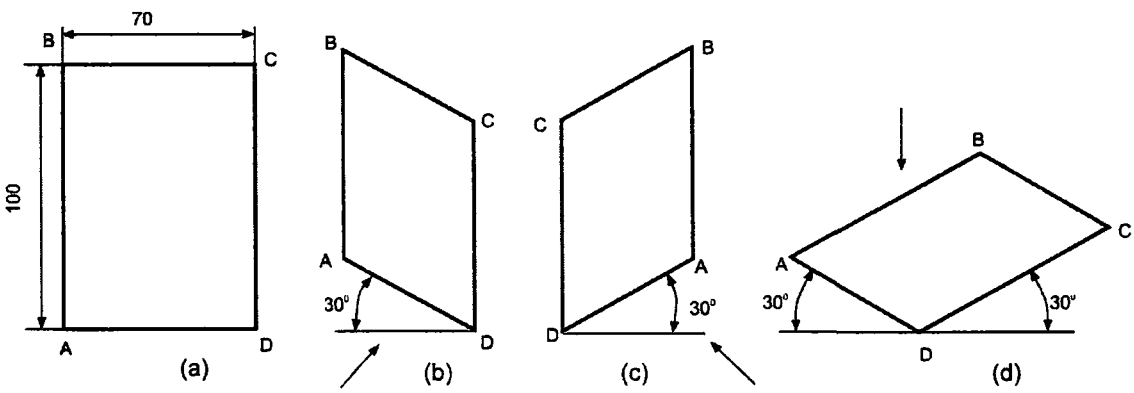

Fig. 9.10

(b) When the plane is horizontal.

5. Draw the sides AD and DC inclined at 30° to be base line and complete the isometric projection A B C D as shown in Fig.9.10d. Arrow at the top shows the direction of viewing.

To draw the isometric projection of a square plane. (Fig. 9.11a)

Construction (Fig. 9.11)

Case 1 Vertical plane (Fig. 9.11b)

1. Draw a line at 30° to the horizontal and mark the isometric length on it.
2. Draw verticals at the ends of the line and mark the isometric length on these parallel lines.
3. Join the ends by a straight line which is also inclined at 30° to the horizontal.

There are two possible positions for the plane.

Case II Horizontal plane (Fig. 9.11c)

1. Draw two lines at 30° to the horizontal and mark the isometric length along the line.
2. Complete the figure by drawing 30° inclined lines at the ends till the lines intersect.

Note

(i) The shape of the isometric projection or drawing of a square is a **Rhombus**.

(ii) While dimensioning an isometric projection or isometric drawing true dimensional values only must be used.

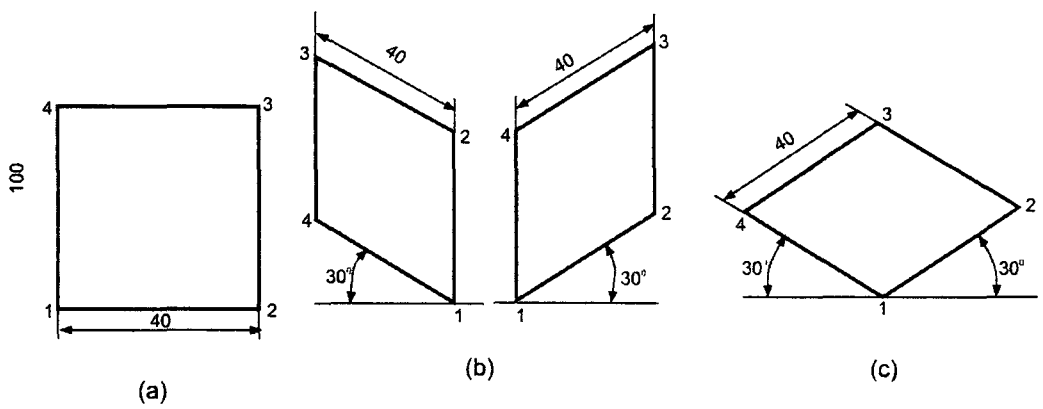

Fig. 9.11

Problem : Figure 9.12a shows the projection of a pentagonal plane. Draw the isometric drawing of the plane (i) when the surface is parallel to V.P and (ii) parallel to H.P.

Construction (Fig. 9.12)

1. Enclose the given pentagon in a rectangle 1234.
2. Make the isometric drawing of the rectangle 1234 by using true lengths.
3. Locate the points A and B such that 1a = 1A and 1b = 1B.

4. Similarly locate point C, D and E such that 2c = 2C, 3d = 3D and e4 = E4.
5. ABCDE is the isometric drawing of the pentagon.
6. Following the above princple of construction 9.12c can be

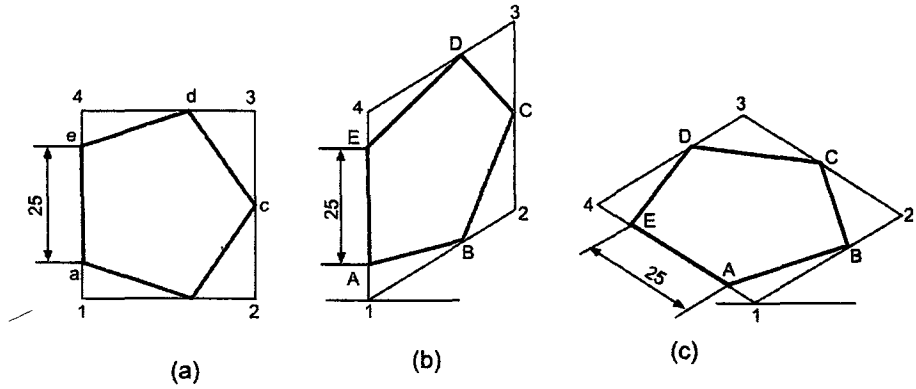

Fig. 9.12

Problem : *Draw the isometric view of a pentagonal plane of 30mm side when one of its sides is parallel to H.P. (a)When it is horizontal and (b)vertical.*

Construction (9.13)

1. Draw the pentagon ABCDE and enclose it in a rectangle 1-2-3-4 as shown in Fig.9.13a.

(a) When it is horizontal the isometric view of the pentagon can be represented by ABCDE as shown in Fig.9.13b.

(b) When the plane is vertical it can be represented by ABCDE as shown in Fig.9.13c or d.

Note : It may be noted that the point A on the isometric view can be marked after drawing the isometric view of the rectangle 1-2-3-4 for this, mark 1A' = 1A and so on.

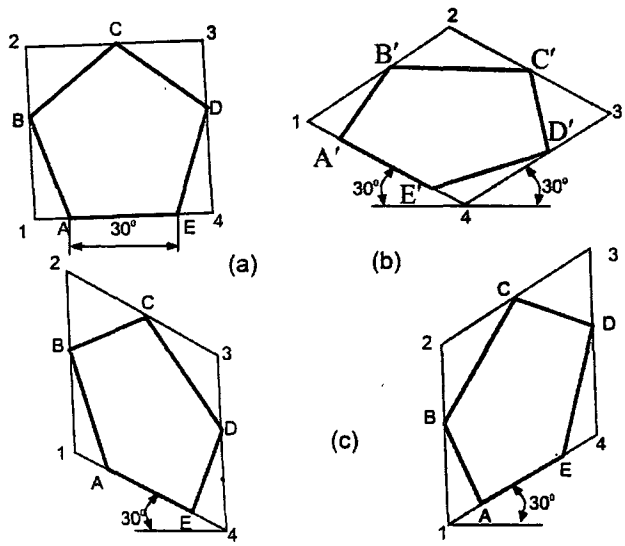

Fig. 9.13

Problem : Figure 9.14a shows the orthographic view of a heyagonal plane of side 30mm. Draw the isometric drawing (view) of the plane keeping it (a) horizontal and (b)vertical.

Construction (Fig. 9.14)

Following the principle of construction of Fig.9.13 obtain the figure 9.14b and 9.14c respectively for horizontal and vertical position of the plane.

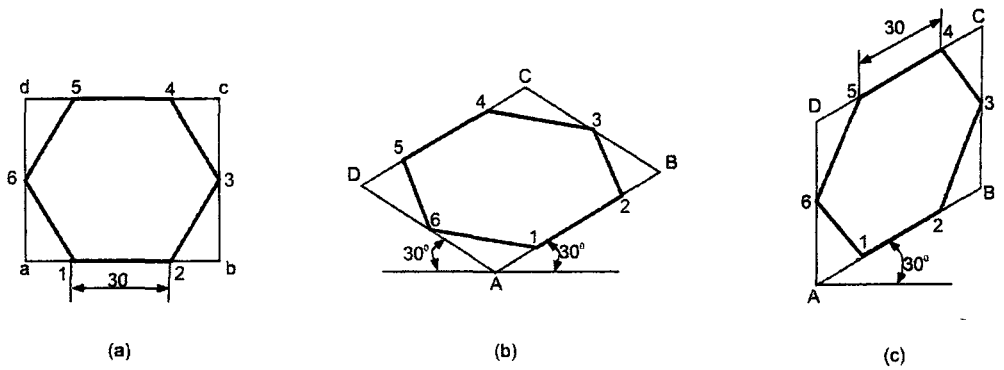

Fig. 9.14

Problem : *Draw the isometric view of a circular plane of diameter 60mm whose surface is (a) Horizontal, (b) Vertical.*

Construction (Fig. 9.15) using the method of points

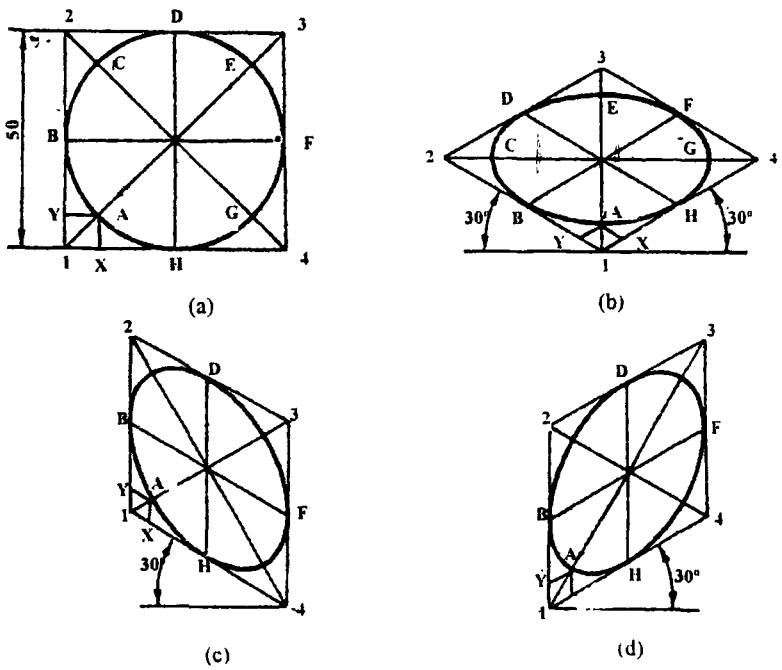

Fig. 9.15

1. Enclose the circle in a square 1-2-3-4 and draw diagonals, as shown in Fig. 9.15a. Also draw lines YA horizontallly and XA vertically.

   To draw the isometeric view of the square 1-2-3-4 as shown in Fig.9.15b.
2. Mark the mid points of the sides of the square as B D F and H.
3. Locate the points X and Y on lines 1-4 and 1-2 respectively.
4. Through the point X, draw A X parallel to line 1-2 to get point A on the diagonal 1-3. The point A can be obtained also by drawing Y A through the point Y and parallel to the line 1-4.
5. Similarly obtain other points C, E and G.
6. Draw a smooth curve passing through all the points to obtain the required isometric view of the horizontal circular plane.
7. Similarly obtain isometric view of the vertical circular plane as shown in Fig.9.15c and d.

Problem : *Draw the isometric projection of a circular plane of diameter 60mm whose surface is (a) Horizontal and (b) Vertical-use four-centre method.*

Construction (Fig.9.16)

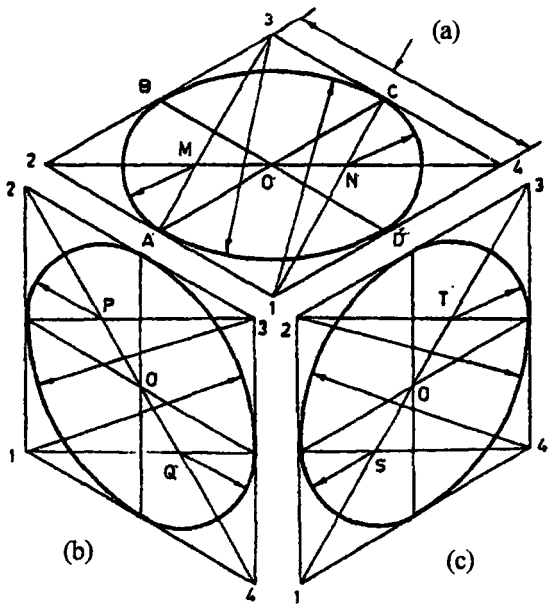

Fig. 9.16

1. Draw the isometric projection of the square 1-2-3-4 (rhombus) whose length of side is equal to the isometric length of the diameter of the circle = 0.82 x 60.
2. Mark the mid points A', B', C' and D' of the four sides of the rhombus. Join the points 3 and A'. This line intersects the line 2-4 joining the point 2 and 4 at M'. Similarly obtain the intersecting point N.
3. With centre M and radius = MA draw an arc A B. Also draw an arc C D with centre N.

4. With centre 1 and radius = 1C, draw an ace B C. Also draw the arc A D.
5. The ellipse A B C D is the required isometric projection of the horizontal circular plane (Fig.9.16a).
6. Similarly obtain the isometric projection in the vertical plane as shown in Fig.9.16b & c.

Problem : *Draw the isometric view of square prism with a side of base 30mm and axis 50mm long when the axis is (a) vertical and (b)horizontal.*

Construction (Fig.9.17)

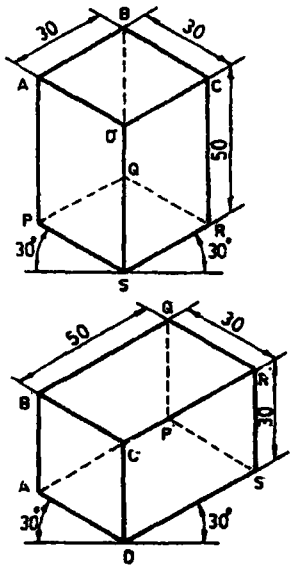

Fig. 9.17 Isometric drawing of a square prism

(a) Case 1 when the axis is vertical

1. When the axis of the prism is vertical, the ends of the prism which is square will be horizontal.
2. In an isometric view, the horizontal top end of the prism is represented by a rhombus ABCD as shown in Fig.9.17a. The vertical edges of the prism are vetical but its horizontal edges will be inclined at 30° to the base.

(b) Case II when the axis is horizontal

When the axis of the prism is horizontal, the end faces of the prism which are square, will be vertical. In the isometric view, the vertical end face of prism is represented by a rhombus ABCD. The isometric view of the prism is shown in Fig.9.17b.

9.5 Isometric Projection of Prisms

Problem : *Draw the isometric view of a pentagonal prism of base 60mm side, axis 100mm long and resting on its base with a vertical face perpendicular to V.P.*

Construction (Fig. 9.18)

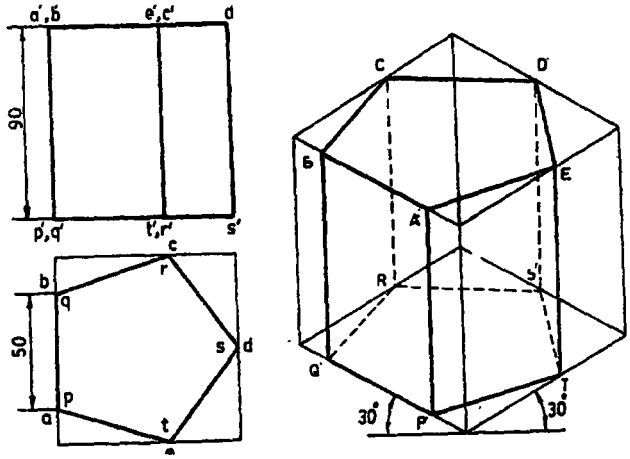

Fig. 9.18 Isometric Drawing of a Pentogonal Prism

1. The front and top views of the prism are shown in Fig.9.18a.
2. Enclose the prism in a rectangular box and draw the isometric view as shown in Fig.9.18b using the box method.

Problem : *A hexagonal prism of base of side 30mm and height 60mm is resting on its base on H.P. Draw the isometric drawing of the prism.*

Construction (Fig.9.19)

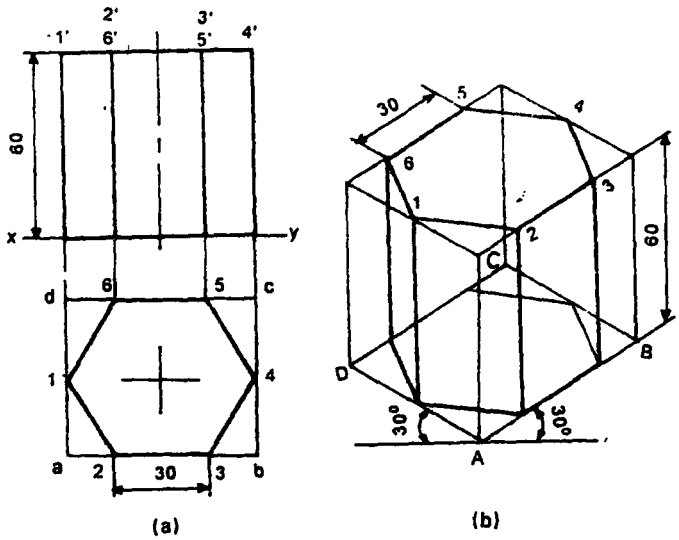

Fig. 9.19 Isometric Drawing of a Hexagonal Prism

1. Draw the orthographic views of the prism as shown in Fig.9.19a.
2. Enclose the views in a rectangle (ie the top view -base- and front views).
3. Determine the distances (off-sets) of the corners of the base from the edges of the box.
4. Join the points and danken the visible edges to get the isometric view.

9.6 Isometric Projection of Cylinder

Problem : *Make the isometric drawing of a cylinder of base diameter 20mm and axis 35mm long.*

Constructon (Fig. 9.20)

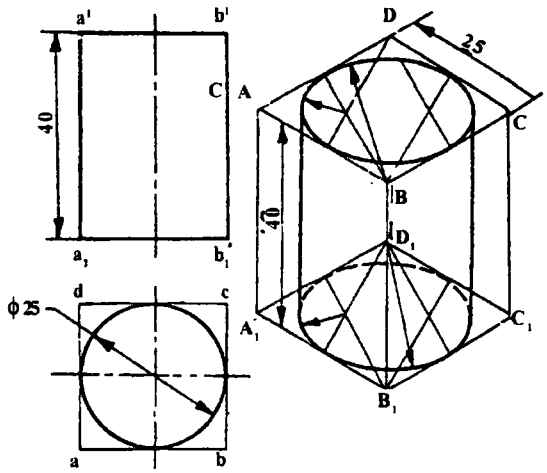

Fig. 9.20 Isometric Drawing of a Cylinder

1. Enclose the cylinder in a box and draw its isometric drawing.
2. Draw ellipses corresponding to the bottom and top bases by four centre method.
3. Join the bases by two common tangents.

9.7 Isometric Projection of Pyramid

Problem : *A pentagonal pyramid of side of base 30mm and height 70mm is resting with its base on H.P. Draw the isometric drawing of the pyramid.*

Construction (Fig. 9.21)

1. Draw the projections of the pyramind (Fig.9.21a).
2. Enclose the top view in a rectangle **abcde** and measure the off-sets of all the corners of the base and the vertex.
3. Draw the isometric view of the rectangle ABCD.
4. Using the off-sets locate the corners of the base 1,2, etc. and the vertex o.
5. Join o-1, o-2, o-3, etc. and draken the visible edges and obtain the required view.

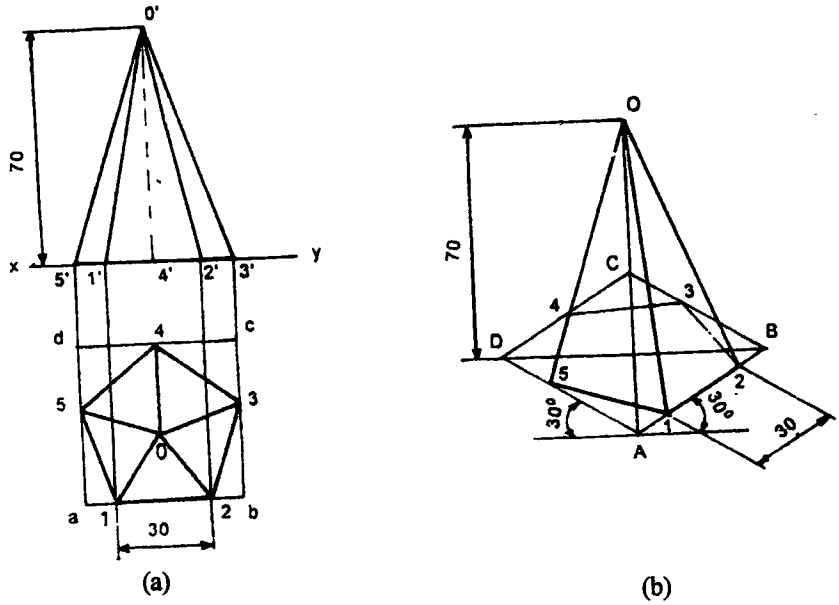

Fig. 9.21

9.8 Isometric Projection of Cone

Problem : *Draw the isometric drawing of a cone of base diameter 30mm and axis 50mm long.*

Construction (Fig.9.22) off-set method.

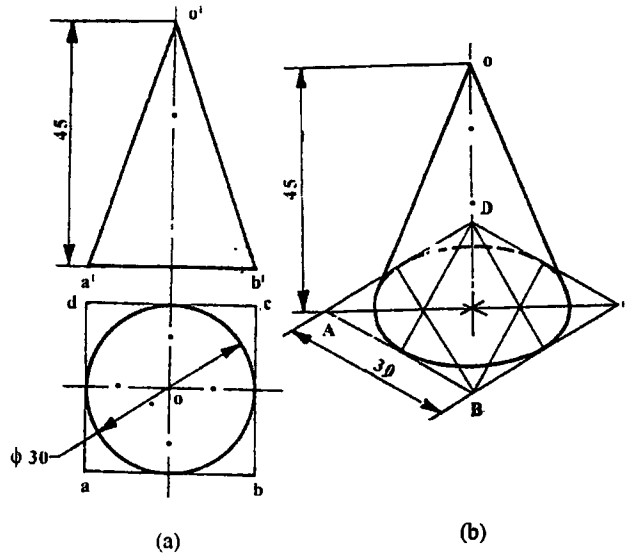

Fig. 9.22 Isometric Drawing of a Cone

1. Enclose the base of the cone in a square (9.22a).
2. Draw the ellipse corresponding to the circular base of the cone.
3. From the centre of the ellipse draw a vertical centre line and locate the apex at a height of 50mm.
4. Draw the two outer most generators from the apex to the ellipse and complete the drawing.

9.9 Isometric Projectin Truncated Cone

Problem : *A right circular cone of base diameter 60mm and height 75mm is cut by a plane making an angle of 30⁰ with the horizontal. The plane passes through the mid point of the axis. Draw the isometric view of the truncated solid.*

Construction (Fig.9.23)

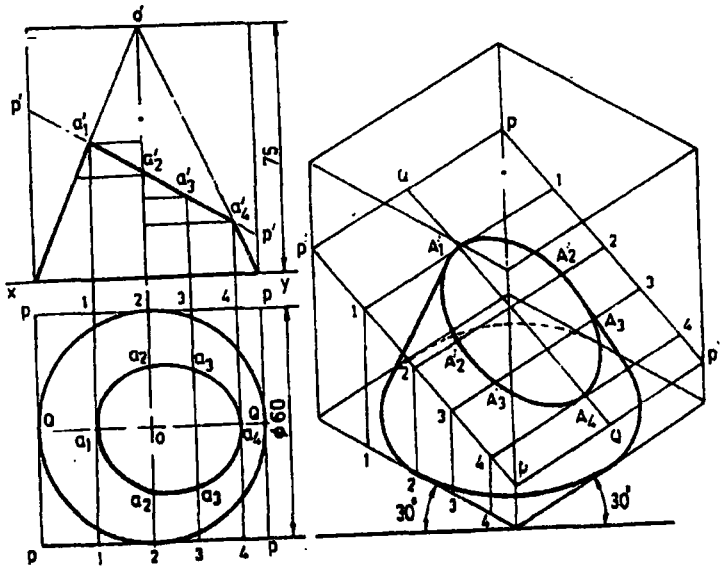

Fig. 9.23 Isometric view of a trauncated cone

1. Draw the front and top views of the cone and name the points (Fig.9.23a)
2. Draw a rectangular prism enclosing the complete pyramid.
3. Mark the plane containing the truncated surface of the pyramid. This plane intersects the box at PP in the front view and PPPP in the top view.
4. Draw the isometric view of the cone and mark the plane P P P P, containing the truncated surface of the pyramid as shown in Fig.9.23b.
5. Draw the isometric view of the base of the cone which is an ellipse.
6. It is evident from the top view that the truncated surface is symmetrical about the line qq. Hence mark the corresponding line Q Q in the isometric view.

7. Draw the line 1-1, 2-2, 3-3 and 4-4 passing through the points a_1, a_2,a_3, and a_4 in the top view. Mark the points 1,2,3,4 on the corresponding edge of the base of the cone and transfer these points to the plane P P P P by drawing verticals as shown.
8. Point a^1 is the point of intersection of the lines qq and 1-1 in the top view. The point A_1 corresonding to the point a_1 is the point of intersection of the lines Q Q and 1-1 in the isometric view. Hence mark the the point A_1 Point Q_0 lies on the line 2-2 in top view and its corresponding point in the isometric view is represented by A2 on the line 2-2 such that $2a_2 = 2A_2$. Similarly obtain the remaining points A_3 and AA. Join these points by a smooth curve to get the truncated surface which is an ellipse.
9. Draw the common tangents to the ellipse to get the completed truncated cone.

Examples

The orthographic projections and the isometric projections of some solids and machine components are shown from Fig.9.24 to 9.34.

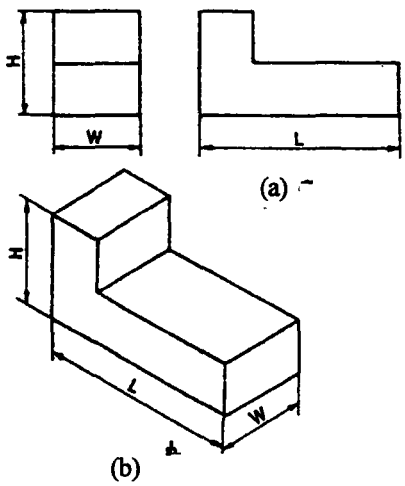

Fig. 9.24

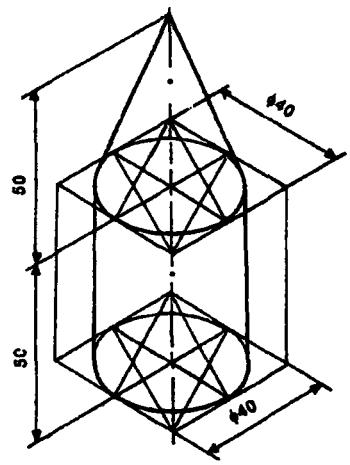

Fig. 9.25

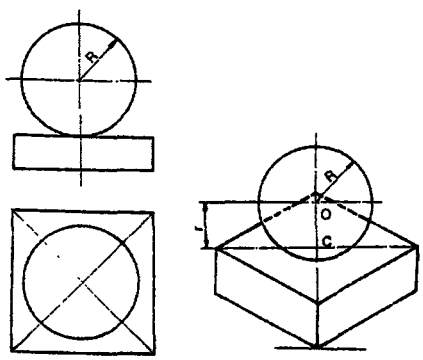

Fig. 9.26

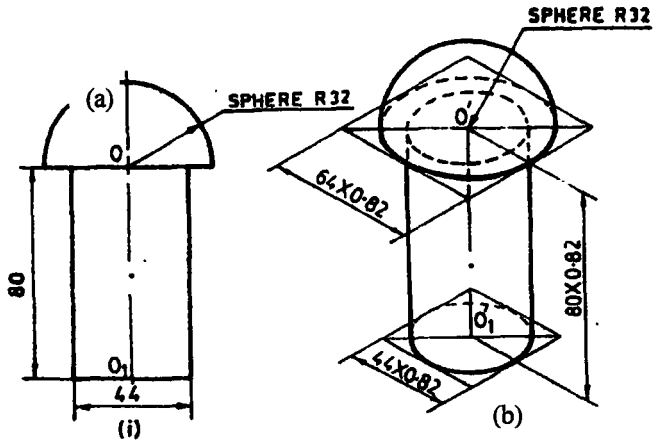

Fig. 9.27

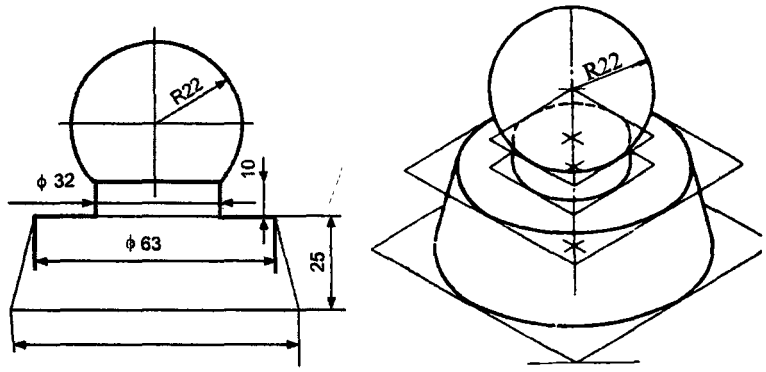

Fig. 9.28

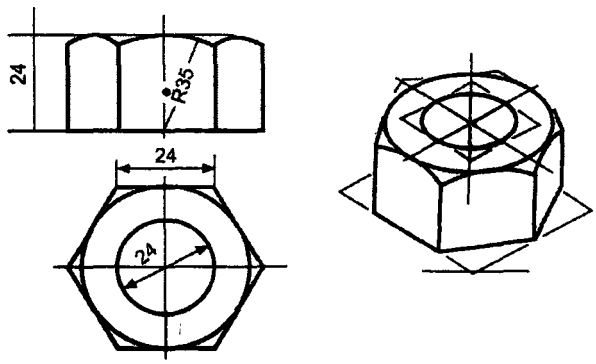

Fig. 9.29

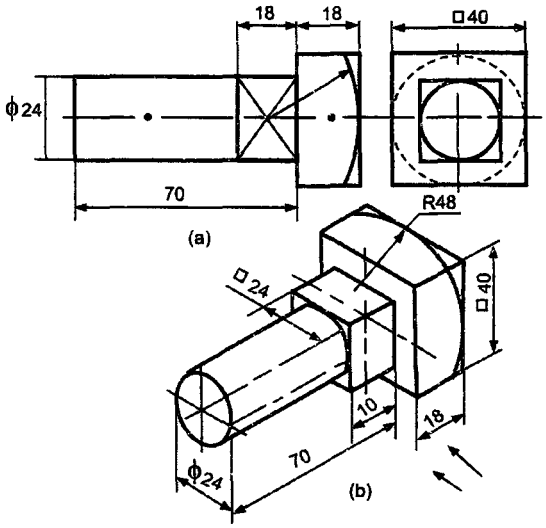

Fig. 9.30

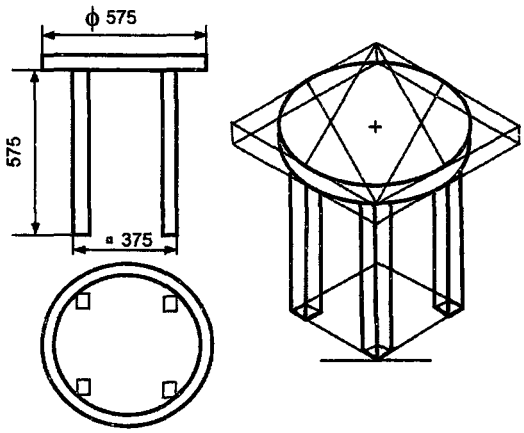

Fig. 9.31

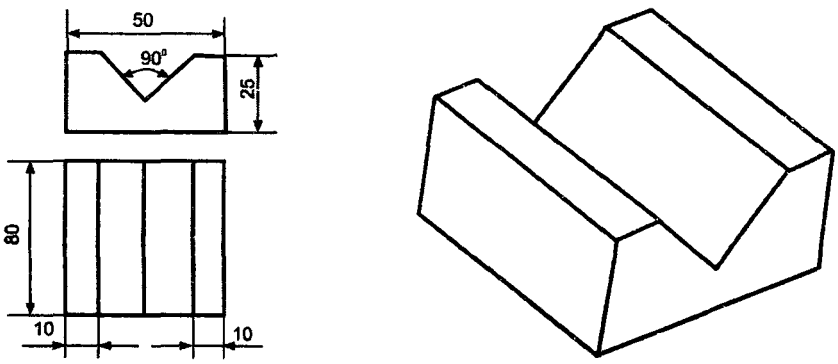

Fig. 9.32 V- Block

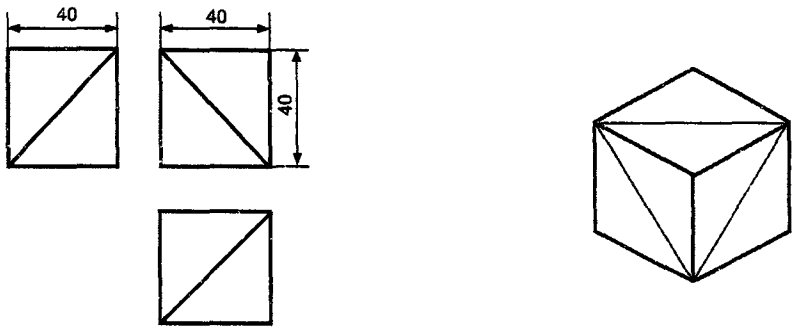

Fig. 9.33 Wedge Piece

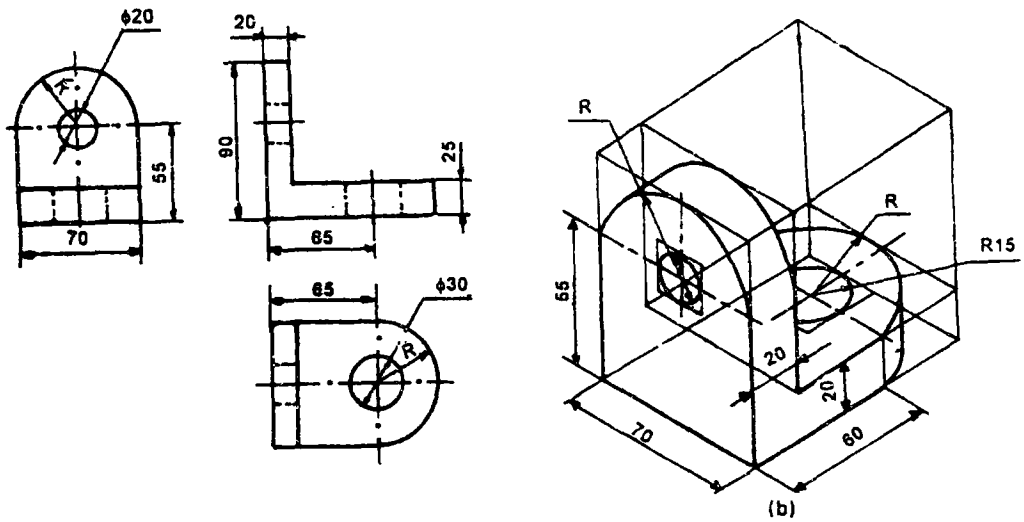

Fig. 9.34 Angle Plate

Problem : *The orthographic projections and their isometric drawings of a stool and a house are shown in figures 9.35 and 9.36.*

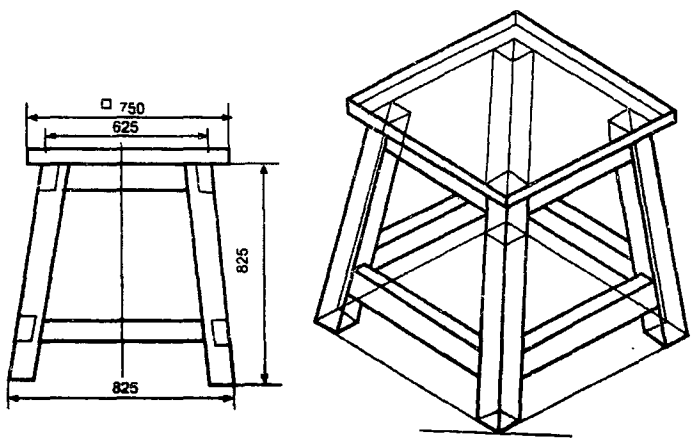

Fig. 9.35 Stool

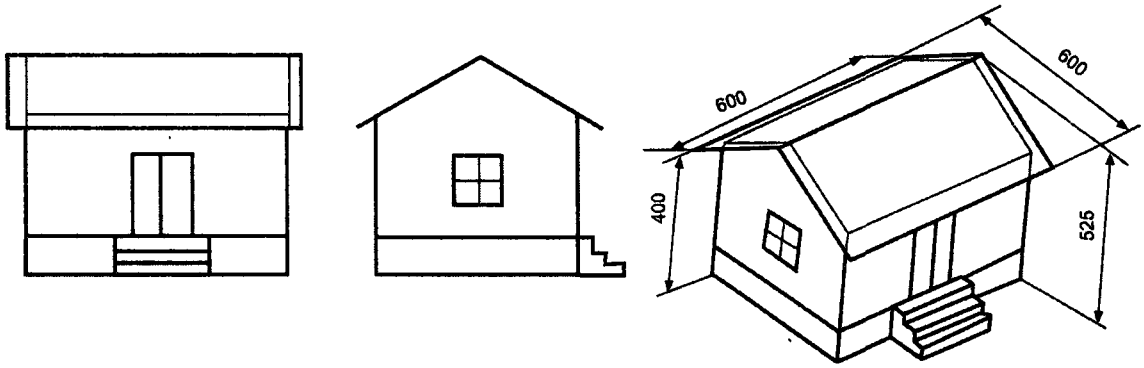

Fig. 9.36 House

CHAPTER 10

Oblique and Perspective Projections

10.1 Introduction

Pictorial projections are used for presenting ideas which may be easily understood by all without technical training. They show several faces of an object in one view, as it appears to the eye approximately. Among the pictorial projections, Isometric Projections are the most common as explained in previous chapter.

10.2 Oblique Projection

Oblique Projection of an object may be obtained by projecting the object with parallel projections that are oblique to the picture plane (Fig 10.1)

In oblique projection, the front face of the object appears in its true size and shape, as it is placed parallel to the picture plane. The receding lines representing the other two faces are usually drawn at 30^0, 45^0 or 60^0 to the horizontal, 45^0 being the most common practice.

As in the case of isometric projection, in oblique projection also, all lines that are parallel on the object appear parallel on the drawing and vertical lines on the object appear vertical.

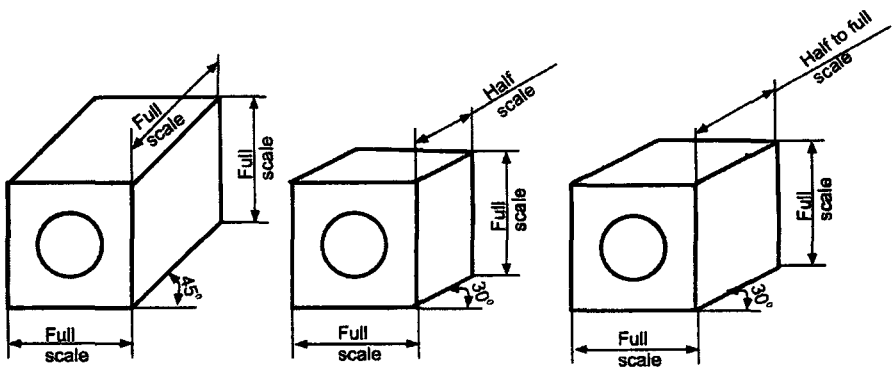

Fig. 10.1

10.3 Classification of Oblique Projection

Oblique projections are classified as cavalier, cabinet and general, depending on the scale of measurement followed along the receding lines, as shown in Fig 10.1. The oblique projection shown in Fig 10.1a presents a distorted appearance to the eye. To reduce the amount of distortion and to have a more realistic appearance, the length of the receding lines are reduced as shown, either in Fig. 10.1b or as in Fig 10.1c. If the receding lines are measured to the true size, the projection is known as cavalier projection. If they are reduced to one half of their true lengths, the projection is called cabinet projection. In general oblique, the measurement along the receding lines vary from half to full size.

Note: Oblique projection has the following advantages over isometric drawing:

1. Circular or irregular features on the front face appear in their true shape.
2. Distortion may be reduced by fore-shortening the measurement along the receding axis, and.
3. A greater choice is permitted in the selection of the position of the axes.

10.4 Methods of Drawing Oblique Projection

The orthographic views of a V-block are shown in Fig. 10.2a. The stages in obtaining the oblique projection of the same are shown in Fig. 10.2b.

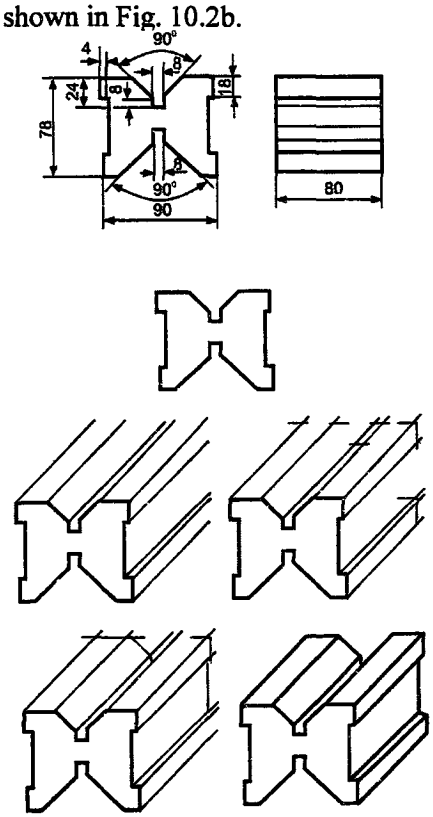

Fig. 10.2

1. After studying the views carefully, select the face that is either the most irregular one or the one with circular features if any. Make that face parallel to the picture plane to minimize distortion.
2. Draw the face to its true size and shape
3. Draw the receding lines through all the visible corners of the front face.
4. Mark the length of the object along the receding lines and join these in the order.
5. Add other features if any on the top and side faces.

10.4.1 Choice of Position of the Object

For selecting the position of an object for drawing the oblique projection, the rules below are followed.

1. Place the most irregular face or the one with circular features parallel to the picture plane. This, simplifies the construction and minimizes distortion.
2. Place the longest face parallel to the picture plane. This results in a more realistic and pleasing appearance of the drawing (Fig. 10.3)

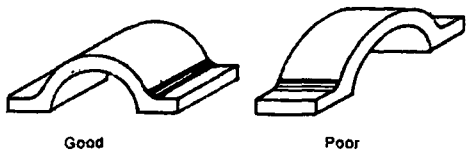

Fig. 10.3

10.4.2 Angles, Circles and Curves in Oblique Projection

As already mentioned, angles, circles and irregular curves on the surfaces, parallel to the picture plane, appear in true size and shape. However, When they are located on receding faces, the construction methods, similar to isometric drawing may be followed.

For example, th e method of representing a circle on an oblique face may be carried out by off-set method and the four centre method cannot be used. In case of cabinet oblique, the method and the result is the same as that of isometric drawing, since the angle of the receding axis can be the same as that of isometric axis. Figure 10.4 shows circles of same size in both isometric and oblique projections using 45^0 for the receding axis for oblique projections.

Curved features of all sorts on the receding faces or inclined surfaces may be plotted either by the off-set or co-ordinate methods as shown Fig 10.5

Figuers 10.6 to 10.8 show some examples of oblique projections.

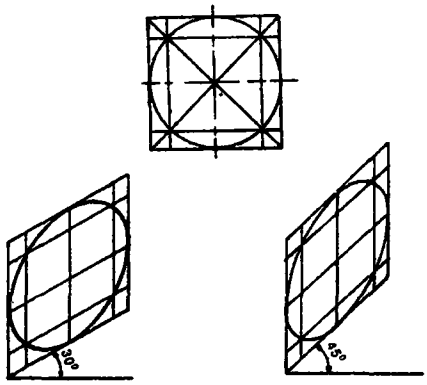

Fig. 10.4

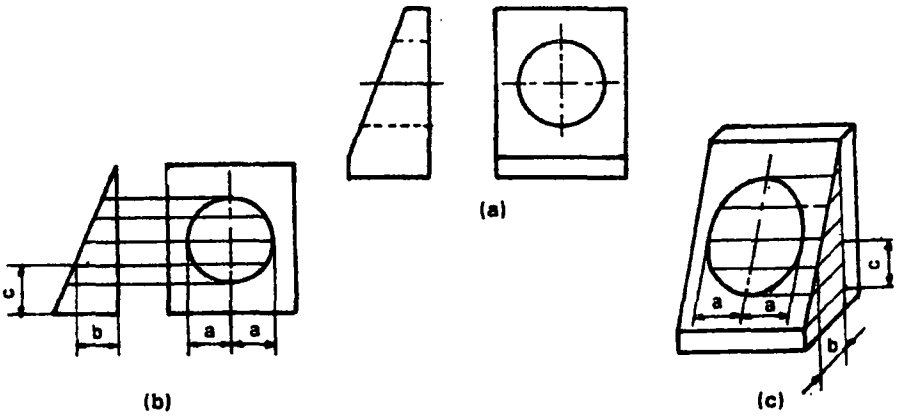

Fig. 10.5

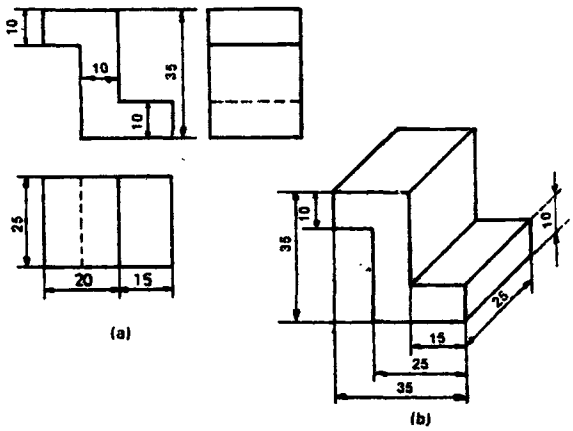

Fig. 10.6

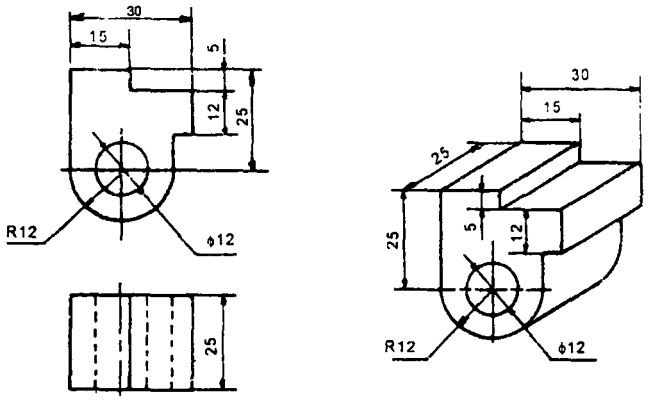

Fig. 10.7

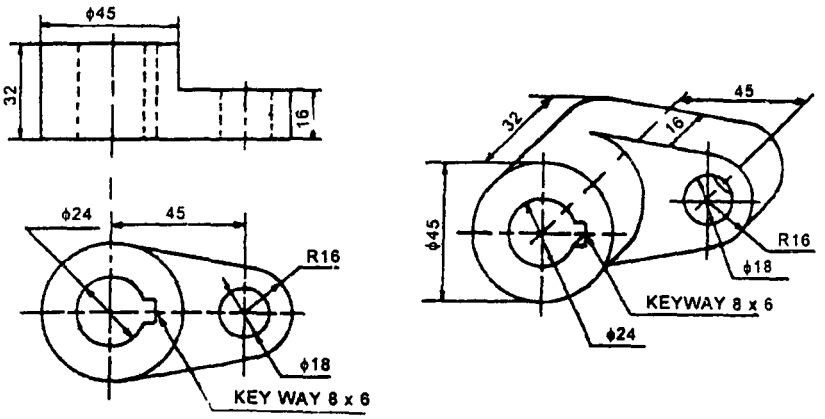

Fig. 10.8

10.5 Perspective Projection

Perspective projection is a method of graphic representation of an object on a single plane called picture plane as seen by an observer stationed at a particular position relative to the object. As the object is placed behind the picture plane and the observer is stationed in front of the picture plane, visual rays from the eye of the observer to the object are cut by the picture plane. The visual rays locate the position of the object on the picture plane. This type of projection is called perspective projection. This is also known as scenographic projection or convergent projection.

Method of preparing a perspective view differs from the various other methods of projections discussed earlier. Here, the projectors or visual rays intersect at a common point known as station point. A perspective projection of a street with posts holding lights, as viewed by an observer from a station point, is shown in Fig. 10.9. The observer sees the object through a transparent vertical plane called picture plane as shown in Fig.10.9(a). The view obtained on the picture plane is shown

in Fig. 10.9(b). In this view, the true shape and size of the street will not be seen as the object is viewed from a station point to which the visual rays converge. This method of projection is theoretically very similar to the optical system in photography and is extensively employed by architects to show the appearance of a building or by artist-draftman in the preparation of illustrations of huge machinery or equipment.

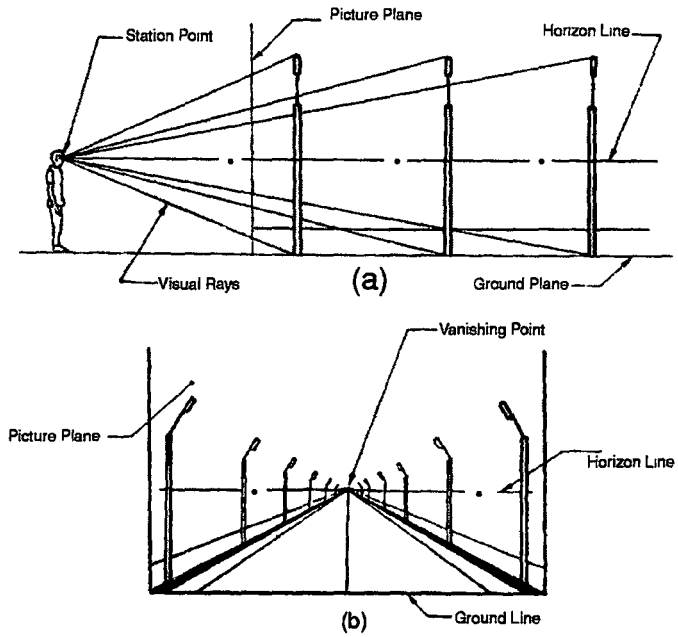

Fig. 10.9 Perspective view of a street

10.5.1 Nomenclature of Perspective Projection

The elements of perspective projection are shown in Fig. 10.10. The important terms used in the perspective projections are defined below.

1. Ground Plane (G.P.): This is the plane on which the object is assumed to be placed.
2. Auxiliary Ground Plane (A.G.P): This is any plane parallel to the ground plane (Not shown in Fig. 10.10)
3. Station Point (S.P.): This is the position of the observer's eye from where the object is viewed.
4. Picture Plane (P.P.): This is the transparent vertical plane positioned in between the station point and the object to be viewed. Perspective view is formed on this vertical plane.
5. Ground Line (G.L.): This is the line of intersection of the picture plane with the ground plane.
6. Auxiliary Ground Line (A.G.L.): This is the line of intersection of the picture plane with the auxiliary ground plane.

7. Horizon Plane (H.P.): This is the imaginary horizontal plane perpendicular to the picture plane and passing through the station point. This plane lies at the level of the observer.
8. Horizon Line (H.L.): This is the line of intersection of the horizon plane with the picture plane. This plane is parallel to the ground line.

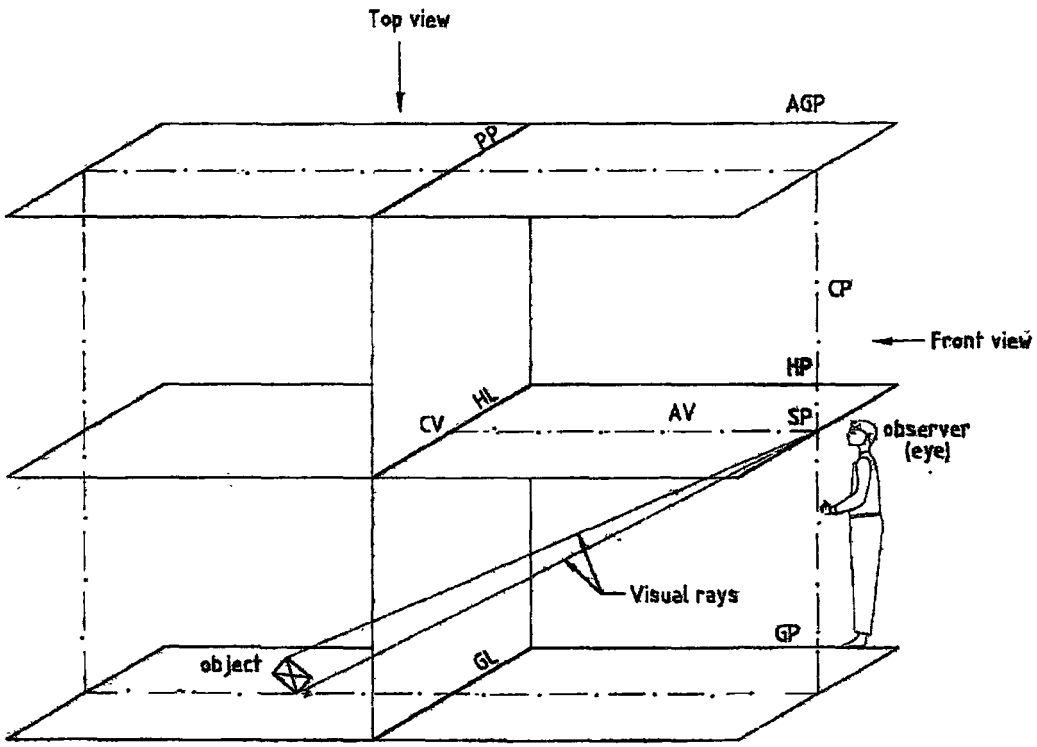

Fig. 10.10 Elements of perspective view

9. Axis of Vision (A.V.): This is the line drawn perpendicular to the picture plane and passing through the station point. The axis of vision is also called the line of sight or perpendicular axis.
10. Centre of Vision (C.V.): This is the point through which the axis of vision pierces the picture plane. This is also the point of intersection of horizon line with the axis of vision.
11. Central Plane (C.P.): This is the imaginary plane perpendicular to both the ground plane and the picture plane. It passes through the centre of vision and the station point while containing the axis of vision.
12. Visual Rays (V.R.): These are imaginary lines or projectors joining the station point to the various points on the object. These rays converge to a point.

10.5.2 Classification of perspective projections

Perspective projections can be broadly classified into three categories.

1. Parallel perspective or single point perspective.
2. Angular perspective or two point perspective.
3. Oblique perspective or three point perspective.

These perspective projections are based on the relative positions of the object with respect to the picture plane. All the three types of perspectives are shown in Fig. 10.11.

Parallel perspective or single point perspective

If the principal face of the object viewed, is parallel to the picture plane, the perspective view formed is called parallel perspective. Such a perspective view is shown in Fig. 10.11(a). In parallel perspective views, the horizontal lines receding the object converge to a single point called vanishing point (V.P.). But the vertical and horizontal lines on the principal face and the other faces of the object, do not converge, if these lines are parallel to the picture plane. Because the lines on the faces parallel to the picture plane do not converge to a point and the horizontal lines receding the object converge to a single vanishing point, the perspective projection obtained is called parallel or single point perspective. Single point perspective projection is generally used to present the interior details of a room, interior features of various components, etc.

Angular perspective or two-point perspective

If the two principal faces of the object viewed are inclined to the picture plane, the perspective view formed is called angular perspective. Such a perspective is shown in Fig. 10.11(b). In angular perspective views, all the horizontal lines converge to two different points called vanishing point left (V.P.L.) and vanishing point right (V.P.R.). But the vertical lines remain vertical. Because the two principal faces are inclined to picture plane and all the horizontal lines on the object converge to two different vanishing points, the perspective view obtained is called angular or two point perspective. Two point perspective projection is the most generally used to present the pictorial views of long and wide objects like buildings, structures, machines, etc.

Oblique perspective or three point perspective

If all the three mutually perpendicular principal faces of the object viewed, are inclined to the picture plane, the perspective view formed is called oblique perspective. Such a perspective view is shown in Fig. 10.11(c). In oblique perspective views, all the horizontal lines converge to two different points called vanishing point left (V.P.L.) and vanishing point right (V.P.R.) and all the vertical lines converge to a third vanishing point located either above or below the horizon line. Because all the three principal faces are inclined to the picture plane and all the horizontal and the vertical lines on the object converge to three different vanishing points, the perspective view obtained is called oblique or three point perspective.

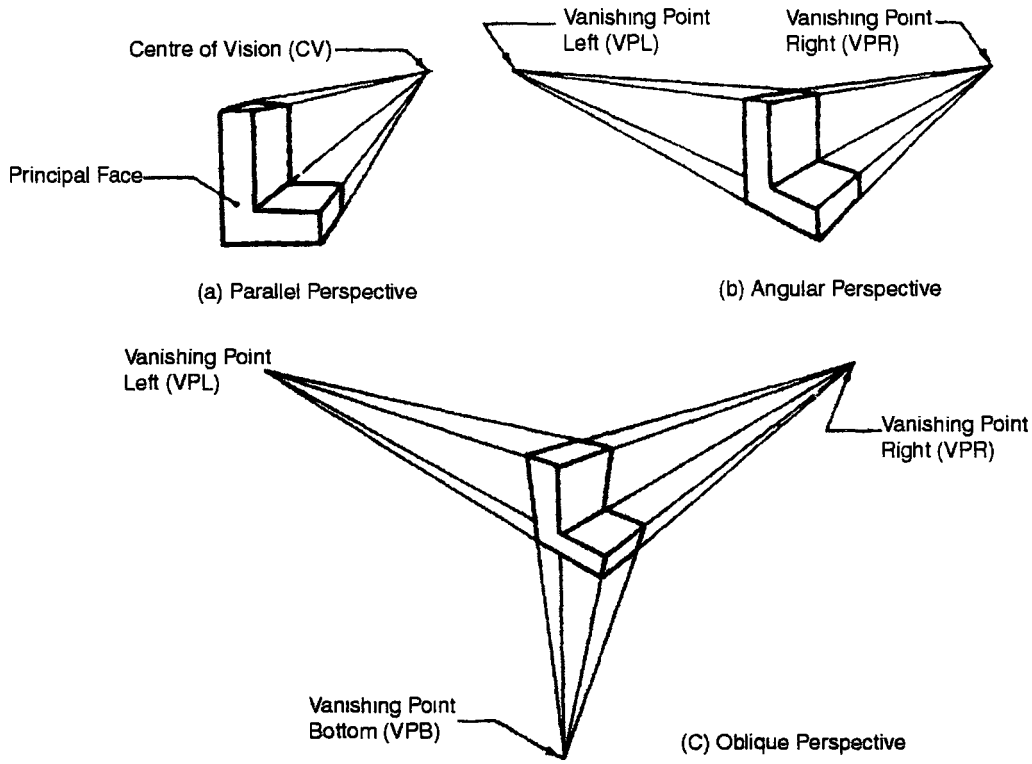

Fig. 10.11 Classification of perspective projections

Three point perspective projection may be used to draw pictorial views of huge and tall objects like tall buildings, towers, structures, etc. If the station point is near by the ground plane, the vertical lines will vanish at a point above the horizon line. If the station point is located above the object, all the vertical lines will vanish at a point below the horizon line. Oblique perspective projection is seldom used in practice.

Orthographic Representation of Perspective Elements

Figure. 10.12 shows orthographic views of the perspective elements in Third Angle Projection.

Top View: GP, HP and AGP will be rectangles, but are not shown. PP is seen as a horizontal line. Object is above PP. Top view SP of station point is below PP. Top view of center of vision is CV Line CV-SP represents the Perpendicular Axis CP

Front View: It shows GL and HL representing GP and HP respectively. CV, SP coincide each other on HL.CP is seen as a vertical line through SP^1. PP will be seen as a rectangle, but is not shown.

Perspective projection, when drawn, will be seen above / around GL. Mark any convenient distance between PP and GL, i.e., greater than (x + y) as shown.

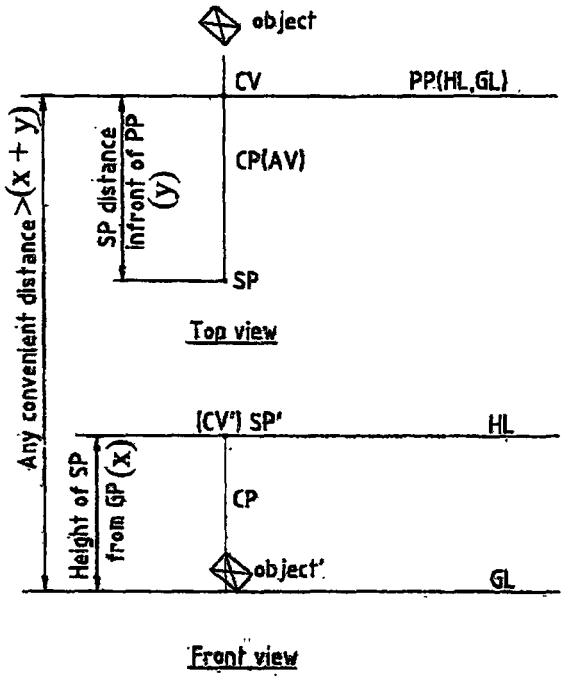

Fig. 10.12 Orthographic representation

10.5.3 Methods of Perspective Projection

Visual Ray Method

In this method, points on the perspective projection are obtained by drawing visual rays from SP to both top view and either front view or side view of the object. Top and side views are drawn in Third Angle Projection.

Perspective projection of a line is drawn by first marking the perspective projection of its ends (which are points) and then joining them. Perspective projection of a solid is drawn by first obtaining the perspective projection of each corner and then joining them in correct sequence.

Vanishing Point Method

Vanishing Point: It is an imaginary point infinite distance away from the station point. The point at which the visual ray from the eye to that infinitely distant vanishing point pierces the picture plane is termed as the Vanishing Point.

When the observer views an object, all its parallel edges converge to one/two/three points depending on the locations of the object and the observer.

Perspective Projection of Points

Problem 1: (Fig. 10.13)

Draw the perspective projection of a point. A situated 20 mm behind the picture plane and 15 mm above the ground plane. The station point is 30 mm in front of the picture plane, 40 mm above the ground plane and lies in a central plane which is 35 mm to the left of the given pint.

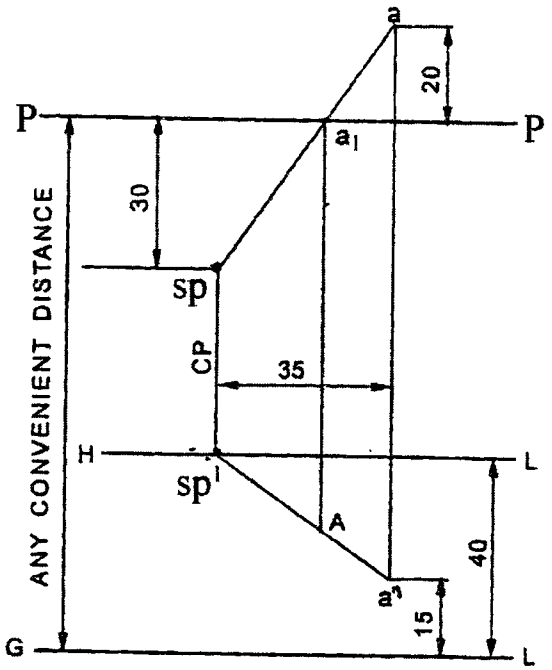

Fig. 10.13

Visual Ray Method

Top view

1. Draw a horizontal line pp to represent the top view of the picture plane.
2. The point A is 20 mm behind PP. Hence mark a 20 mm above PP.
3. Station point SP lies in a central plane CP which is 35 mm to the left of point A. Therefore, draw a vertical line to represent the top of CP at 35 mm to the left of a.
4. SP is 30 mm in front of PP. Therefore on CP, mark sp 30mm below PP.
5. Join a and sp to represent the top view of the visual ray. It pierces the PP at A,

Front view

6. Draw a horizontal line GL at any convenient distance below PP to represent the ground line.
7. To avoid over lap of visual rays and get a clear perspective, select GL such that HL lies below sp^1

8. sp^1 is 40 mm above GP. Therefore draw HL 40 mm above GL.
9. Further CP also represents front view of the CP. Hence mark sp^1 at the intersection of CP with HL.
10. Join a^1 sp^1, the front view of the visual ray.
11. From the piercing point a_1 erect vertical to intersect a^1 sp^1 point A, which is the required perspective projection.

Perspective Projection of Straight Lines

In Visual Ray Method, perspective projection of a straight line is drawn by first marking the perspectives of its end points and then joining them.

Problem 2: (Fig 10.14)

Draw the perspective projection of a straight line AB, 60mm long, parallel to and 10 mm above the ground plane and inclined at 45° to PP. The end A is 20 mm behind the picture plane. Station point is 35 mm in front of the picture plane and 45mm above the ground plane and lies in a central plane passing through the mid-point of AB.

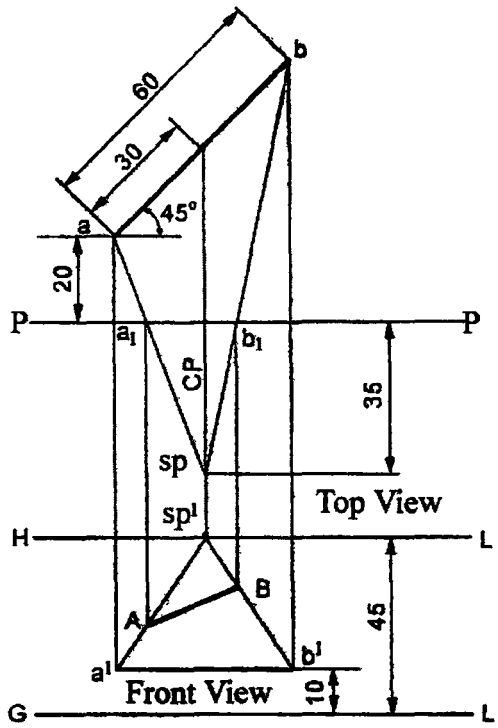

Fig. 10.14

Top View

1. Draw PP and mark a 20 mm above it.
2. Draw ab = 60 mm (True length of AB) inclined at 45° to PP
3. From the mid-point of ab erect a vertical line to represent the CP.
4. Along the central plane mark sp 35 mm below pp.
5. Join an and b with sp to represent the top view of the visual rays.
6. Mark the piercing points a and b on asp and bsp respectively.

Front View

7. Draw GL at any convenient distance below PP.
8. Draw a^1 b^1 parallel to and 10 mm above GL.
9. Draw HL 45 mm above GL.
10. Mark sp^1 at the intersection of CP & HL.
11. Join SP^1 with a^1 and b^1,
12. From a_1 and b_1 (piercing points) erect verticals to intersect sp^1 a^1 and sp^1 b^1 (the front view of the visual rays) at A and B respectively.
13. AB is the required perspective projection.

Perspective Projection of Plane Figures

Problem 3: (Fig. 10.15)

A square lamina of 30 mm side lies on the ground plane. One of its corners is touching the PP and edge is inclined at 60° to PP. The station point is 30 mm in front of PP, 45 mm above GP and lies in a central plane which is at a distance of 30 mm to the right of the corner touching the PP.

Draw the perspective projection of the lamina.

Visual Ray Method: (Fig. 10.15a)

Top View

1. Draw the top view of the lamina as a square of 30 mm side that the corner b is touching PP and the edge bc inclined at 60° to PP.
2. Draw CP, 30 mm from b on right side. Along CP mark sp 30 mm below PP.
3. Join sp with all the four corners of the square lamina in the top view.
4. Obtain the corresponding pierrcing points on PP.

Front View

5. Draw GL and obtain the front view of the lamina on it ($a^1d^1b^1c^1$).
6. Draw HL 45 mm above GL and obtain sp^1 on it.
7. Joint sp^1 with all the corners of the lamina in the front view.

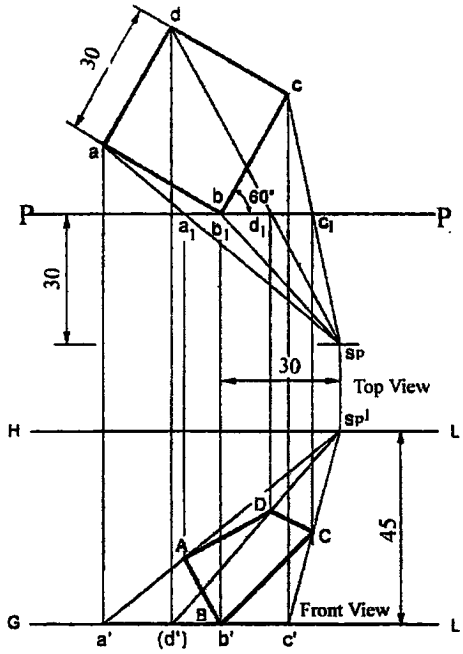

Fig. 10.15(a) Visual ray method

Perspective Projection

8. Since the corner b touches the picture plane, its perspective will be in its true position.
9. Since the lamina lies on the ground plane, b^1 is on GL and is also the perspective projection of B.
10. From a_1 draw vertical to intersect a^1 sp^1 at A.
11. Similarly obtain B, C and D.
12. Joint ABCD and complete the perspective projection.

Vanishing Point Method (Fig. 10.15b)

1. Draw the top view as explanted in Steps 1 to 4 in the above method.
2. Draw GL and HL as shown.

Vanishing Points

3. From sp draw a line parallel to bc to intersect PP at VR
4. Erect vertical from VR to intersect HL at vanishing point VR^1
5. Similarly from sp draw a line parallel to ba to cut PP at VL.
6. Erect vertical from VL and obtain the other vanishing point VL^1 on HL.

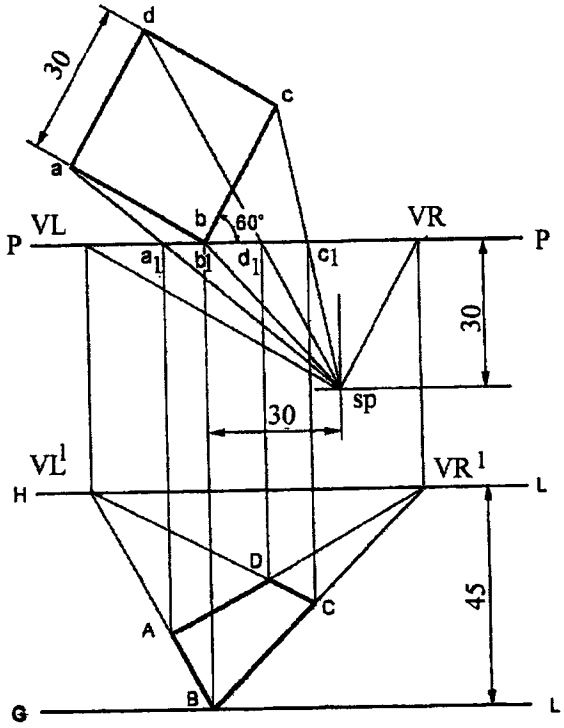

Fig. 10.15 (b) Vanshing point method

Perspective Projection

7. Since b touches PP, draw a vertical line from b and obtain B on GL.
8. Join B with VR^1 and VL^1

Note: The perspective projection of any point lying on bc will be on BVR^1 and any point on ba will be on BVL^1.

9. Hence from c_1 erect a vertical line to intersect BVR^1 at C.
10. Similarly from a_1 erect a vertical line and obtain A on BVL^1.
11. Joint A with VR^1.
12. Since ad is parallel to bc, the perspective projection of any point lying on ad will lie on AVR^1. Therefore from d_1 erect a vertical to meet AVR^1 at D.
13. Note that when C and VL^1 are joined, D will also lie on CVL^1.
14. Joint ABCD and complete the perspective.

Problem 4: (Figure 10.16)

A pentagonal lamina of 40 mm side lies on the ground. The corner which is nearest to PP is 15 mm behind it and an edge containing that corner is making 45⁰ with PP. The station point

is 40 mm in front of PP, 50 mm above GP and lies in a central plane which is at a distance of 70 mm to the left of the corner nearest to the PP.

Draw the perspective projection of the lamina.

Perspective projection is drawn by Visual Ray Method using top and front views

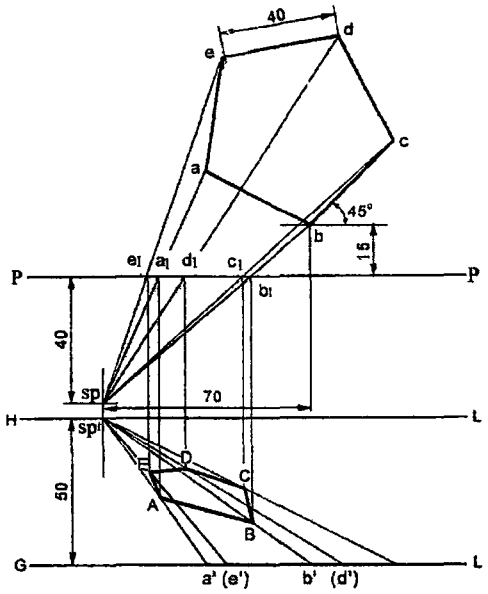

Fig. 10.16 Visual ray method

Perspective Projection of Solds

Problem 5: (Fig 10.17)

A square prism, side of base 40 mm and height 60 mm rests with its base on the ground such that one of its rectangular faces is parallel to and 10 mm behind the picture plane. The station point is 30 mm in front of PP, 88 mm above the ground plane and lies in a central plane 45 mm to the right of the centre of the prism.

Draw the perspective projection of the square prism.

Visual Ray Method (Fig. 10.17)

Top View

1. Draw the top view of the prism as a square of side 40 mm such that ab is parallel to and 10 mm above PP.
2. Locate sp and draw the top view of the visual rays.
3. Mark the piercing points.

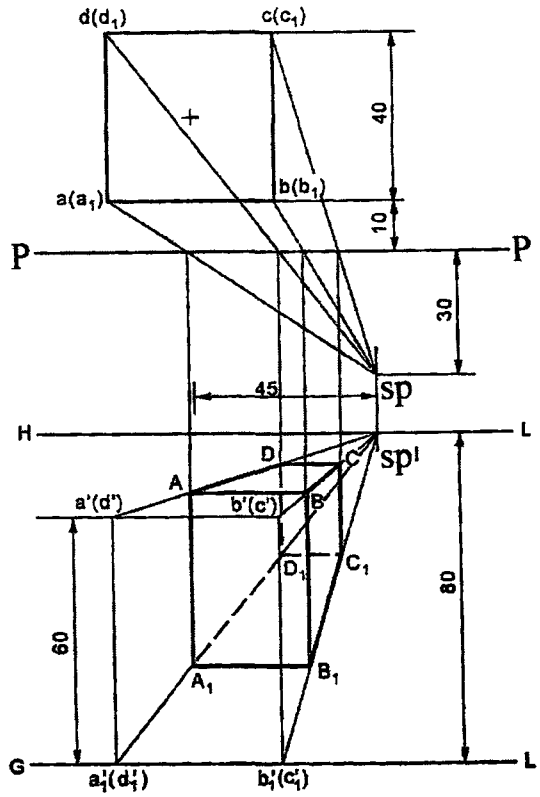

Fig. 10.17 Visual ray method

Front View

4. Draw front view of the prism for given position.
5. Locate sp' and draw front view of the visual rays.
6. From piercing points erect vertical lines to cut the corresponding visual rays in the front view. Thus obtain all corners in the perspective projection.

To mark the visible and invisible edges in the perspective

7. Draw the boundary lines as thick lines.
8. The faces ab (b_1) (a_1) and bc (c_1) (b_1) are nearer to s and visible. Hence draw BB_1, BA and BC as thick lines.
9. Edge d(d_1) is farther away from sp. Hence draw DD_1, D_1A_1 and D_1C_1 as dashed lines.

Problem 6 : *A square prism 30 mm side and 50 mm long is lying on the ground plane on one of its rectangular faces in such a way that one of its square faces is parallel to 10mm behind the picture plane. The station point is located 50 mm in front of the picture plane and 40mm above the ground plane. The central plane is 45mm away from the axis of the prism towards the left. Draw the perspective view of the prism.*

The perspective view shown in Fig. 10.18 is developed from the top and front views.

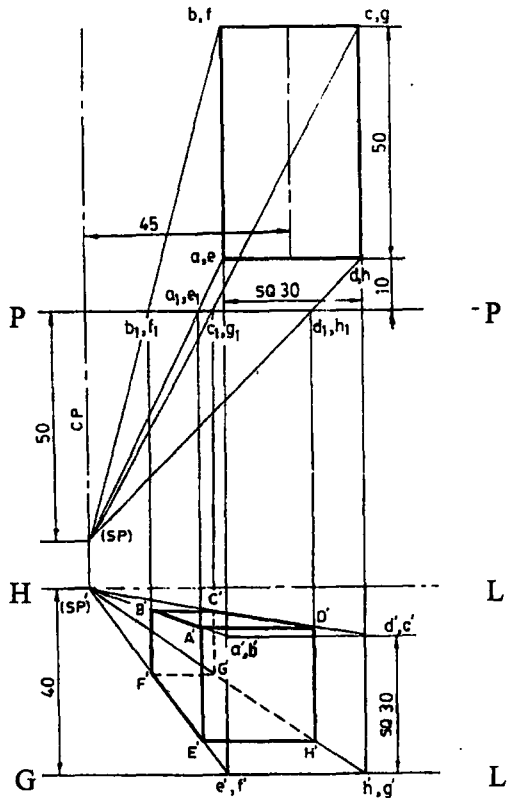

Fig. 10.18 Visual ray method of parallel perspective (from the top and front views)

1. Draw the top view of the picture plane (P.P.) and mark the ground line (G.L.) at a convenient distance from the line P.P. Draw the horizon line (H.L.) at a distance of 40mm above the G.L.
2. Draw the top view of the square prism keeping the face adhe parallel to and 10mm behind the P.P. Mark the central plane (C.P.) 45 mm away from the asix of the prism towards the left side. Locate the top view of the station point (S.P.) at a distance of 50mm infornt of the P.P. and on C.P. Also mark the front view of the station point (S.P.) on the H.L.
3. Draw visual rays from (S.P.) to the various corners of the top view of the prism, piercing the P.P. at a_1, b_1, c_1, etc
4. Draw the front view of the prism a`d`h`e` on the G.L. and visual rays (V.R.) from (S.P.)` to all corners of the front view.
5. Draw vertical lines from the points a1,b1,c1, etc. to intersect the corresponding visual rays drawn from a`,b`,c`, etc. from the front view to get the points A`B`C`, etc. Join the points to get the required perspective.

Note: If the hidden edges are to be shown, they should be represented by short dashes. In the figure, F`G`, C`G` and G`H` are hidden. If square faces of an object are parallel to P.P., in the perspective view these square faces will also be square but of reduced dimensions.

Problem 7: (Fig. 10.18)

A square pyramid of base edge 40 mm and altitude 50 mm, rests with its base on the ground plane such that all the edges of the base are equally inclined to the PP. One of the corners of the base is touching the PP. The station point is 60 mm in front of the PP, 80 mm above the ground plane and lies in a central plane which passes through the axis of the pyramid.

Draw the perspective projection.

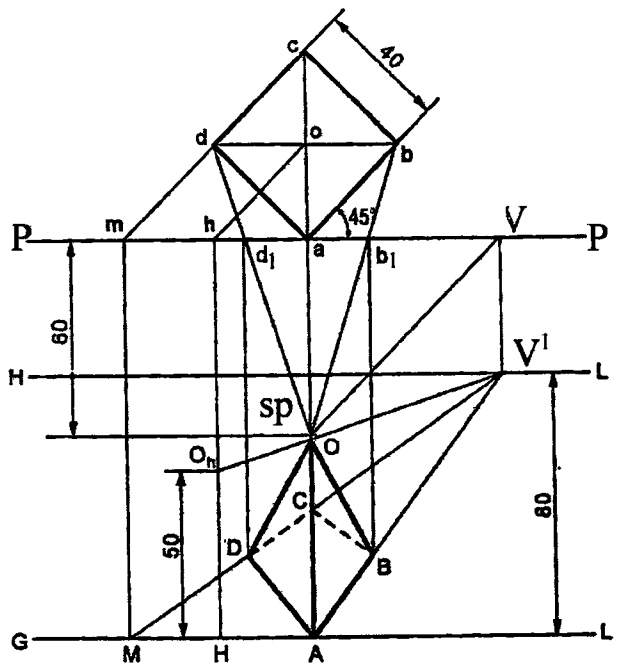

Fig. 10.18 Vanishing point method

Vanishing Pont Method

1. Draw the top view of the square pyramid and the visual rays.
2. From sp draw a line parallel to ab.
3. Obtain the vanishing point V on HL.

To obtain the perspective projection

4. Corner A is touching the PP and on the ground. Hence erect a vertical line from a and mark the perspective of A on GL.
5. Join A with V.

6. As edge AB is on the ground, obtain the perspective of B on AV.
7. To obtain the perspective of D of C extend cd to meet PP at m.
8. Draw the measuring line Mm.
9. Since the edge DC is on the ground, joint M with V.
10. Obtain the perspective of D and C on this line MV.
11. To mark the perspective of apex O, draw a line parallel to ab and passing through o to meet the picture plane at h.
12. Draw another measuring line Hh.
13. On this line mark the height of the apex as OhH=50 mm.
14. Join Oh with V.
15. Obtain the perspective of O on this line.
16. Then complete the perspective as shown.

Problem 8: Figure 10.19(a) gives an isometric view of an object. Draw its parallel perspective following the visual ray method. The object is viewed from a point at a distance of 70mm from the front face F which is on the picture plane. Also, the viewing point is 40 mm above the plane on which the object is placed and the central plane is located at a distance of 80mm towards the right side of the object.

Solution: (Fig 10.19)

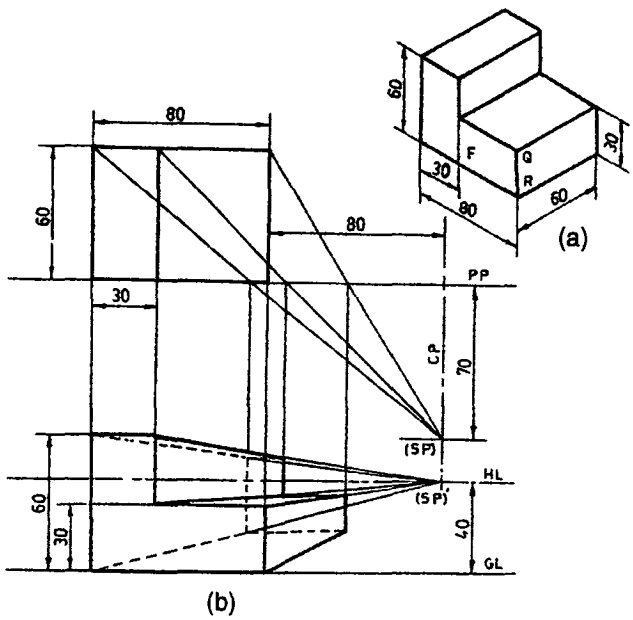

Fig. 10.19 Visual ray method of parallel perspective (from top and front views)

As the face F is on the P.P., the front view and perspective view of the face F will coincide. Following the procedure explained in the problem 6 the perspective views of the object is drawn and it is shown in Fig. 10.19.

Problem : 9

Fig. 10.20(a) shows isometric view of an object. Draw the angular perspective of it when the object is resting on the ground plane keeping the face F inclined 30° to and the edge QR 20mm behind the picture plane. The station point is 120 mm in front of the picture plane, 80mm above the ground plane and lies in the central plane which passes through the edge QR.

Solution: (Fig 10.20)

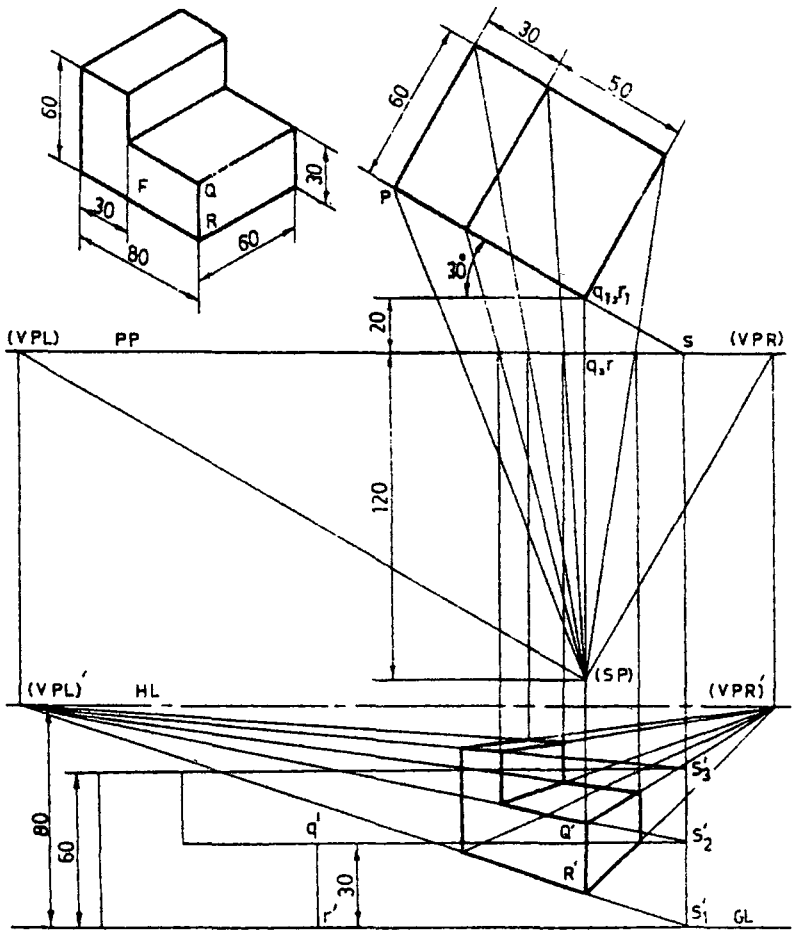

Fig. 10.20 Vanishing point method of angular perspective.

EXERCISES

1. A point P is situated 15 mm behind the picture plane and 10 mm above the ground plane. The station point is 25 mm in front of the picture plane, 20 mm above the ground plane and lies in a central plane 10 mm to the right of the point. Draw the perspective projection of the point P.
2. A straight line AB 60 mm long haw has its end A 15 mm above GP and 25 mm behind PP. It is kept inclined 35^0 to PP and parallel to GP. The station point in 70 mm in front of PP and 50 mm above GP and lies in the central plane which passes through the mid point of the line AB. Draw the perspective projection of the line.
3. Draw the top view of the object, station point (S.P.) and the vanishing points (V.P.R.) and (V.P.L.) on the picture plane (P.P.) Draw the ground line (G.L.) and the horizon line (H.L.) Mark the front views of the vanishing points (V.P.R.) and (V.P.L.) on H.L. as shown in Fig. 10.15.
4. As the object is placed behind P.P., in the perspective view no edge of the object will have true size. To obtain the reduced size, extend the plane containing any one of the principal faces to the P.P. In the top view, the face F is represented by the line pq. Extend pq to intersect the P.P. at s, the piercing point. Draw a vertical line from s to meet the G.L. at s^1_1. Mark true height of the object on this line.

   Points showing the true heights can be easily located by drawing horizontals from the front view drawn at a convenient place on G.L.
5. Join s^1_1 and s^1_2 with (V.P.L.)' Draw a vertical from q_1 to intersect the above lines at R^1 and Q^1 respectively. The line R'Q' represents the perspective view of the vertical edge QR. Proceed further as explained in the Figure 10.11 to obtain the required angular perspective view of the object.
6. A square lamina of 30 mm side rests on one of its sides on the ground touching the picture plane. The station point is 40 mm above the ground plane, 30 mm in front of picture plane and lies in a central plane 20 mm to the right of the center of the square. Draw the perspective projection of the square.
7. A circular lamina of diameters 50 mm in lying on the ground plane touching the picture plane. The station point is 50 mm above the ground plane, 60 mm in front the picture plane and contained in the central plane which passes at a distance of 40 mm from the central of the circle. Draw the perspective projection of the circle.
8. Draw the perspective projection of a rectangular block of 300 mm x 200 mm x 100 mm resting on a horizontal plane with one side of the rectangular plane making an angle 45^0 with VP. The observer is at a distance of 600 mm from the picture. Assume eye level as 100 mm.
9. A square prism of 30 cm side and 50 cm length is lying on the ground plane on one of its rectangular faces, in such a way that one of its square faces is parallel to an 10 cm behind the picture plane. The station point is located 60 cm in front of the picture plane and 40 cm above the ground plane. The central plane is 50 cm away from the axis of the prism towards the left. Draw the perspective projection of the prism.

10. A cube of edge 30 mm rests with one of the faces on the ground plane such that a vertical edge touches the picture plane. The vertical faces of the cube are equally inclined to the PP and behind it. A station point is 40 mm in front of the PP, 50 mm above the ground plane and lies in a central plane 15 mm to the right of the axis of the cube.Draw the perspective projection of the cube.
11. A rectangular pyramid, sides of base 55 mm x 20 mm and height 60 mm rests with its base on the ground plane such that one of the longer edges of the base is parallel to and 20 mm behind the picture plane. The station point is 40 mm in front of the picture plane, 60 mm above the ground plane and lies in a central plane which passes through the axis of the pyramid. Draw the perspective projection of the cube.

CHAPTER 11

Conversion of Isometric Views to Orthographic Views and Vice Versa

11.1 Introduction

The following principles of orthographic views are considered in making the above drawings :

1. In first angle projection; the **Front view** on the above and the **Top view** at the bottom are always in line vertically.
2. The **front view** and the **side view** are always in line horizontally.
3. Each view gives two dimensions; usually the front view gives lengh and height, top view gives length and width and side view gives hight and width.
4. When the surface is parallel to a plane its projection on that plane will show its true shape and size.
5. When the surface is inclined its projection will be foreshortened as shown.(Fig.11.1)

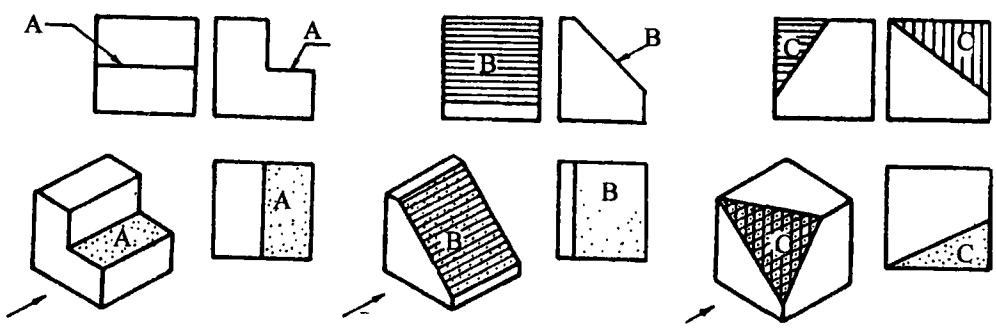

(a) - True Shaped Surface - A (b) - Foreshortened Surface - B (c) - Oblique Surface - C

Fig. 11.1 Representation of Surfaces

11.2 Selection of views

1. The number of orgthographic views required for clear description of the object is taken as the criteria to select the views. As far as possible least number of views are drawn.

2. While selecting the views; the object is placed in such a way the number of hidden lines are kept to minimum.
3. Front view is drawn seeing the object in a direction is which its length is seen. It is also chosen such that the shape of the object is revealed. The direction of the view is indicated by arrows.

Examples

The isometric views of some objects and their orthographic views are shown from Figure 11.2 to Fig.11.15 in the following pages drawn as per the principles indicated above.

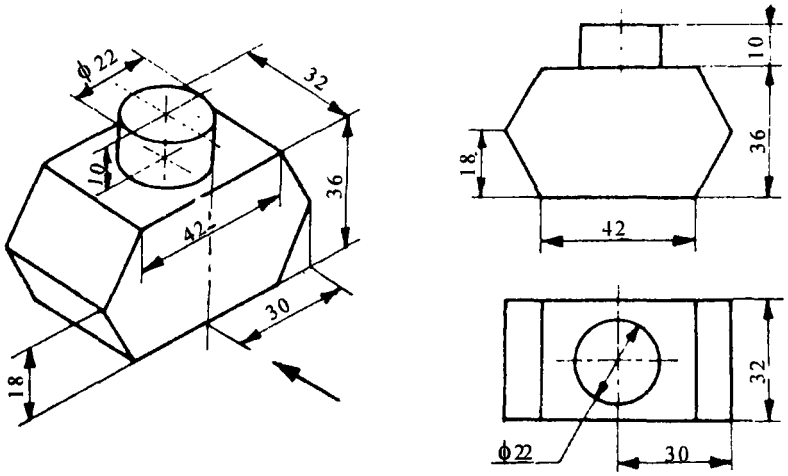

(a) (b)

Fig. 11.2

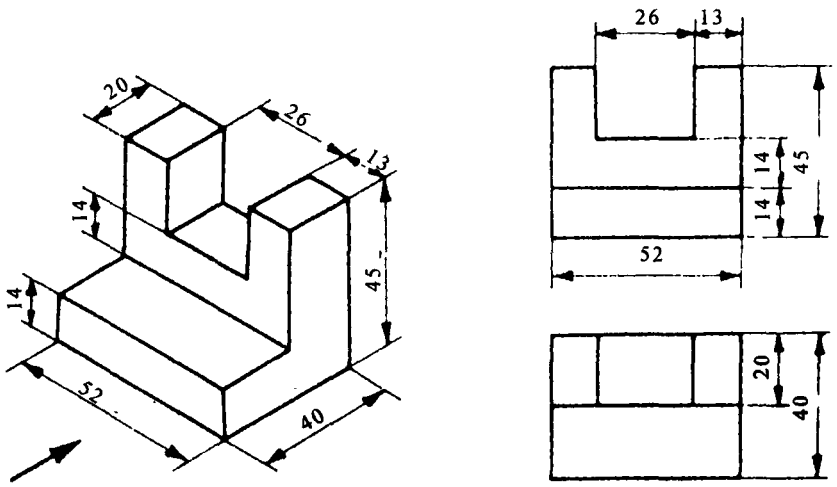

(a) (b)

Fig. 11.3

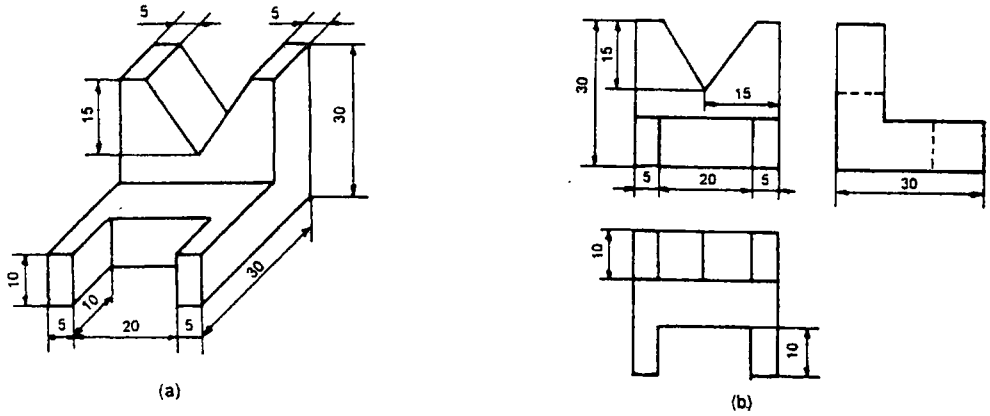

Fig. 11.4

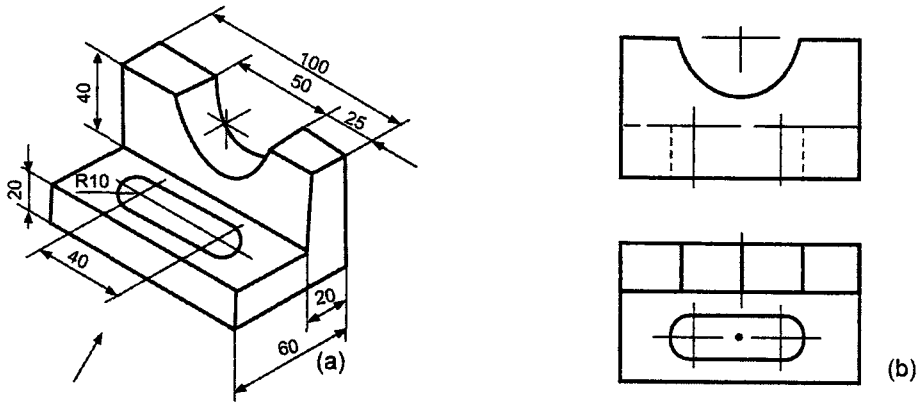

Fig. 11.5

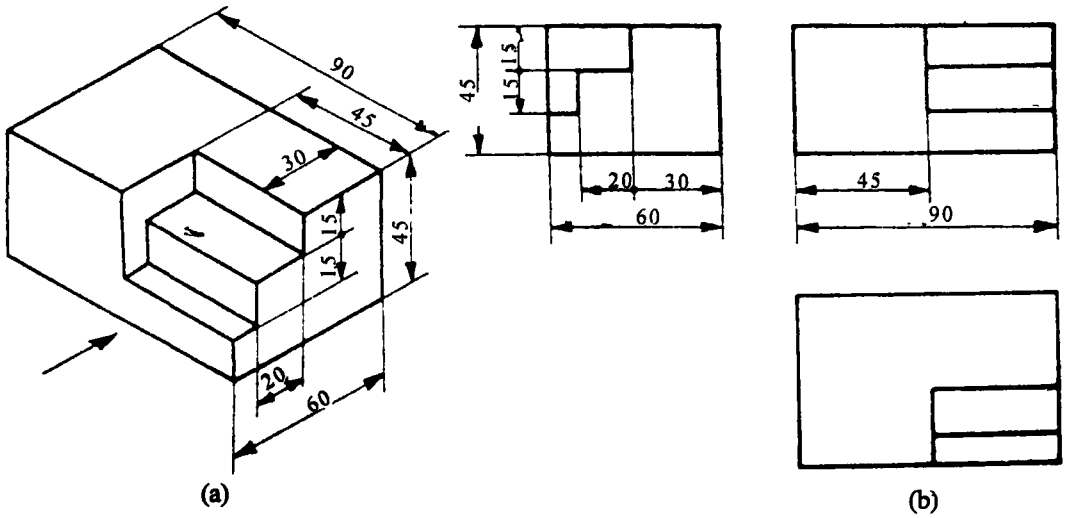

Fig. 11.6

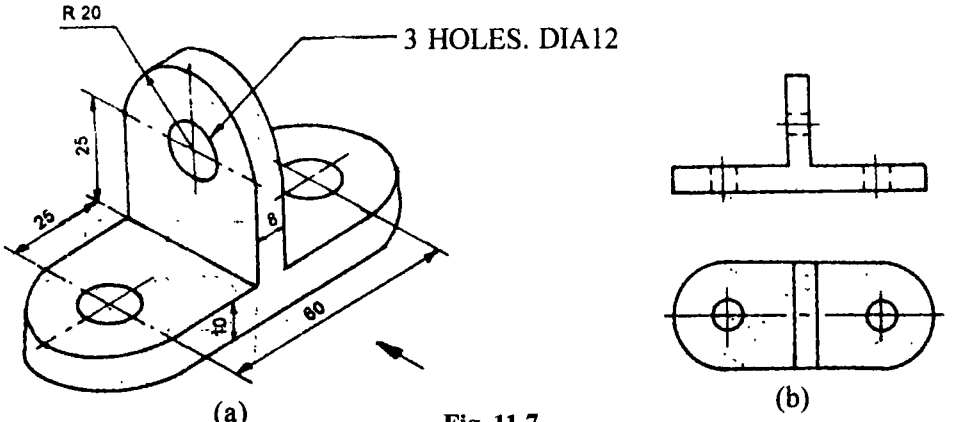

Fig. 11.7

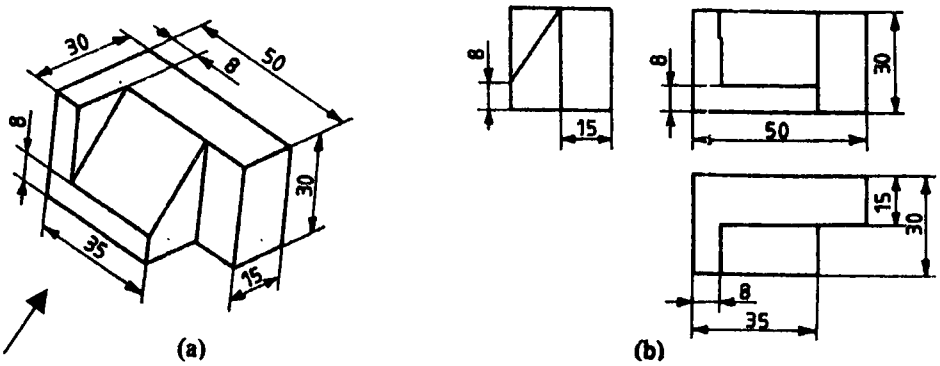

Fig. 11.8

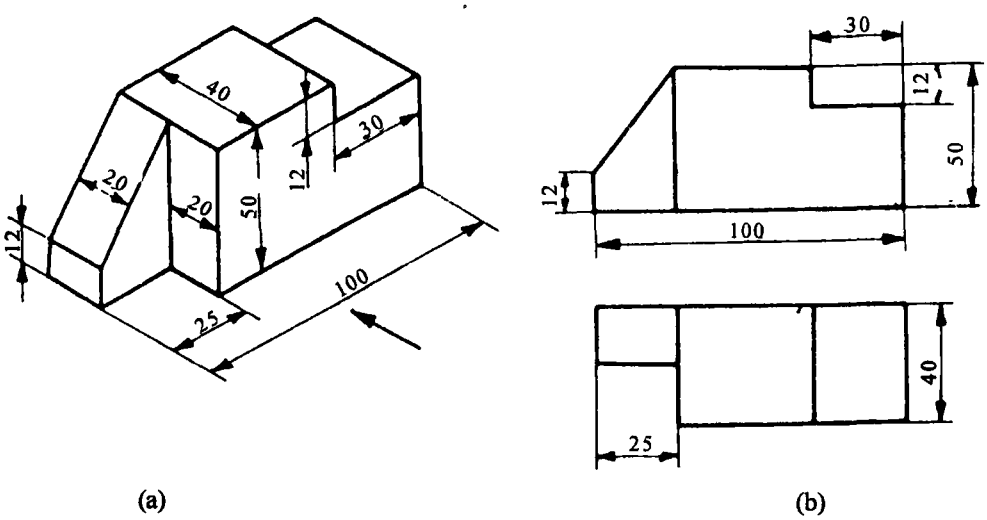

Fig. 11.9

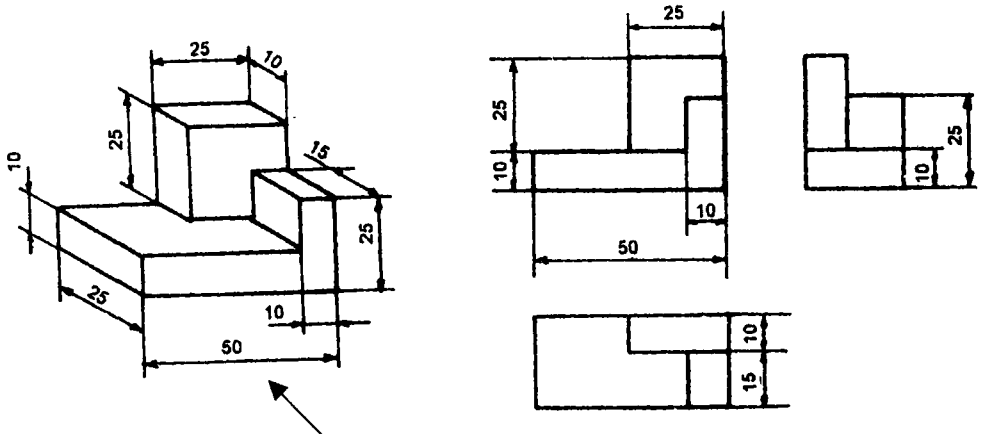

Fig. 11.10

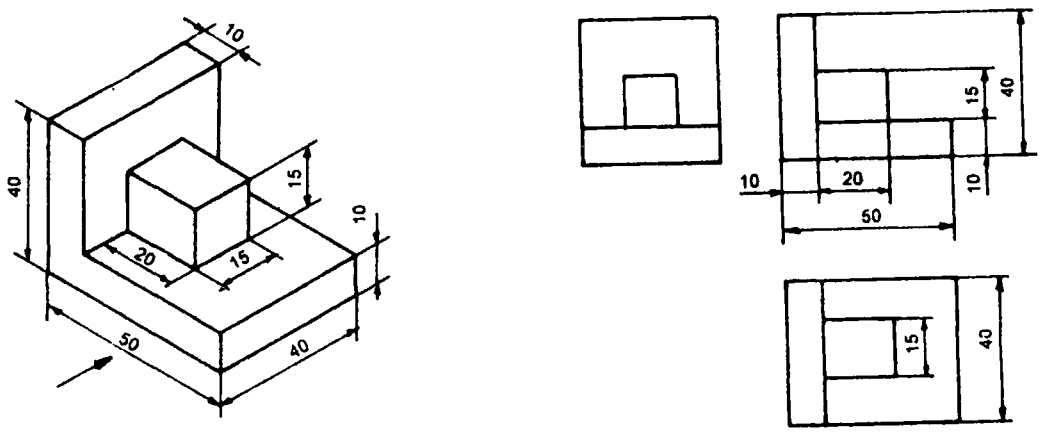

Fig. 11.11

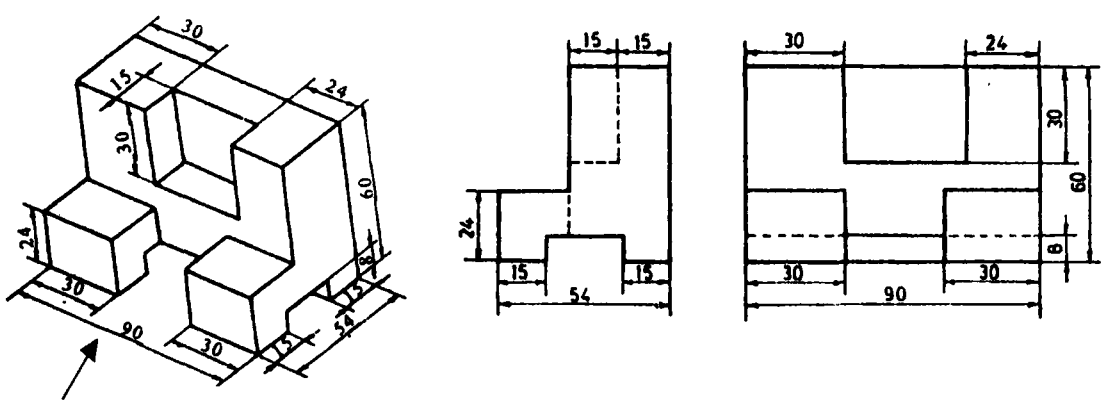

Fig. 11.12

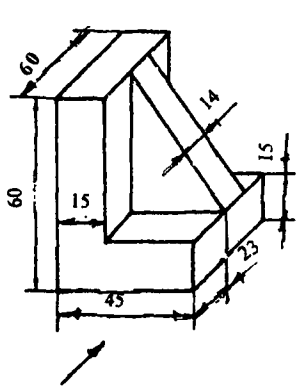

(a)

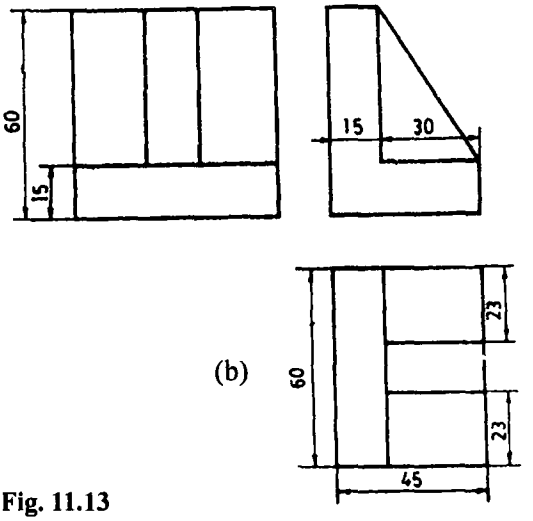

(b)

Fig. 11.13

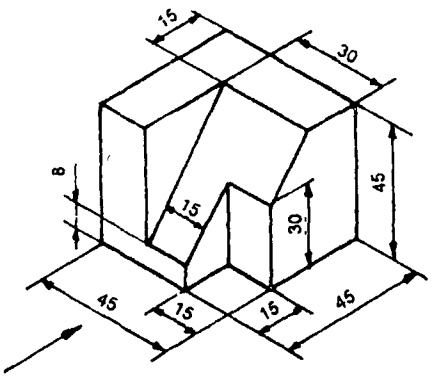

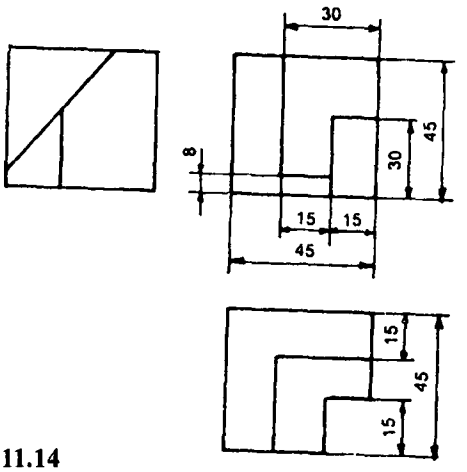

Fig. 11.14

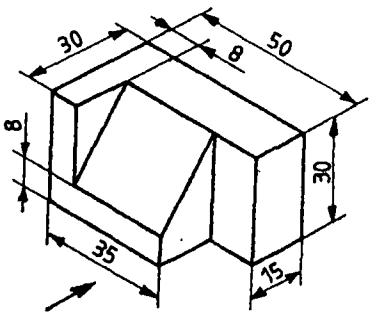

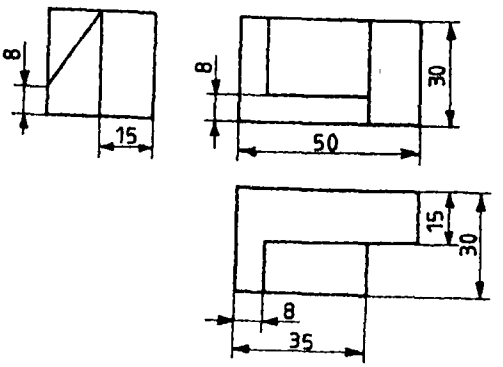

Fig. 11.15

11.3 Conversion of Orthographic Views to Isometric Views

Principles of conversion of orthographic views into isometric views are explained in chapter 7.

Examples

A few orthographic views and their isometric drawing are shown from Fig.11.16 to Fig.11.20.

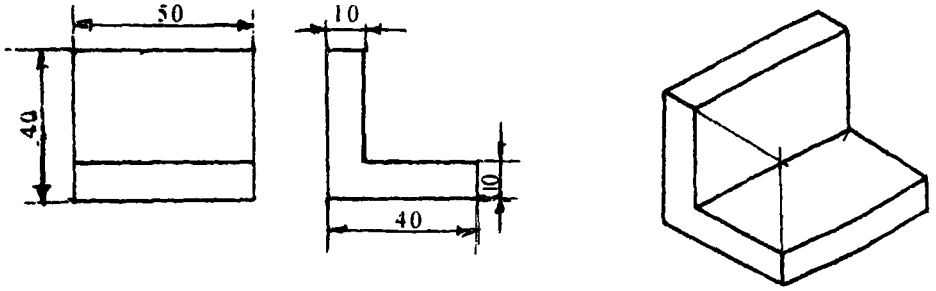

Fig. 11.16

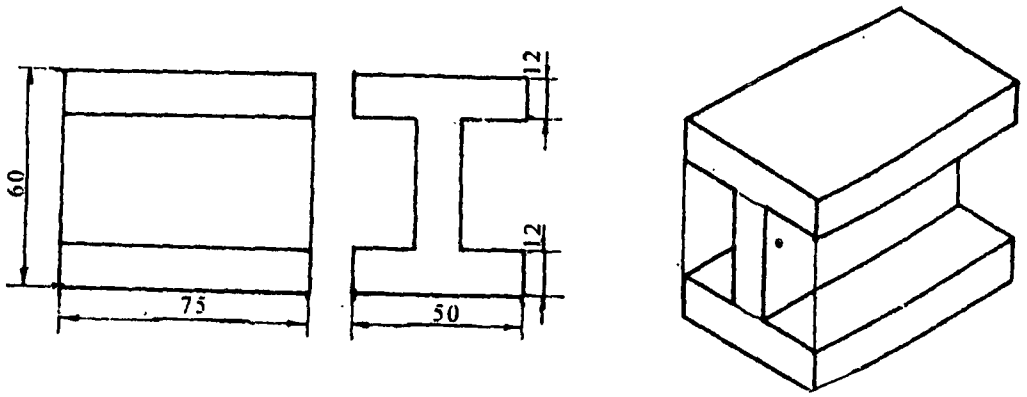

Fig. 11.17

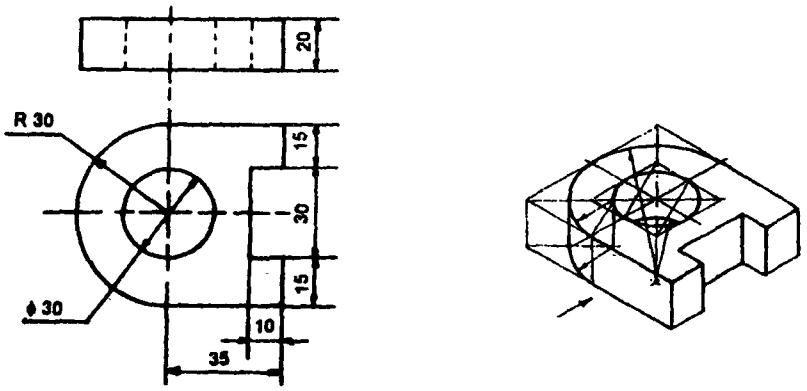

Fig. 11.18

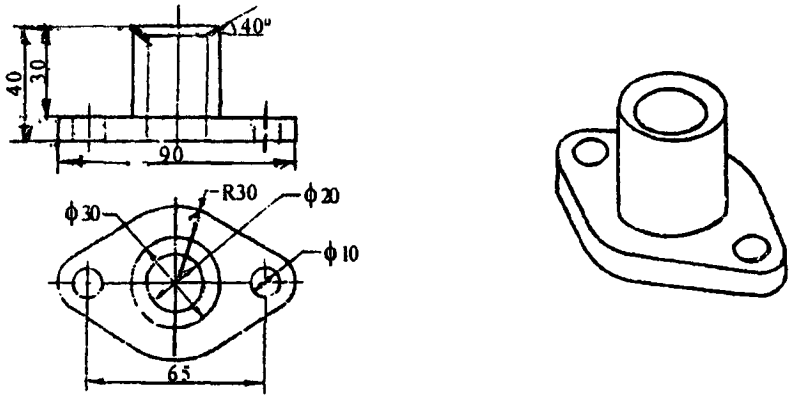

Fig. 11.19

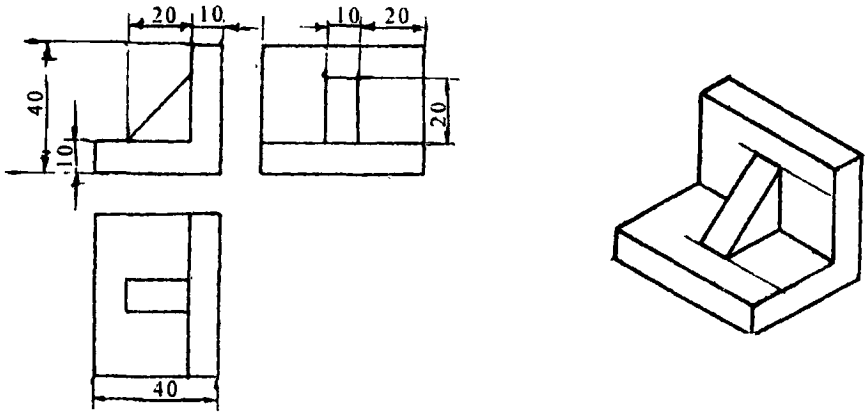

Fig. 11.20

CHAPTER 12

Sections of Solids

12.1 Sectioning of solids

12.1.1 Introduction

Sections and sectional views are used to show hidden detail more clearly. They are created by using a cutting plane to cut the object.

A section is a view of no thickness and shows the outline of the object at the cutting plane. Visible outlines beyond the cutting plane are not drawn.

A sectional view, displays the outline of the cutting plane and all visible outlines which can be seen beyond the cutting plane.

Improve visualization of interior features.Section views are used when important hidden details are in the interior of an object.These details appear as hidden lines in one of the orthographic principal views; therefore, their shapes are not very well described by pure orthographic projection.

12.1.2 Types of Section Views

- Full sections
- Half sections
- Offset sections
- Revolved sections
- Removed sections
- Broken-out sections

12.1.3 Cutting Plane

- Section views show how an object would look if a cutting plane (or saw) cut through the object and the material in front of the cutting plane was discarded

Representation of cutting plane

According to drawing standards cutting plane is represented by chain line with alternate long dash and dot. The two ends of the line should be thick.

Full Section View

- In a full section view, the cutting plane cuts across the entire object
- Note that hidden lines become visible in a section view

Hatching

On sections and sectional views solid area should be hatched to indicate this fact. Hatching is drawn with a thin continuous line, equally spaced (preferably about 4mm apart, though never less than 1mm) and preferably at an angle of 45 degrees.

(i) Hatching a single object

When you are hatching an object, but the objects has areas that are separated, all areas of the object should be hatched in the same direction and with the same spacing.

(ii) Hatching Adjacent objects

When hatching assembled parts, the direction of the hatching should ideally be reversed on adjacent parts. If more than two parts are adjacent, then the hatching should be staggered to emphasise the fact that these parts are separate.

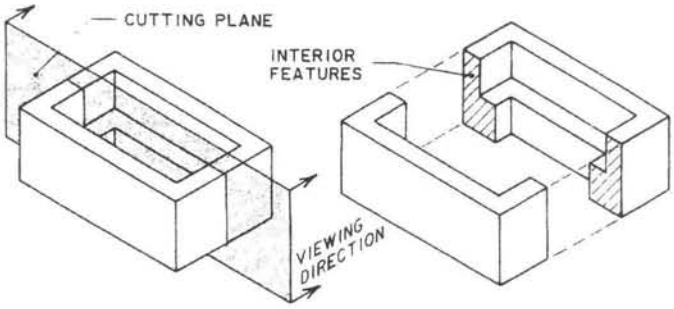

Fig. 12.1

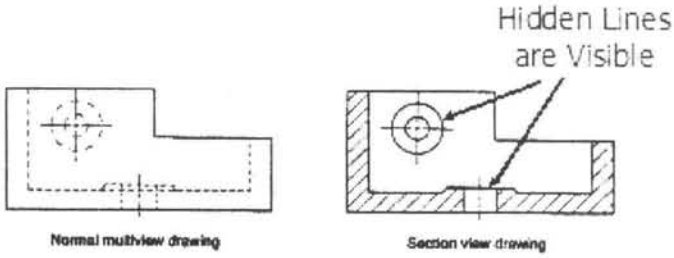

Fig. 12.2

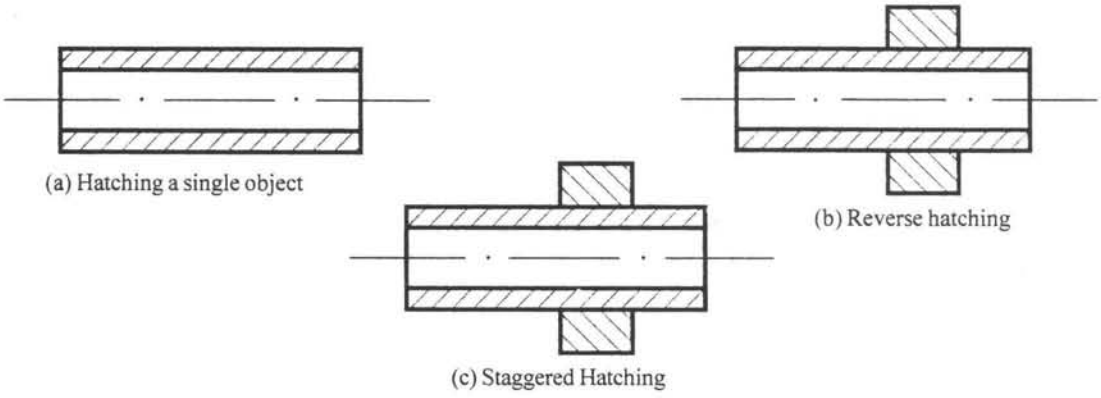

Fig. 12.3

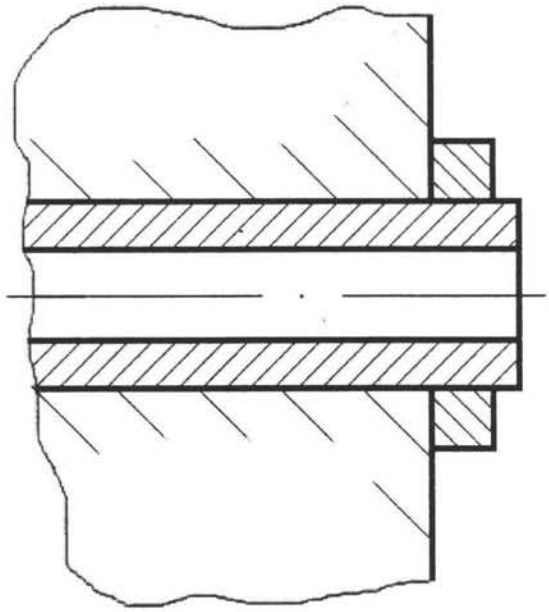

Fig. 12.4 Hatching large areas

EXAMPLES

Problem 1 : A square prism of base side on 30 mm and axis length 60 mm is resting on HP on one of its bases, with a base side inclined at 30° to VP. It is cut by a plane .inclined at 40° to. HP and perpendicular to VP and is bisecting the axis of the prism. Draw its front view, sectional top view and true shape of section.

Solution : Draw the projections of the prism in the given position. The top view is drawn and the front view is projected.

To draw the cutting plane, front view and sectional top view

1. Draw the Vertical Trace (*VT*) of the cutting plane inclined at 40° to *XY* line and passing through the mid point of the axis.
2. As a result of cutting, longer edge a' p' is cut, the end a' has been removed and the new corner l' is obtained.
3. Similarly 2' is obtained on longer edge b' q', 3' on c' r' and 4' on d' s',
4. Show the remaining portion in front view by drawing dark lines.
5. Project the new points 1', 2', 3' and 4' to. get 1, 2, 3 and 4 in the top view of the prism, which are coinciding with the bottom end of the longer edges p, q, r and s respectively.
6. Show the sectional top view or apparent section by joining 1, 2, 3 and 4 by drawing hatching lines.

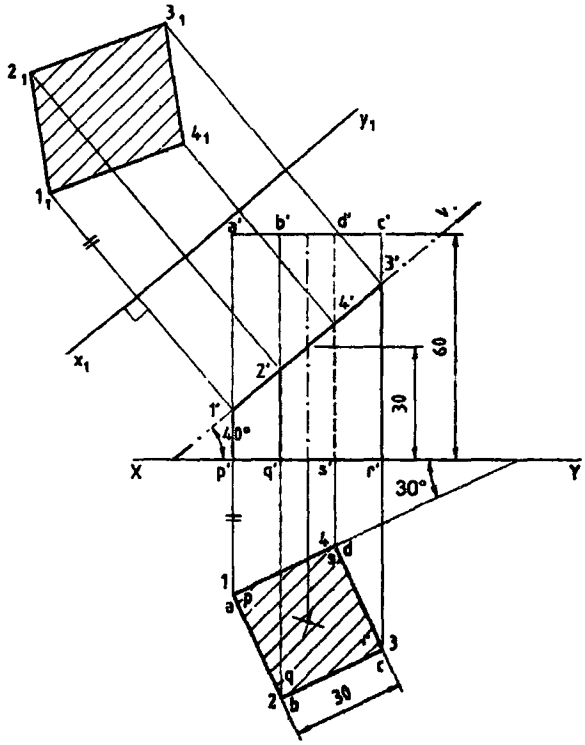

Fig. 12.5

To draw the' true shape of a section

1. Consider an auxiliary inclined plane parallel to the cutting plane and draw the new reference line x_1 y_1 parallel to VT of the cutting plane at an arbitrary distance from it.
2. Draw projectors passing through 1', 2', 3' and 4' perpendicular to x_1 y_1 line.
3. The distance of point 1 in top view from *XY* line is measured and marked from x_1 y_1 in the projector passing through 1' to get 1_1'. This is repeated to get the other points 2_1, 3_1 and 4_1.
4. Join these points to get the true shape of section as shown by drawing the hatching lines.

Problems 2 : A cube of 45 mm side rests with a face on HP such that one of its vertical faces is inclined at 30° to VP. A section plane, parallel to VP cuts the cube at a distance of 15 mm from the vertical edge nearer to the observer. Draw its top and sectional front view.

Solution :

1. Draw the projections of the cube and the Horizontal Trace (*HT*) of the cutting plane parallel to *XY* and 15 mm from the vertical edge nearer to the observer.
2. Mark the new points 1,2 in the top face edge as *ab* and *bc* and similarly, 3, 4 in the bottom face edge as *qr* and *pq* which are invisible in top view.
3. Project these new points to the front view to get 1', 2 '. in top face and 3', 4' in. bottom face.

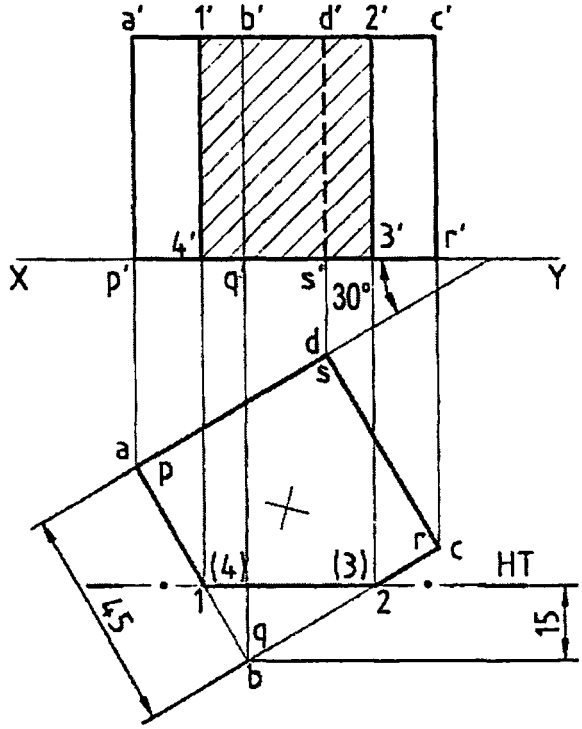

Fig. 12.6

4. Join them and draw hatching lines to show the sectional front view which also shows the true shape of section.

Problem 3 : A pentagonal pyramid of base side 40 mm and axis length 80mm is resting on HP on its base with one of its base side parallel to VP. It is cut by a plane inclined at 30° to HP and perpendicular to VP and is bisecting the axis. Draw its front view, sectional top view, and the true shape of section.

Solution : Draw the projection of the pyramid in the given position. The top view is drawn and the front view is projected.

To draw the cutting plane, front view and sectional top view

1. Draw the *VT* of the cutting plane inclined at 30° to *XY* line and passing through the midpoint of J the axis.
2. As a result of cutting, new corners 1', 2', 3', 4' and 5' are obtained on slant edges *a'o'*, *b'o'*, *c'o'*, *d'o'* and *e'o'* respectively.
3. Show the remaining portion in front view by drawing dark lines.
4. Project the new points to get 1, 2, 3, 4 and 5 in the top view on the respective slant edges .
5. Note that 2' is extended horizontally to meet the extreme slant edge *a'o' at m'*, it is projected to meet *ao* in top view at m. Considering *o* as centre, *om* as radius, draw an arc to get 2 *on bo*.

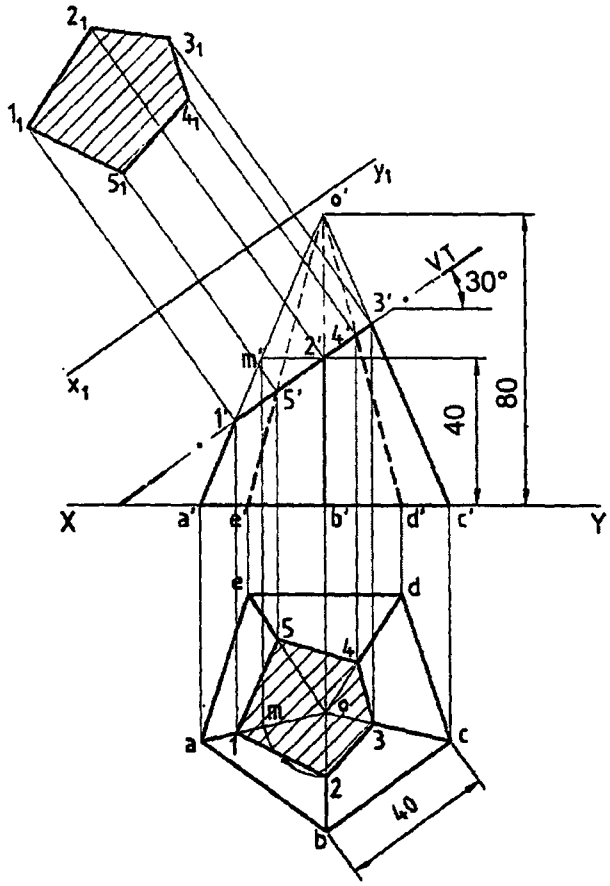

Fig. 12.7

6. Join these points and show the sectional top view by drawing hatching lines. SS

To draw true shape of section.

1. Draw the new reference-line x_1 y_1 parallel to *VT* of the cutting plane.
2. Projectors from 1',2' etc. are drawn perpendicular to x_1 y_1 line .
3. The distance of point 1 in top view from *XY* line is measured and marked from x_1 y_1 in the projector passing through 1' to get 1_1' This is repeated to get 2_1,3_1 etc.
4. Join these points and draw hatching lines to show the true shape of section.

Problem 4 : *A hexagonal prism of base side 30 mm and axis length 60 mm is resting on HP on one of its bases with two of the vertical faces perpendicular to VP. It is cut by a plane inclined at 60° to HP and perpendicular to VP and passing through a point at a distance 12 mm from the top base. Draw its front view, sectional top view and true shape of section.*

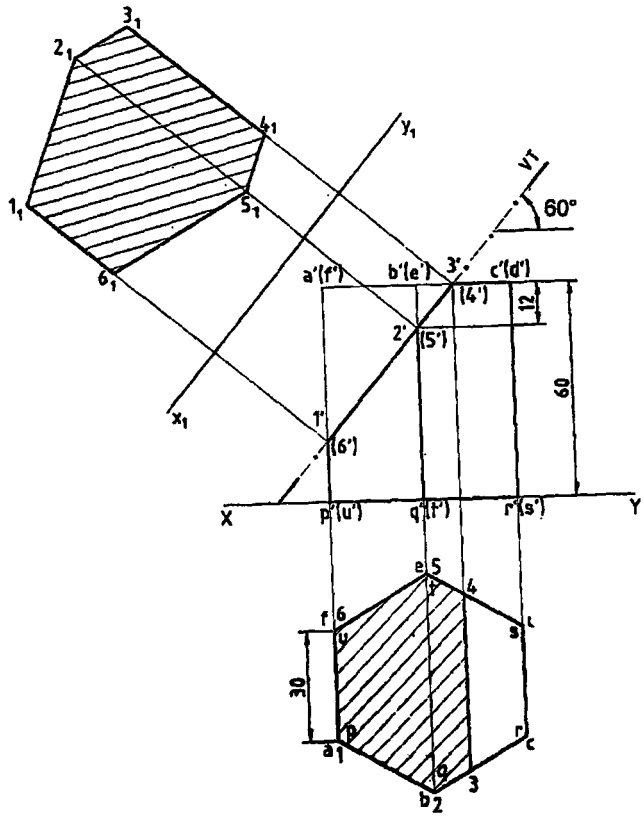

Fig. 12.8

Solution : Draw the projections of the prism in the given position. The top view is drawn and the front view is projected.

To draw the cutting plane, front view and sectional top view

1. Draw the *VT* of the cutting plane inclined at 60° to *XY* and passing through a point in the axis, at a distance 12 mm from the top base.
2. New points 1', 2', etc. are marked as mentioned earlier. Note that the cutting plane cuts the top base, the new point 3' is marked on base side b' c' and 4' marked on (d') (e') which is invisible.
3. Project the new points I', 2', etc. to get 1, 2, etc. in the top view.
4. Join these points and draw the hatching lines to show the sectional top view.

To draw true shape of section

1. Draw new reference line x_1 y_1 parallel to the *VT* of the cutting plane.
2. Draw the projectors passing through 1', 2', etc. perpendicular to x_1 y_1 line.
3. The distance of point 1 in top view from XY line is measured and marked from x_1 y_1 in the projector passing through 1' to get 1_1 This is repeated to get other points 2_1, 3_1 etc.
4. Join these points to get the true shape of section and this is shown by hatching lines.

Problem 5 : A cylinder of base diameter 40 mm and height 60 mm rests on its base on HP. It is cut by a plane perpendicular to VP and inclined at 30° to HP and meets the axis at a distance 30 mm from base. Draw the front view, sectional top view, and the true shape of section.

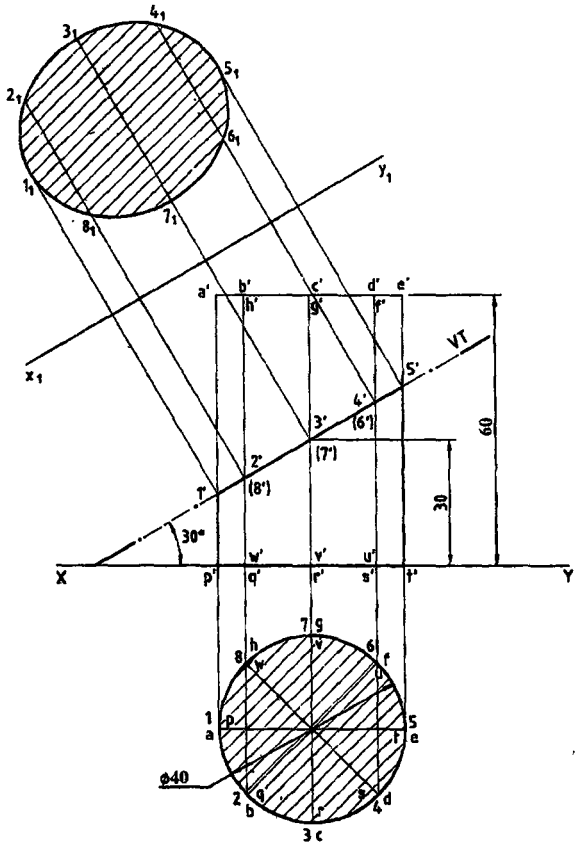

Fig. 12.9

Solution : Draw the projections of the cylinder. The top view is drawn and the front view is projected. Consider generators by dividing the circle into equal number of parts and project them to the front view.

To draw the cutting plane, front view and sectional top view

1. Draw the VT of the cutting plane inclined at 30° to *XY* line and passing through a point on the axis at a distance 30 mm from base.
2. The new point 1', 2' etc. are marked on the generators *a' p'*, *h' q'* etc.
3. Project the new points to the top view to get 1, 2, etc. which are coinciding with *p, q,* etc. on the base circle.
4. Join these points and draw the hatching lines to show the sectional top view.

To draw true shape of section.

1. Draw $x_1 y_1$ line parallel to *VT* of the cutting plane.
2. Draw the projectors through 1', 2', etc. perpendicular to $x_1 y_1$ line.
3. The distance of point 1 in top view from *XY* line is measured and marked from $x_1 y_1$ in the projector passing through 1' to get 1_1. This is repeated to get other points 2_1,3_1 etc.
4. Join these points by drawing smooth curve to get the true shape of section and this is shown by hatching lines.

Problem 6 : A cone of base diameter 50 mm and axis length 75 mm, resting on HP on its base is cut by a plane in lined at 45° to HP and perpendicular to VP and is bisecting the axis. Draw the front view and sectional top view and true shape of this section.

Solution : Draw the projections of the cone. Consider generators by dividing the circle into equal number of parts and project them to the front view.

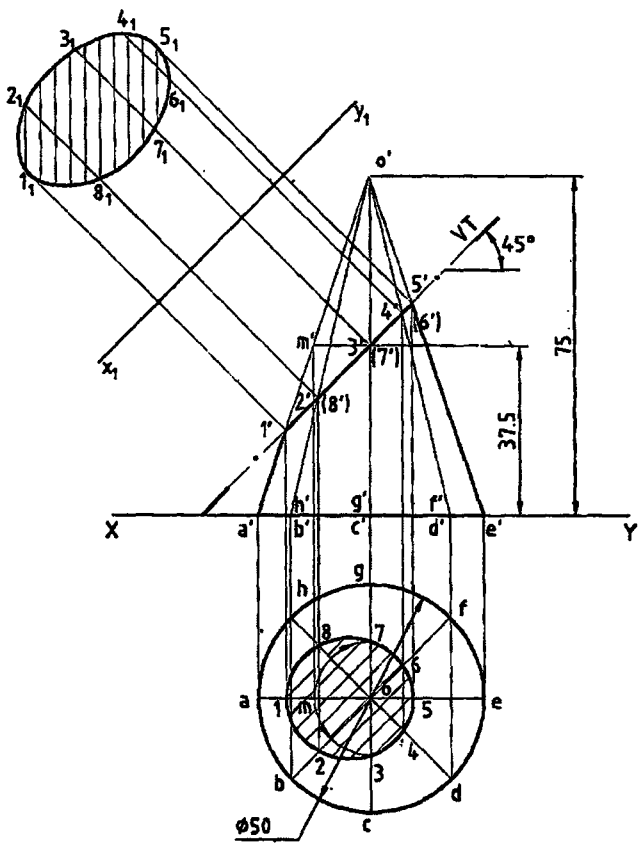

Fig. 12.10

To draw the cutting plane, front view and sectional top view

1. Draw the *VT* of the cutting plane inclined at 45° to the *XY* line and passing through the midpoint of the axis.
2. New points 1', 2' etc; are marked on the generators *a' o'*, *h' o'*, etc.
3. Project the new points to the top view to get 1, 2, etc. on the generators *ao*, *bo* etc.
4. Note that the new point 3' is produced to mark m' on *a' o'* and is projected to get *m* on *ao*. Considering *o* as centre and *om* as radius, draw an arc to get 3 on *co* in the top view. The same method is repeated to get 7 on *go*.
5. Join these points by drawing smooth curve and draw the hatching lines to show the sectional , top view.

To draw true shape of section

1. Draw $x_1 y_1$ line parallel to *VT* of the cutting plane.
2. Draw the projectors through 1', 2' etc. perpendicular to $x_1 y_1$ line.
3. The distance of point 1 in top view from *XY* line is measured and marked from x_1 y_1 in the projector passing through 1' to get 1_1 and is repeated to get 2_1 , 3_1 etc.
4. Join these points by drawing smooth curve to get the true shape of section and is shown by hatching lines.

Problem 7 : A pentagonal prism of base side 30 mm and axis length 60 mm is resting on HP on one of its rectangular faces, with its axis perpendicular to VP. It is cut by a plane inclined at 50° to VP and perpendicular to HP and passing through a point 25 mm from rear base of the prism. Draw its top view, sectional front view and true shape of section.

Solution : To draw the cutting plane, top view and sectional front view

1. Draw the projections of the prism. Draw the *HT* of the cutting plane at 50° to *XY* and passing through the point on the axis at a distance of 25 mm from the rear base.
2. Mark the new points 1 on *ap*, 2 on *bq* etc.
3. Show the remaining portion in top view by drawing dark lines.
4. Project the new point 1, 2, etc. to the front view to get 1', 2' etc. which are coinciding with the rear end of the longer edges *p'*, *q'* etc.
5. Show the sectional front view by joining 1', 2' etc. and draw hatching lines.

To draw the true shape of section

1. Consider an AVP and draw $x_1 y_1$ line parallel to *HT* of the cutting plane.
2. Draw projectors through 1,2 etc. perpendicular to x_1 y_1 line.
3. The distance of 1' in front view from *XY* line is measured and marked from x_1 y_1 in the projector passing through 1 to get $1'_1$, and this is repeated to get $2'_1$, $3_1'$, etc.
4. Join them and show the true shape of section by drawing hatching lines.

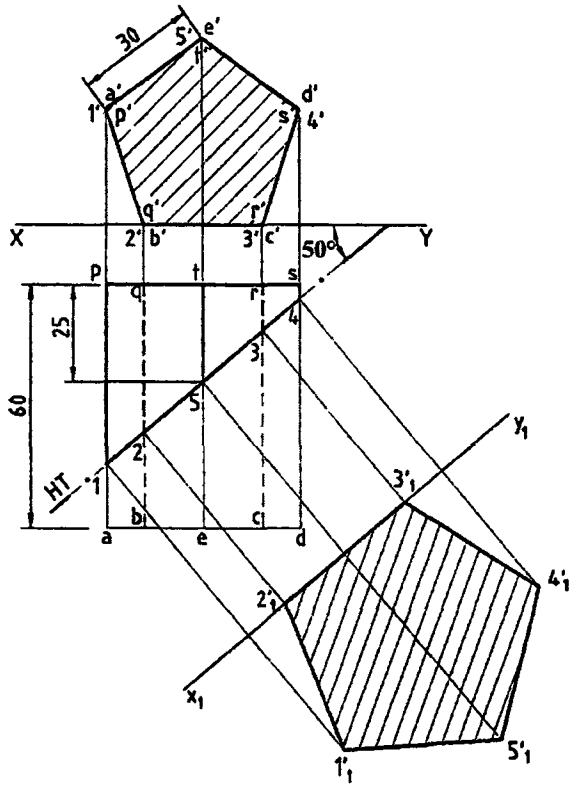

Fig. 12.11

Problem 8 : A cylinder of base diameter 45 and axis length 60 mm is resting on HP on one its generators with its axis perpendicular to VP. It is cut by a plane inclined 30° to VP and perpendicular to HP 'and is bisecting the axis of the cylinder. Draw its top view, sectional front view and true shape of section.

Solution : Draw the projections of the cylinder. Consider generators by dividing the circle into equal number of parts and project them to the top view.

To draw the cutting plane, top view and sectional, front view

1. Draw the *HT* of the cutting plane inclined at 30° to *XY* and passing through the midpoint of the axis.
2. The new points 1, 2, etc. are marked on generators *ap*, *bq*, etc.
3. Project the new points to the front view to get 1', 2' etc. which are coinciding with *p*, *q*, etc. on the base circle.
4. Join them and draw hatching lines to show the sectional front view.

To draw the true shape of section

1. Draw $x_1 y_1$ line parallel to *HT* of the cutting plane.

2. Draw projectors through 1, 2, etc. perpendicular to $x_1 y_1$ line.
3. The distance of 1' in front view from *XY* line is measured and marked from $x_1 y_1$ in the projector passing through 1' to get $1'_1$ and is repeated to get $2'_1, 3'_1$ etc.
4. Join them by drawing smooth curve and show the true shape of section by drawing hatching lines.

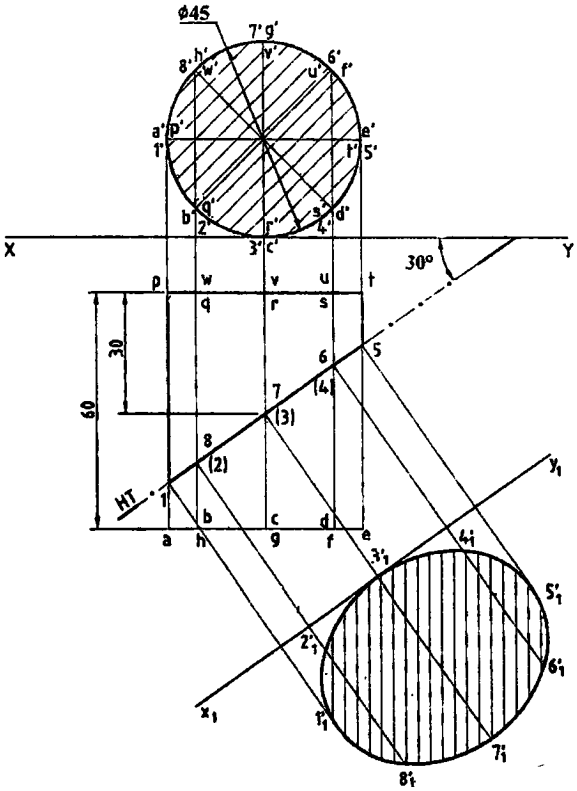

Fig. 12.12

EXERCISES

1. A cube of side 35 mm rests on the ground with one of its vertical faces inclined at 30° to the V.P. A vertical section plane parallel to V.P. and perpendicular to H.P. and at a distance of 35 mm from V.P. cuts the solid. Draw the sectional front view and top view.
2. A regular hexagonal pyramid of side 30 mm and height 65 mm is resting on its base on H.P. one of its base sides is parallel to V.P. It is cut by a cutting plane which is parallel to H.P. and perpendicular to V.P. and passing through at a height of 45 mm from its bottom. Draw its sectional front view and top view.

3. A regular hexagonal prism of side 30 mm and height 70 mm is standing on V.P. with its axis perpendicular to V.P. being one of its rectangular faces parallel to H.P. It is cut by a section plane inclined at 60° to the H.P. perpendicular to V.P. and passing through the mid-point of the bottom side on the front face which is parallel to H.P. Draw its sectional front view and top view. Also draw the true shape.
4. A regular pentagonal prism of side 35 mm and height 75 mm has its base in H.P. and one of the rectangular faces makes an angle of 45° to V.P. It is cut by a section plane inclined at 60° to H.P. perpendicular to V.P. and passing through one of the vertical edges at a distance of 25 mm above the base Draw its

   (a) Sectional front view (b) Sectional top view and (c) True shape.
5. A cone of diameter 60 mm and height 70 mm is resting on ground on its base. It is cut by a section plane perpendicular to V.P. inclined at 45° to H.P. and cutting the axis at a point 40 mm from the bottom. Draw the front view, sectional top view and true shape.
6. A right circular cylinder of diameter 60 mm and height 75 mm rests on its base such that its axis is inclined at 45° to H.P. and parallel to V.P. A cutting plane parallel to H.P. and perpendicular to V.P. cuts the axis at a distance of 50mm from the bottom face. Draw the front view and sectional top view.
7. A regular pentagonal pyramid of side 30 mm and height 60 mm is lying on the H.P. on one of its triangular faces in such a way that its base edge is at right angles to V.P. It is cut by a plane at 30° to the V.P. and at right angle to the H.P. bisecting its axis. Draw the sectional view from the front, the view from above and the true shape of the section.
8. A square pyramid base 50 mm side and axis 75 mm long is resting on the ground with its axis vertical and side of the base equally inclined to the vertical plane. It is cut by a section plane perpendicular to V.P. inclined at 45° to the H.P. and bisecting the axis. Draw its sectional top view and true shape of the section.
9. A hexagonal pyramid of base side 30 mm and height 75 mm is resting on the ground with its axis vertical. It is cut by plane inclined at 30° to the H.P. and passing through a point on the axis at 20 mm form the vertex. Draw the elevation and sectional plane.
10. A cut of 40 mm side rests on the H.P. on one of its faces with a vertical face inclined on 30o to V.P. A plane perpendicular to the H.P. and inclined at 60° to the V.P. cuts the cube 5mm away from the axis. Draw the top view and the sectional front view.
11. A cylinder 40 mm dia. and 60 mm long is lying is the H.P. with the axis parallel to both the planes. It is cut by a vertical section plane inclined at 30° to V.P. so that the axis is cut a point 20 mm from one of its ends. Draw top view, sectional front view and true shape of section.

CHAPTER 13

Freehand Sketching

13.1 Introduction

Freehand sketching is one of the effective methods to communicate ideas irrespective of the branch of study. The basic principles of drawing used in freehand sketching are similar to those used in drawings made with instruments. The sketches are self explanatory in making them in the sequence shown (Fig. 13.1 to 13.14).

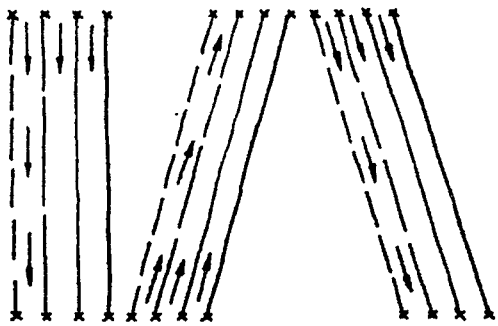

Fig. 13.1 Sketching Straight Lines

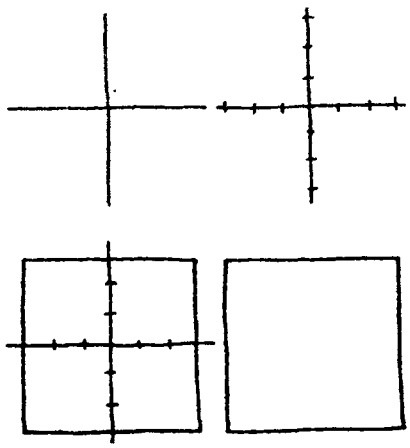

Fig. 13.2 Sketching a Square

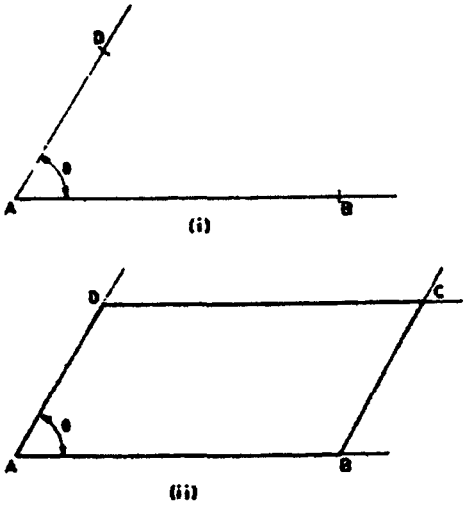

a - Sketching a Parallelogram

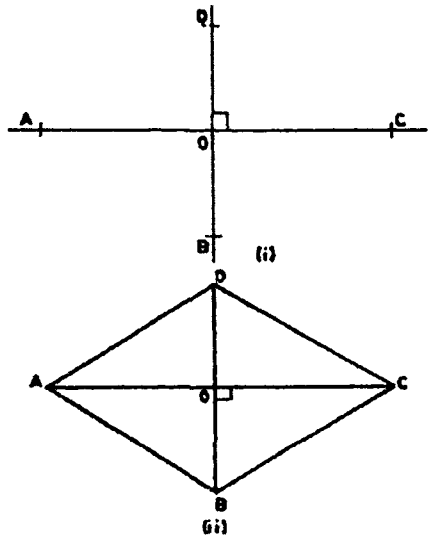

b - Sketching a Rhombus

Fig. 13.3

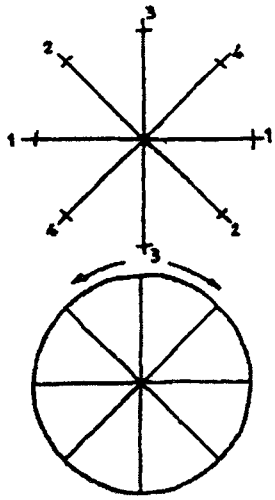

Fig. 13.4 Sketching a Circle

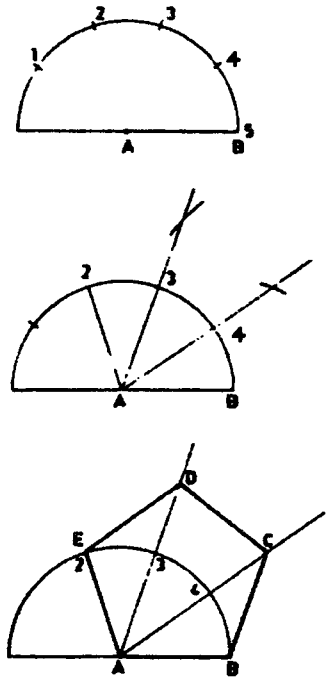

Fig. 13.5 Sketching a Pentagon

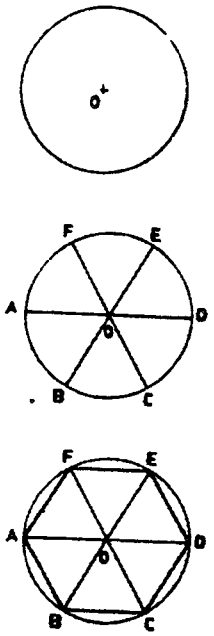

Fig. 13.6 Sketching a Hexagon

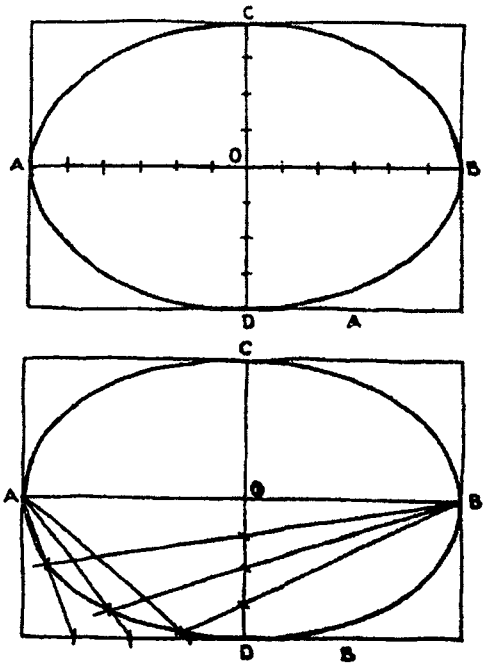

Fig. 13.7 Sketching an Ellipse

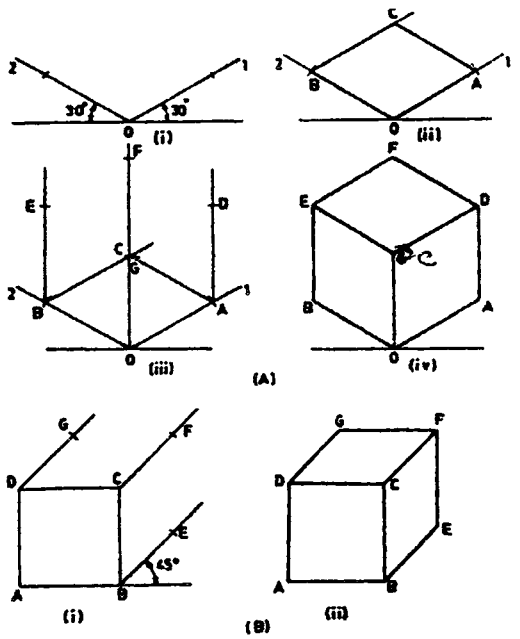

Fig. 13.8 Sketching a Cube

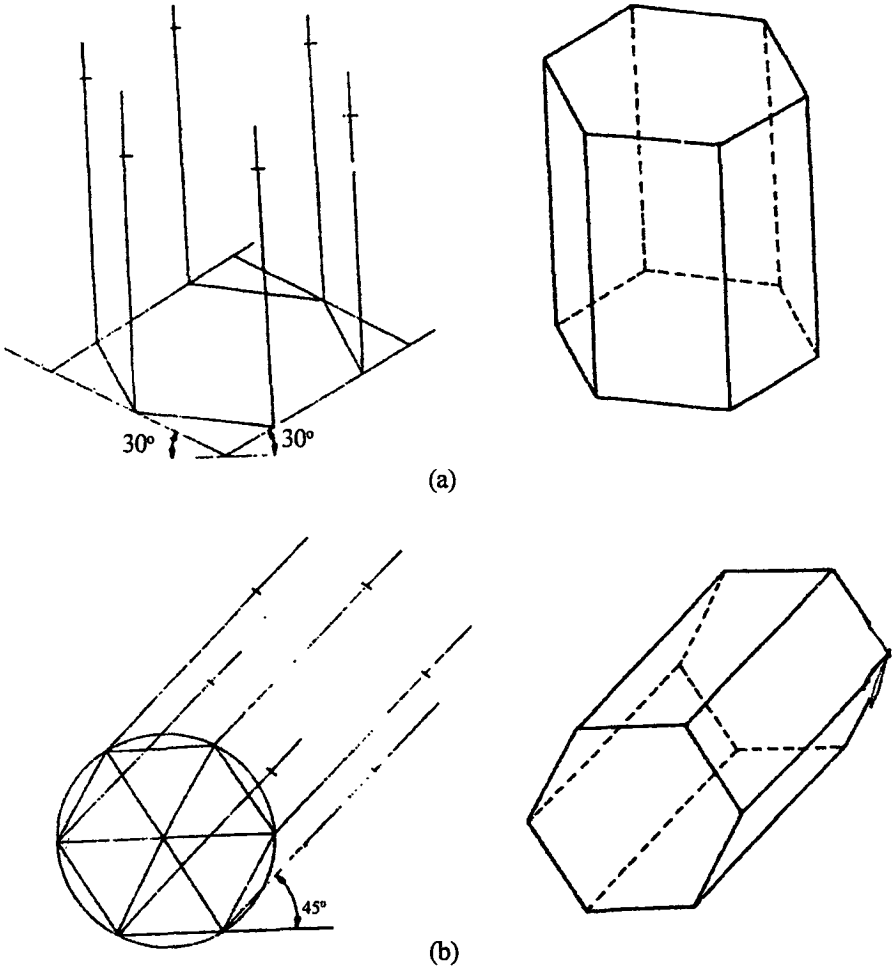

Fig. 13.9 Sketching a Hexagonal Prism

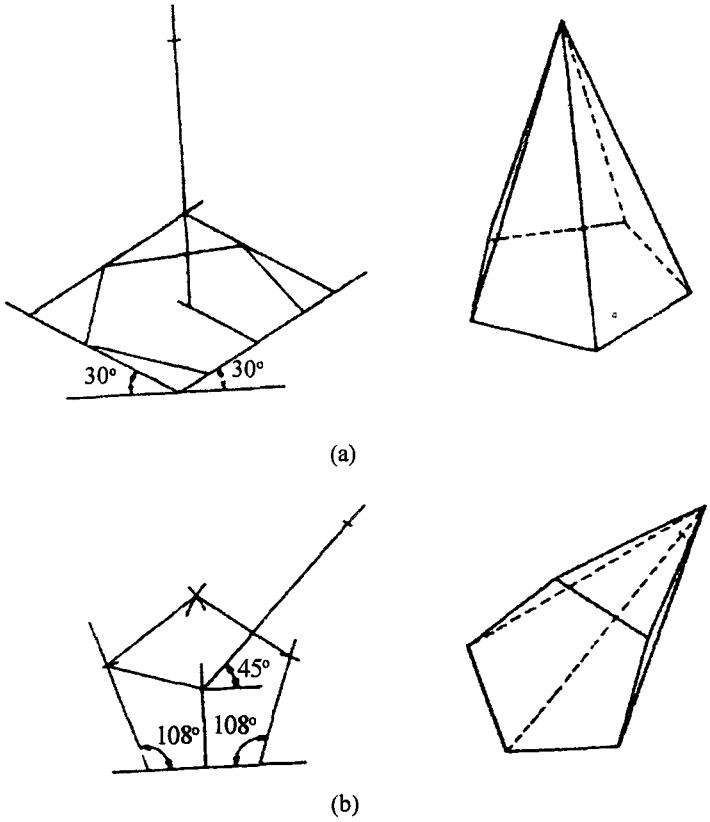

Fig. 13.10 Sketching a Pentagonal Pyramid

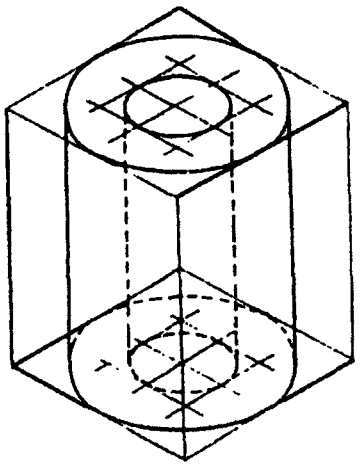

Fig. 13.11 Sketching a Hollow Cylinder

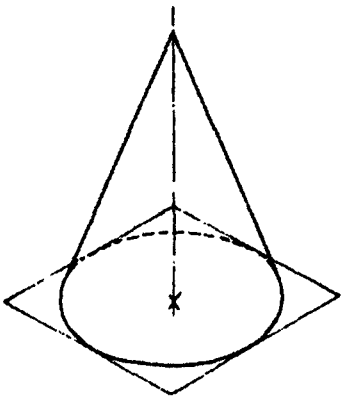

Fig. 13.12 Sketching a Cone

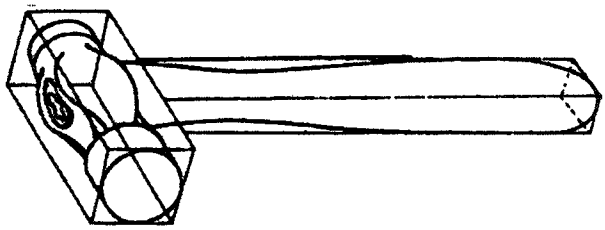

Fig. 13.13 Sketching a Ball Peen Hammer

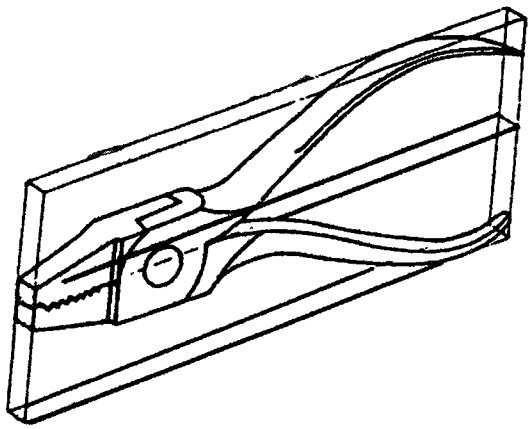

Fig. 13.14 Sketching a Cutting Plier

CHAPTER 14

Computer Aided Design and Drawing (CADD)

14.1 Introduction

In previous chapters we dealt with traditional drawings in which we use essentially drawing board tools such as paper, pencils, drafter, compasses, eraser, scale etc., which will take more time and tough in complex drawings. The most drawback with traditional drawing is INFORMATION SHARING i.e. if an engineer is drawing design of machine component and suddenly the manufacturer to modifies dimension of innermost part of the component; in such situations one cannot modify the drawing already drawn, he should redraw the component.

CADD is an electronic tool that enables us to make quick and accurate drawings with the use of a computer. Drawings created with CADD have a number of advantages over drawings created on a drawing board. CADD drawings are neat, clean and highly presentable. Electronic drawings can be modified quite easily and can be presented in a variety of formats. There are hundreds of CADD programs available in the CADD industry today. Some are intended for general drawing work while others are focused on specific engineering applications. There are programs that enable you to do 2D drawings, 3D drawings, renderings, shadings, engineering calculations, space planning, structural design, piping layouts, plant design, project management, etc.

Examples of CAD software

– AutoCAD, PRO/Engineer, IDEAS, UNIGRAPHICS, CATIA, Solid Works, etc.

14.2 History of CAD

In 1883 Charles Barbage developed idea for computer. First CAD demonstration is given by Ivan Sutherland (1963). A year later IBM produced the first commercial CAD system. Many changes have taken place since then, with the advancement of powerful computers, it is now possible to do all the designs using CAD including two-dimensional drawings, solid modeling, complex engineering analysis, production and manufacturing. New technologies are constantly invented which make this process quicker, more versatile and more Powerful.

14.3 Advantages of CAD

(i) Detail drawings may be created more quickly and making changes is more efficient than correcting drawings drawn manually.

(ii) It allows different views of the same object and 3D pictorial view, which gives better visualization of drawings
(iii) Designs and symbols can be stored for easy recall and reuse.
(iv) By using the computer, the drawing can be produced with more accuracy.
(v) Drawings can be more conveniently filed, retrieved and transmitted on disks and tape.
(vi) Quick Design Analysis, also Simulation and Testing Possible.

14.4 Auto Cad Main Window

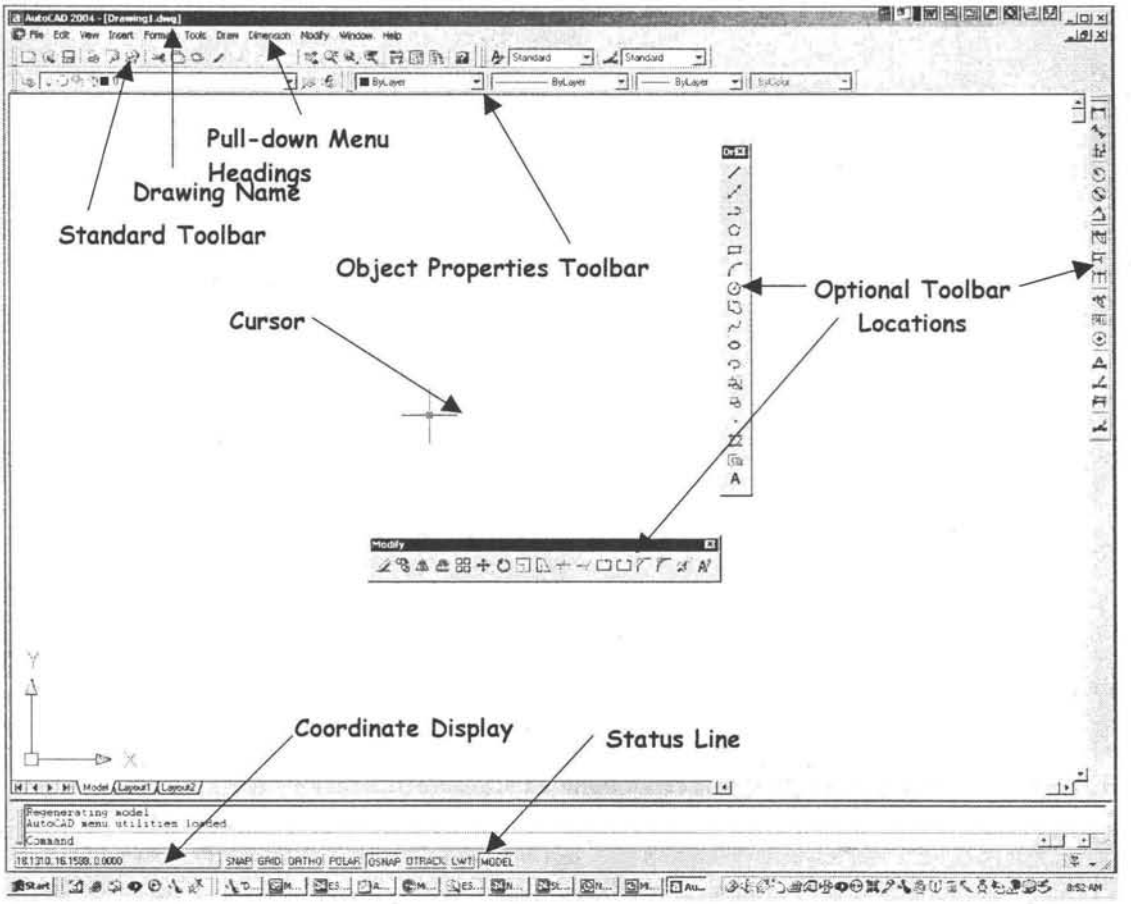

Fig. 14.1

14.4.1 Starting a New Drawing

Select NEW file from pull-down or Toolbar

File>New

Startup dialog box will be opened, with four Options

- Open an existing drawing
- Start from scratch

- Use a template
- Use a Wizard

Select *Start from Scratch* , Click on *Metric(millimetres).*

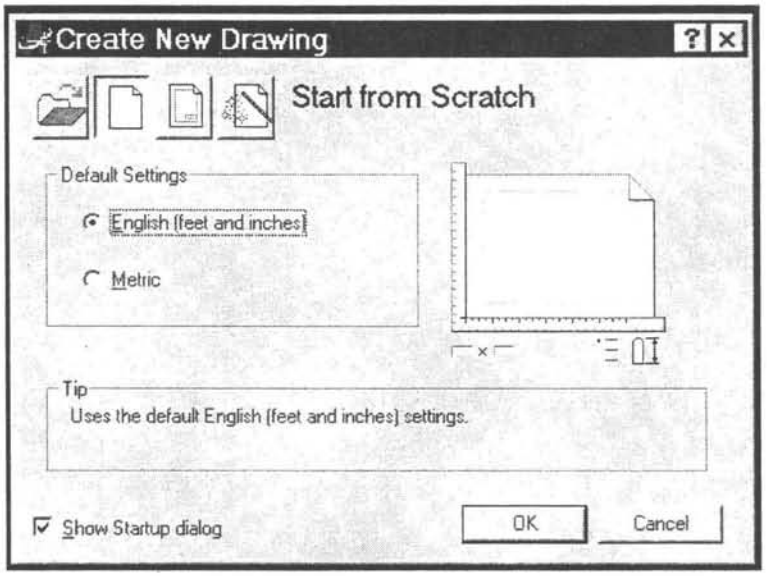

Fig. 14.2

14.4.2 Opening an Existing Drawing

Choose OPEN from FILE pull-down or use opening an existing drawing in the start-up dialogue

Note: Drawing files have extensions of .dwg

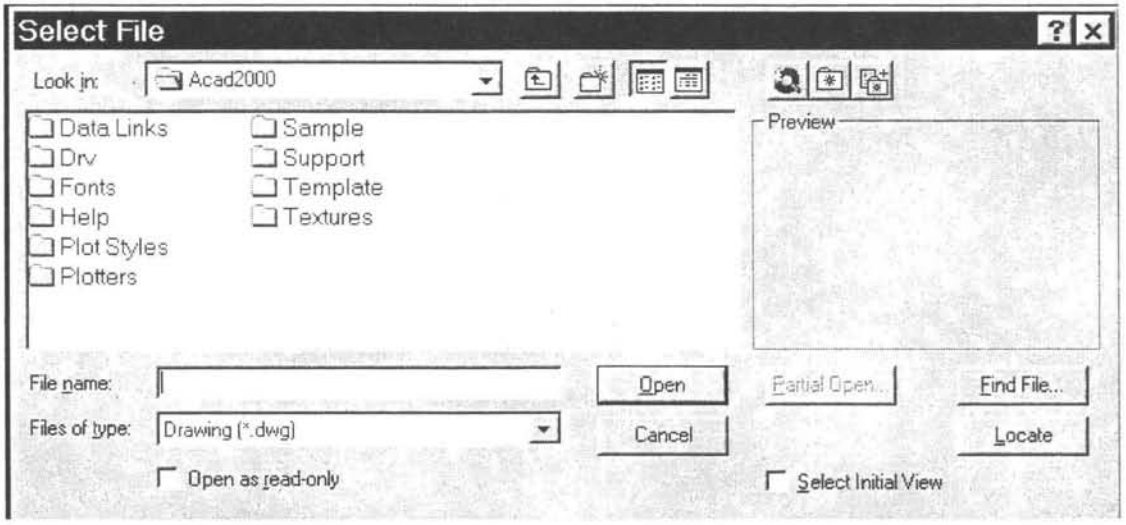

Fig. 14.3

14.4.3 Setting drawing limits

It is normal when using AutoCAD to draw objects full size, so it's usually necessary to reset the drawing limits to (about) the size of the object being drawn. Move the cursor to the bottom left of the screen, you can notice Command box. We can fix required paper size like A0, A1, A2, A3, A4 etc. from the Command box.

```
Command:
Command: '_limits
Reset Model space limits:
Specify lower left corner or [ON/OFF] <0.0000,0.0000>:
Specify upper right corner <420.0000,297.0000>: 297,210
Command:
```

Fig. 14.4

14.4.4 Erasing Objects

Removes objects from the drawing. Activate from Modify pull-down

Prompt will appear to.... select objects

Cursor changes to selection box

Ways to select objects for erasure

Pick with selection box

Create a window to select multiple objects

Type ALL to select everything visible on screen

14.4.5 Saving a Drawing File

Save

Saves drawing to current name (Quick save)

Allows user to input name if drawing has never been saved

Saveas

Allows input of a drawing name or location every time

Provides the ability to change file saving version

14.4.6 Exiting an AutoCAD Session

Close

- Closes the drawing but does not leave the software

Exit

- Closes the drawing AND leaves the software

Note: Both will give an extra chance to save the changes in your work

14.5 The Coordinate System

The coordinate system is another method of locating points in the drawing area. It enables us to locate points by specifying distances from a fixed reference point. One can locate a point by giving its distance in the horizontal direction, vertical direction, measuring along an angle, etc.

The coordinate system is available when a function requires data input in the form of point locations. You may use it while drawing, editing or any time you need to locate a point. The most common coordinate systems are as follows:

- Cartesian coordinates
- Polar coordinates

14.5.1 Cartesian Coordinates

Cartesian coordinates is a rectangular system of measurement that enables you to locate points with the help of horizontal and vertical coordinates. The horizontal values, called X-coordinates, are measured along the X-axis. The vertical values, called Y-coordinates, are measured along the Y-axis. The intersection of the X- and Y-axes is called the origin point, which represents the 0,0 location of the coordinate system.

The positive X values are measured to the right and the positive Y values are measured above the origin point. The negative X and Y values are measured to the left and below. To enter a coordinate, you need to enter both the X and Y values separated by a comma (X, Y).

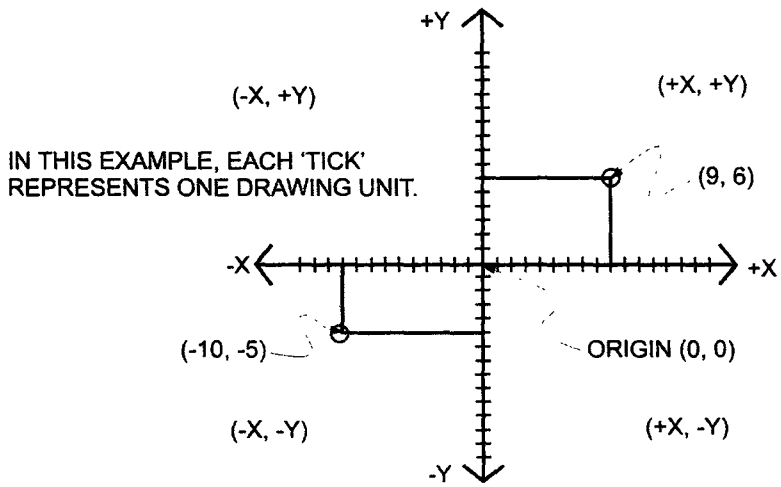

Fig. 14.5

14.5.2 Polar Coordinates

Polar coordinates allow you to define a point by specifying the distance and the direction from a given point. This mode of measurement is quite helpful in working with angles. To draw a line at an angle, you need to specify how long a line you want to draw and specify the angle.

14.6 The Formats to Enter Coordinates

Cartesian or polar coordinate values can be entered in two formats:

- Absolute
- Re lative

Absolute format is a way of measuring distances from a fixed reference location (origin point), which is the 0,0 location of the coordinate system. Consider this point to be stationary at all times. In some CADD programs this point remains visible at the left bottom corner of the drawing area, while in others it is invisible.

You can use this point as a reference to measure any distance in the drawing. Absolute coordinates are primarily used to adjust the alignment of diagrams in a drawing, to align one drawing with another or to make plotting adjustments.

Relative format is a way of measuring distances from the last point entered. All measurements are taken the same way as the absolute coordinates, with the only difference being that the relative coordinates are measured from the last point entered instead of the origin point. When a point is entered, it becomes the reference for entering the next point and so on. This mode of measurement is frequently used for drawing because it is always convenient to place the drawing components relative to each other rather than a fixed reference point.

Examples

Cartesian Coordinates

- Sounds like math, and it is exactly the same as in math
- Input as either Absolute or Relative Coordinates
  - *Absolute X,Y*
  - *Relative @X,Y*

Polar Coordinates (Vector Coordinates)

- Used to input a distance and the direction angle
- Format: *@Distance<Angle*

14.6.1 User-Defined Coordinate System

CADD allows you to create a user-defined coordinate system that can help simplify drawing. When you need to work with a complex drawing that has many odd angles this mode of measurement is very useful.

Let.s say you need to draw or modify an odd-shaped diagram, it is very difficult to use Cartesian or polar coordinates because they would involve extensive calculations. In this case, you can create a custom coordinate system that aligns with the odd angles of the diagram.

To define a new coordinate system, you need to specify where you want the origin point and the direction of the X and Y-axis. The computer keeps working according to this customized coordinate system unless you set it back to normal

The user-defined coordinate system is especially helpful when you are working with 3D. In a 3D drawing, you need to define each point with three coordinates and work with various surfaces of a 3D model. The user-defined coordinate system allows you to align coordinates with a specific surface.

NOTE: At the bottom left of the AutoCAD is the coordinate display.

Move your cursor around the drawing area and watch the coordinate change

Function Keys

F1 - AutoCAD Help Screens

F2 - Toggle Text/Graphics Screen

F3 - OSNAP On/Off

F4 - Toggle Tablet Modes On/Off

F5 - Toggle Isoplanes Modes On/Off

F6 - Toggle Coordinates Modes On/Off

- Coordinates has 2 modes when in a drawing command
- *X,Y coordinates*
- *Polar coordinates (Distance<Angle)*

F7 - Toggle Grid Modes On/Off

F8 - Toggle Ortho Modes On/Off

F9 - Toggle Snap Modes On/Off

4F10 - Toggle Polar Modes On/Off

F11 - Toggle Object Snap Tracking Modes On/Off

Definitions :

– Click
- Press once and release
- Also commonly used to refer to left-click

– Left-click
- Press left-mouse button (LMB) once and release
- Commonly used to pick or choose an item

– Right-click
- Press right-mouse button (RMB) once and release
- Commonly used to access pop-up menu

– Double-click
- Commonly referred to clicking left mouse button twice

– Click-and-drag
- Commonly referred to pressing left mouse button (and *not* releasing it) and move the mouse as required
- The left mouse button is released to finish the command

14.7 Choosing Commands in AutoCAD

Methods of choosing commands or to execute the command

- Pick from pull-down menu
- Select from Toolbar
- Type command on Command Prompt Line

14.7.1 Pull-down Menus [pd menu] (Fig 14.6)

Select pull-down through left mouse button

Move mouse to command and click left button to select command

– Example:

- To draw straight line,
- [pd menu] >Design > Line

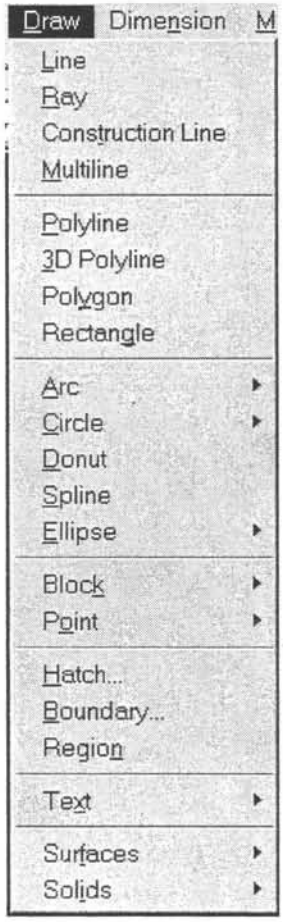

Fig. 14.6

14.7.2 Tool Bar Selection

Use mouse to track over Toolbar image for button detection

Left mouse button click will select command

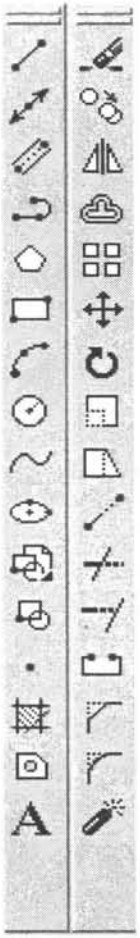

Fig. 14.7

14.7.3 Activating Tool Bars

Right mouse click on any toolbar button will bring up the toolbar activation menu

Pick toolbar menu to activate it

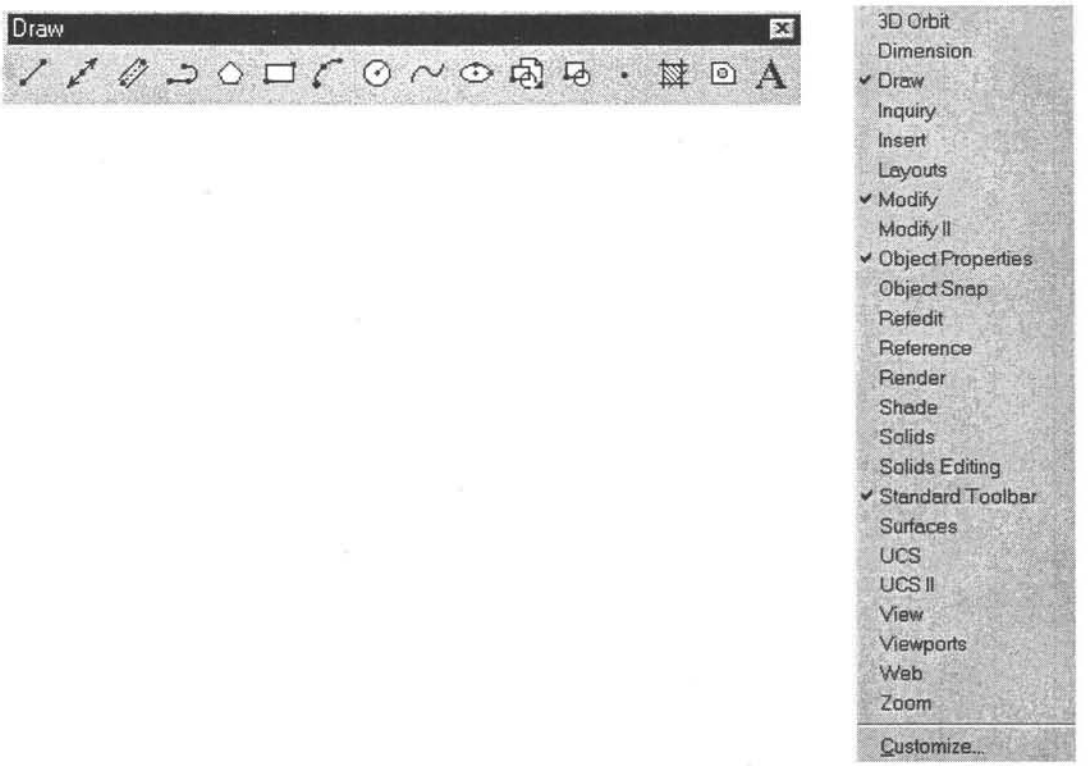

Fig. 14.9

Comman d Prompt Line (Fig. 14.9)

Located at bottom of screen

Left click in command prompt area and type in command

Press Enter key to input command

To draw a straight line type in

- Command: line {enter}

```
Command: line
Specify first point:
```

- You just have to type in the word line and press the key Enter (on the keyboard)
- The command is not case sensitive

14.8 Right Mouse Clicking

- It will get you everywhere!

Command and area specific menus will appear upon right mouse clicking

The default Right mouse click menu is shown on the right

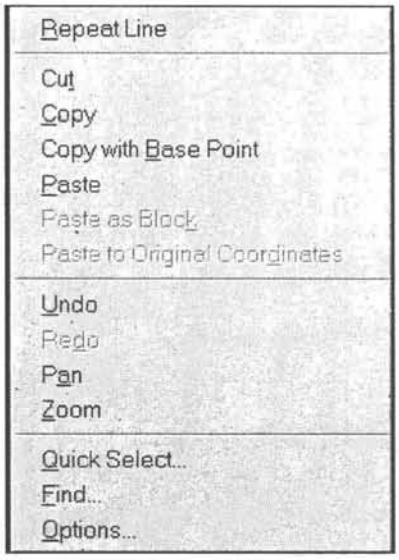

Fig. 14.10

14.8.1 Right Mouse Click Menus

Short-Cut menus will appear within a command (All commands)

The Default editing menu appears on the right

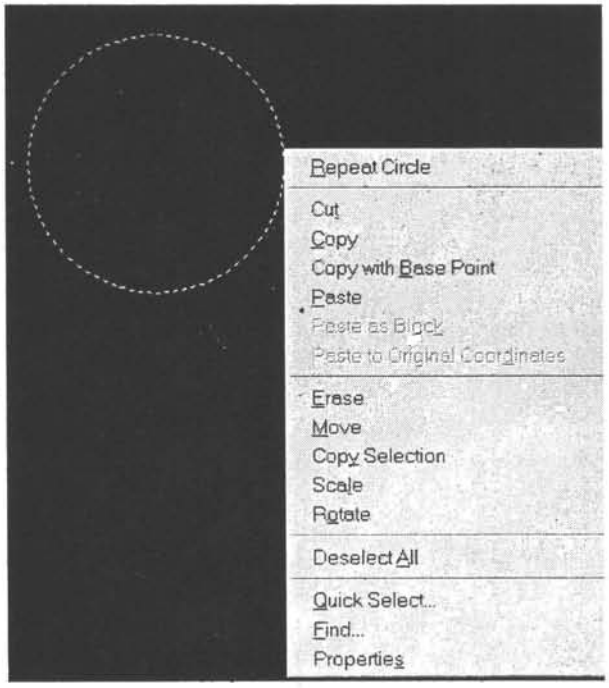

Fig. 14.11

14.9 Object Snaps

Uses geometry to location specific positions

- Activation of Object Snaps (one time use only)
  - *Typing the first 3 letters of the object snap name*
  - *Holding down the shift key while clicking the right mouse button*

14.9.1 Types of Object Snaps

Center

Center of circle or arc

Endpoint

End of line or arc

Extension

Extends lines & arcs by a temporary path

From

Must be used with another Object snap to establish a reference point

Insert

Locates an insertion point of an object

Intersection

Finds the common intersection point between 2 objects

Extended Intersection

Locates the intersection between objects that do not touch

Midpoint

Locates the middle of arcs & lines

Node

Snaps to a point

Parallel

Assists in constructing a line parallel to another

Perpendicular

Snaps to an angle of 90° to the selected object

Quadrant

Finds the 0°, 90°, 180°, and 270° locations about a circle

Tangent

Assists in creating lines, arcs or circles tangent to another object

Deferred Tangent

Occurs when multiple tangent selections are needed to complete a task

[ex. Drawing a line tangent to 2 circles requires 2 tangent picks, one for each circle. the first tangent selection is a deferred selection (line does not appear) until both tangents have been selected]

Object Snap Tracking

- *Allows the user to select more than one object snap location to determine a specific position. [ex. Use for finding the center of a rectangle in conjunction with the midpoint object snap]*

14.9.2 Running Object Snaps

The object snaps that never stop working for you

Activate from Tools pull-down, drafting settings

Right click on OSNAP button on status bar

On/Off by OSNAP button

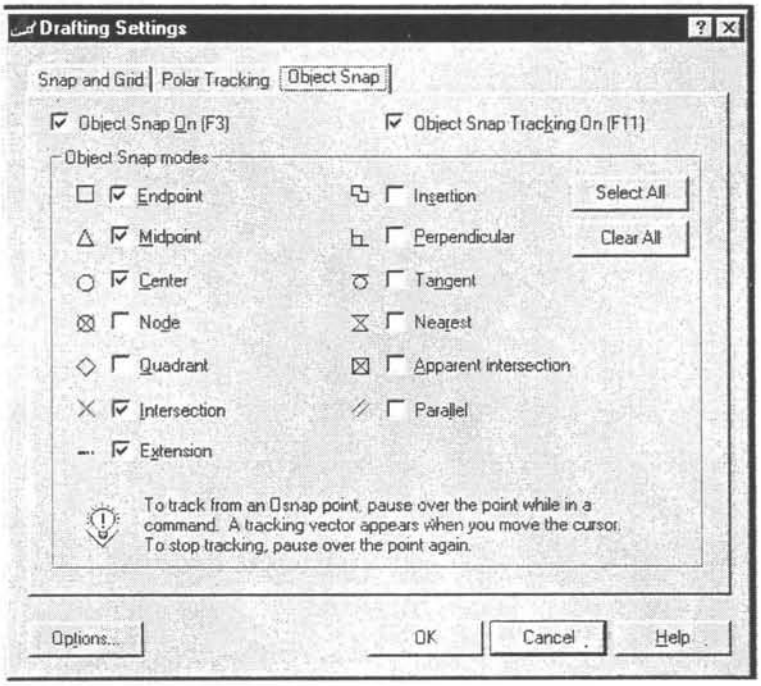

Fig. 14.12

14.9.3 Dividing an Object into Equal Segments

Divide Command

- Divides an entity into equal segments
  - *Select entity to divide*
  - *Enter the number of equal segments desired*
  - *Set Point style to another style other than default dot*
  - *Use OSNAP node to select points*

14.9.4 Setting off Equal Distances

Measure command

- Locates points based on the input distance
  - *Points are started from the closest endpoint that is used to select the line*
  - *Set Point style to another style other than default dot*
  - *Use OSNAP node to select points*

14.9.5 Polyline Command

Creates a multisided closed shape

- Located by the center and radius

  or
- Located by edges of polygon

Fig. 14.13

- Polygon may be inscribed or circumscribed about a circle (Remember inscribed is inside!)

(a) Circumscribed Polygon is outside like a bolt head radius is to the middle of segment

(b) Inscribed Polygon is inside radius is to the corner

Fig. 14.14

14.9.6 Ray Command

- Creates a line that is fixed on one end and infinite in one direction
  - *When a ray is broken, one segment turns into a line and the other remains a Ray, which is infinite in one direction*

14.9.7 Rectangle Command

- Creates a rectangular object based on 2 opposite corner points
- Use relative coordinates: @dist<ang or @X,Y for second point
  - *Rectangle options*
  - Fillet - fillets the corners based on input radius
  - Chamfer - chamfers the ends based on chamfer distances
  - Width - changes width of lines

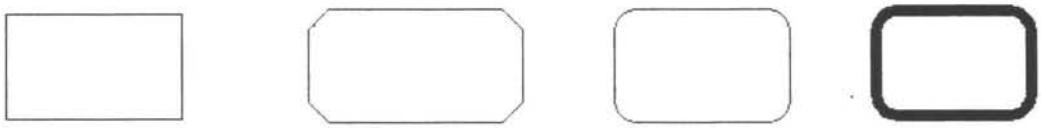

Fig. 14.15

14.9.8 Arc Command

- Arcs are created in the counter-clockwise rotation
- The 3 point Arc may be created in either direction

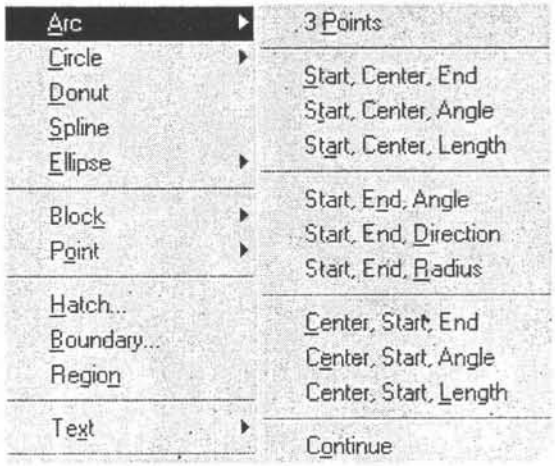

Fig. 14.16

3 point Arc

- 3 points are selected on the circumference of the circle

Fig. 14.17

Start, Center, End

Selection begins with a Start point on the circumference.

- Then select the center point of the arc
- Finally, select the End point on the circumference counter-clockwise from the start point

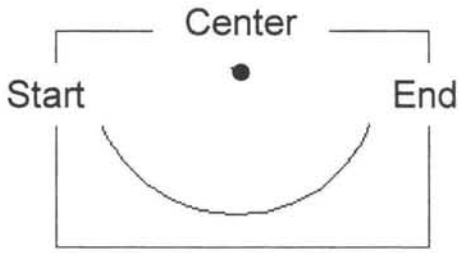

Fig. 14.18

Start, Center, Angle

- Select the Start point and Center locations.
- Type the value for the Angle in for counter-clockwise arc creation

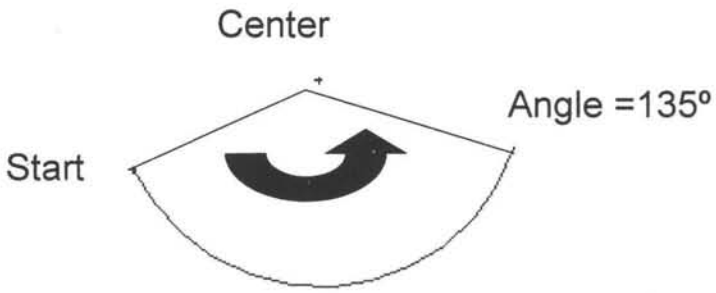

Fig. 14.19

Start, Center, Length of Chord

- Select the Start and Center points
- The length of chord is a linear distance from the Start point to the End point based on the arc's radius

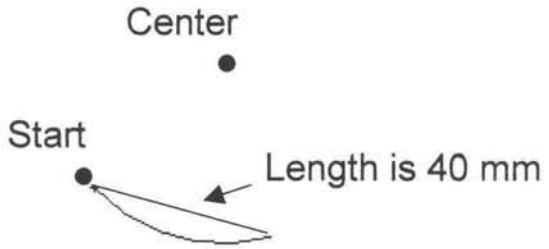

Fig. 14.20

Arc Command

Start, End, Angle

- Select the Start Point and then the End point of the Arc
- The Angle value is then input for counter-clockwise Arc

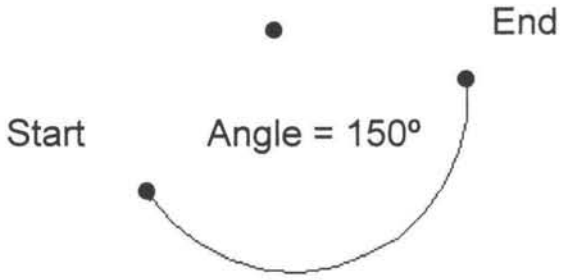

Fig. 14.21

Start, End, Direction

- Select Start and End Points
- Drag for the direction of Arc
    - Caution : Radius of Arc is not known while dragging

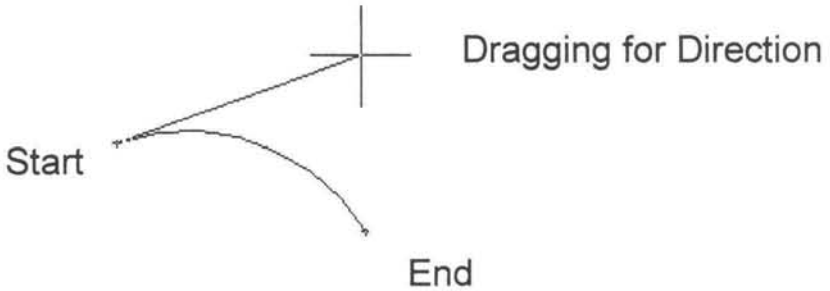

Fig. 14.22

Start, End, Radius

- Select Start point and End point of Arc
- Radius is then input
  - *+ radius = Minor Arc*
  - *- radius = Major Arc*

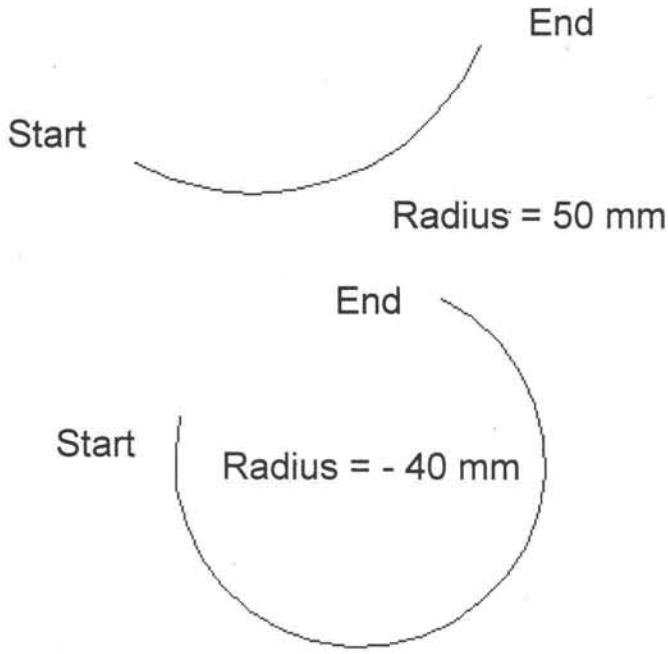

Fig. 14.23

14.9.9 Circle Command

Activate from Draw pull-down

Multiple options to create a circle

Center, Radius
Center, Diameter

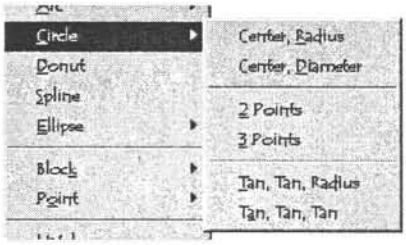

Fig. 14.24

Other options

(2 point, 3 point, Tangent) covered in Geometric Constructions Unit

A minimum of 2 points needed to create circle.

Select the center point

Type the Radius or Diameter distance at the next prompt

2 point & 3 point **(Fig. 14.25)**

- Create a circle by selecting 2 or 3 points on the circumference of the circle.

Fig. 14.25

14.9.10 Ellipse Command

- Center and Radius
- Create by selecting the center, then the 2 radius distance for the major and minor Axis
- Axis Endpoints
- Select the endpoints of the major axis first, and then select the radius distance for the minor axis

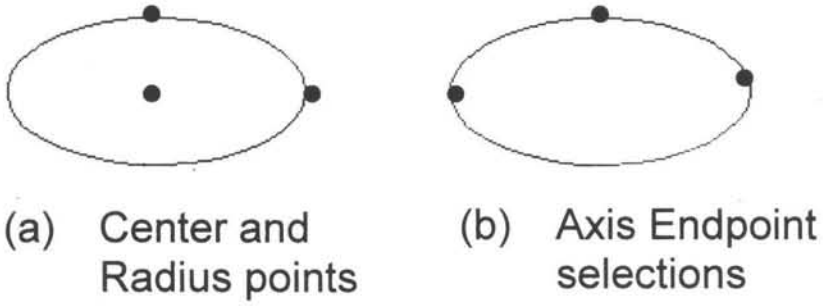

Fig. 14.26

Rotated Ellipse (Fig. 14.27)

- Created by selecting endpoints
- The first axis defined is now used as an axis of rotation that rotates the ellipse into a third dimension

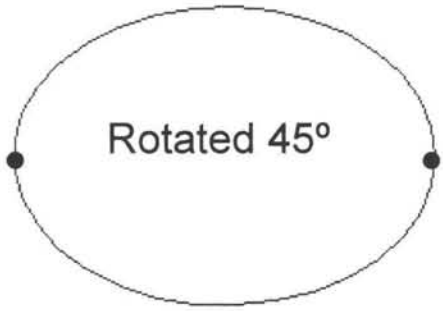

Fig. 14.27

14.10 The Drawing Tools of CADD

The following are the basic drawing tools found in a CADD program:

- Line types
- Multiple parallel lines
- Flexible curves
- Arcs and circles
- Ellipses and elliptical arcs
- Text
- Dimensions
- Hatch patterns
- Polygons
- Arrows

14.10.1 Using Line Types

There are a number of line types available in CADD that can be used to enhance drawings. There are continuous lines, dotted lines, center lines, construction lines, etc. CADD enables you to follow both geometrical and engineering drawing standards. You can use line types to represent different annotations in a drawing. For example, an engineer can use line types to differentiate between engineering services in a building plan. One line type can be used to show power supply lines, while the others to show telephone lines, water supply lines and plumbing lines.

The drawing tools

3-3

CADD is preset to draw continuous lines. When you enter the line command and indicate a starting point and end point, a continuous line is drawn. If you want to draw with another line type, you need to set that line type as the current line type. Thereafter, all the lines are drawn with the newly selected line type.

14.10.2 Drawing Multiple Parallel Lines

CADD allows you draw parallel lines simultaneously just by indicating a starting point and an end point. These lines can be used to draw something with heavy lines or double lines. For example, they can be used to draw the walls of a building plan, roads of a site map, or for any other presentation that requires parallel lines.

Most programs allow you to define a style for multiple parallel lines. You can specify how many parallel lines you need, at what distance and if they are to be filled with a pattern or solid fill. A number of add-on programs use multiple lines to represent specific drawing features. For example, an architectural program has a special function called "wall'. When you use this option, it automatically draws parallel lines representing walls of specified style and thickness.

Note:

Multiple lines are a unified entity. Even though double lines are drawn, they are treated as one line. You cannot erase or edit one line separately. However, there are functions available that can break the entities apart.

14.10.3 Drawing Flexible Curves

CADD allows you to draw flexible curves (often called splines) that can be used to draw almost any shape. They can be used to create the smooth curves of a sculpture, contours of a landscape plan or roads and boundaries of a map. To draw a flexible curve, you need to indicate the points through which the curve will pass. A uniform curve is drawn passing through the indicated points. The sharpness of the curves, the roughness of the lines and the thickness can be controlled through the use of related commands.

Drawing Arcs and Circles

CADD provides many ways to draw arcs and circles. There are a number of advanced techniques available for drawing arcs and circles, which can simplify many geometrical drawing problems. You can draw an arc by specifying circumference and radius, radius and rotation angle, chord length and radius, etc.

Arcs are drawn so accurately that a number of engineering problems can be solved graphically rather than mathematically. Suppose you need to measure the circumference of an arc, just select that arc and the exact value is displayed.

The following are basic methods for drawing arcs and circles:

(These are essentially the same methods you learn in a geometry class.

However, when drawing with CADD the approach is a little different.)

- Center point and radius
- 3 points
- Angle and radius

- 2 points
- 2 tangents and a point
- 3 tangents

14.10.4 Drawing Ellipses and Elliptical Arcs

Ellipses are much easier to draw with CADD than on a drawing board. On a drawing board, you need to find the right size template or draw a series of arcs individually to draw an ellipse. With CADD, all you need to do is specify the size of the ellipse.

The following are two basic methods for drawing ellipses:

- Length and width
- Axis and rotation angle

Note: The above topics are illustrated with Figs. in CADD PRIMER.

Adding Text to Drawings

CADD allows you to add fine lettering to your drawings. You can use text to write notes, specifications and to describe the components of a drawing. Text created with CADD is neat, stylish and can be easily edited. Typing skills are helpful if you intend to write a lot of text.

Writing text with CADD is as simple as typing it on the keyboard. You can locate it anywhere on the drawing, write it as big or as small as you like and choose from a number of available fonts.

Note:

The drawing tools

3-5

When large amounts of text are added to drawings, it slows down the screen displays. Many programs provide options to temporarily turn off text or to display text outlines only. This feature helps save computer memory and speeds up the display of screen images. The text can be turned back on whenever needed.

The following are the basic factors that control the appearance of text:

(The exact terms and procedures used vary from one program to another.)

- Text height
- Height to width ratio and inclination of letters
- Special effects
- Alignment of text (justification)
- Text fonts

Note: The above topics are illustrated with Figs. in CADD PRIMER.

Defining a Text Style

As discussed, there are a number of factors that control the appearance of text. It is time-consuming to specify every parameter each time you need to write text. CADD allows you to define text styles that contain all the text information such as size, justification and font. When you need to write text, simply select a particular style and all the text thereafter is written with that style. CADD offers a number of ready-made text styles as well.

Important Tip

There are a number of add-on programs available that can make working with text faster and easier. These programs provide basic word-processing capabilities that can be used to write reports and make charts. They provide access to a dictionary and thesaurus database that can be used to check spelling and to search for alternative words.

Drawing Dimensions

CADD's dimensioning functions provide a fast and accurate means for drawing dimensions. To draw a dimension, all you need to do is to indicate the points that need to be dimensioned. CADD automatically calculates the dimension value and draws all the necessary annotations.

The annotations that form a dimension are: dimension line, dimension text, dimension terminators and extension lines (see fig.). You can control the appearance of each of these elements by changing the dimensioning defaults.

The following are the common methods for drawing dimensions:

- Drawing horizontal and vertical dimensions
- Dimensioning from a base line
- Dimensioning arcs and circles
  CADD PRIMER: http://www.caddprimer.com
  3-6
- Drawing dimensions parallel to an object
- Dimensioning angles

Note: The above topics are illustrated with Figs. in CADD PRIMER.

Adding Hatch Patterns to Drawings

The look of CADD drawings can be enhanced with the hatch patterns available in CADD. The patterns can be used to emphasize portions of the drawing and to represent various materials, finishes, and spaces. Several ready-made patterns are available in CADD that can be instantly added to drawings.

Hatch patterns are quite easy to draw. You don't need to draw each element of a pattern one by one. You just need to specify an area where the pattern is to be drawn by selecting all the

drawing objects that surround the area. The selected objects must enclose the area completely, like a closed polygon. When the area is enclosed, a list of available patterns is displayed. Select a pattern, and the specified area is filled. (Illustrated with Fig. In CADD PRIMER)

Drawing Symbols

Symbols provide a convenient way to draw geometrical shapes. You may compare this function with the multi-purpose templates commonly used on a drawing board. To draw a geometrical shape, such as a pentagon or hexagon, select an appropriate symbol from the menu, specify the size of the symbol, and it is drawn at the indicated point. (Illustrated with Fig. In CADD PRIMER)

Drawing Arrows

Arrows (or pointers) in a drawing are commonly used to indicate which note or specification relates to which portion of the drawing, or to specify a direction for any reason. There are several arrow styles available in CADD programs. You can choose from simple two-point arrows to arrows passing through a number of points, and from simple to fancy arrow styles. To draw an arrow, you need to indicate the points through which the arrow will pass. (Illustrated with Fig)

The Command Line Box

- There are two basic ways to input a command:
  - The command line
  - Clicking on a command icon. The command icons will execute the appropriate text based command on the command line
- Additionally some commands have a keyboard shortcut option that normally involves the "cntrl" or "alt" keys on the keyboard
- The command line box size can be changed to show more or fewer command lines

Basic Commands

- The "Draw" Toolbar
  - Lines
  - Polylines
  - Circles
  - Arcs
- The "Modify" Toolbar
  - Erase
  - Copy
  - Move
  - Offset
  - Fillet

- Array
- Trim
- Extend

Using the Help function

- AutoCAD has a good command reference in it's help function.
- This presentation will not duplicate that reference. You should frequently refer to the command reference as you learn the various commands.
- Some practical pointers are added here that may not be easily encountered in the command reference.

Drawing Lines

- Either type "line" on the command line or click on the line icon in the draw toolbar.
- Lines can be drawn by point and click.
  - Can keep an eye on the coordinates display to make sure that you get what you want.
- Lines can be specified by their end point coordinates.
  - Type in the coordinates on the command line
- Lines can be specified by their first point coordinates, then by an distance and angle.
  - Select starting point, type in "@distance<angle"
  - Example: @5<45 would go 5 units at a 45 degree angle
- Click the line icon (or enter "line" on the command line)
- Draw a horizontal line whose left end coordinate is 0,.5 and is 5 inches long.
- Continue the line so that the second segment is starts at the end of the first line and goes vertically up 1.5 inches

The Copy Command

- The copy command is used to make a single duplicate of an entity or group of entities.
- Click on copy icon in the modify menu and follow the instructions on the command line.
- Note that copy offsets may be independent of the actual line

Selecting Objects

- AutoCAD has several ways to select objects.
  - Click on each object that you want to select.
  - Make a window that encloses all the objects that you want to select.
- Click on the lower or upper LEFT corner of desired window area
- Click on the opposite corner of the window area
  - Make a boundary that selects every thing that is within the boundary and that CROSSES the boundary.
- Click on the lower or upper RIGHT corner of desired window area
- Click on the opposite corner of the window area

Methods of selecting draw commands

Pull-down menu

Tool Bar

Command name typed at command line

Command alias typed at command line

C = circle command

L = line command

A = arc command

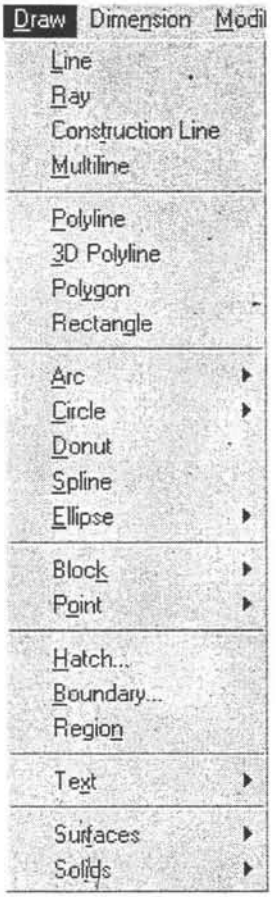

WORKSHEETS

"This page is Intentionally Left Blank"

Study the Isometric Views in Figs. 1 to 24 and draw the Orthographic Views required.

Arrow indicates the direction of view.

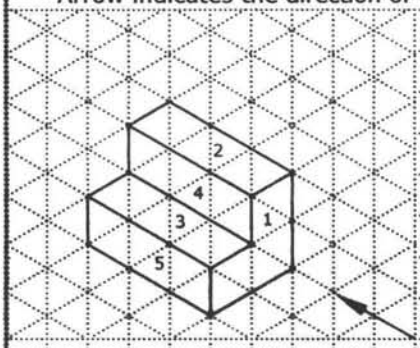

Fig.1

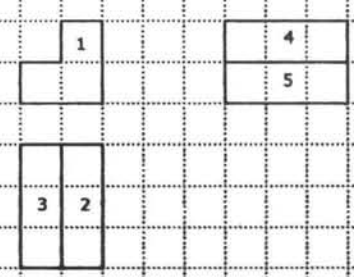

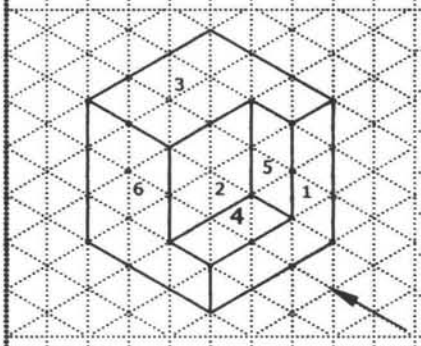

Fig.2

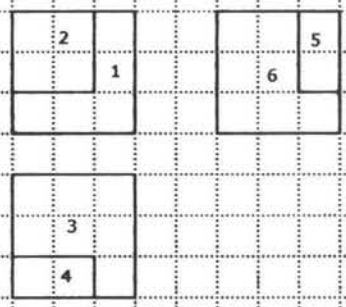

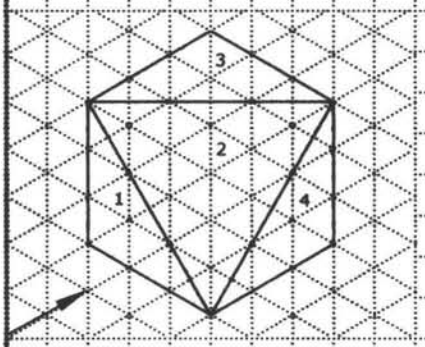

Fig.3

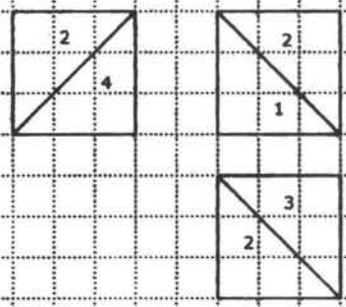

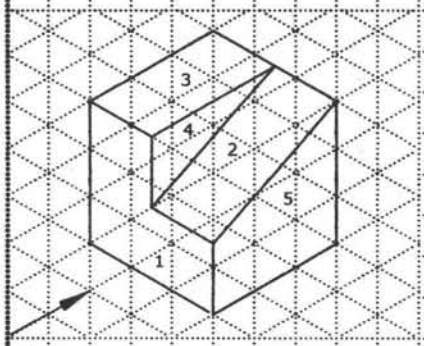

Fig.4

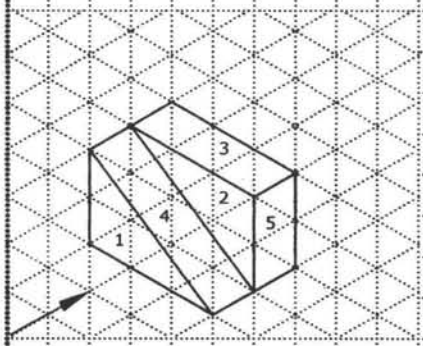

Fig.5

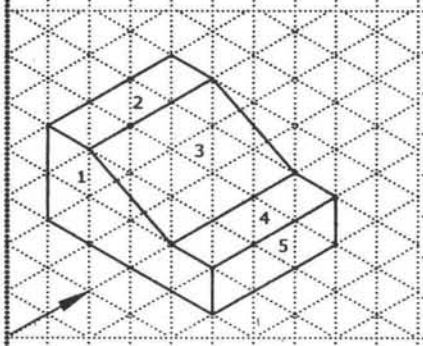

Fig.6

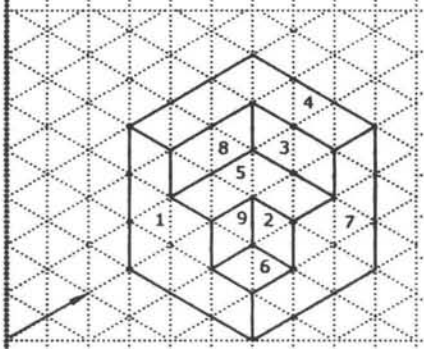

Fig.7

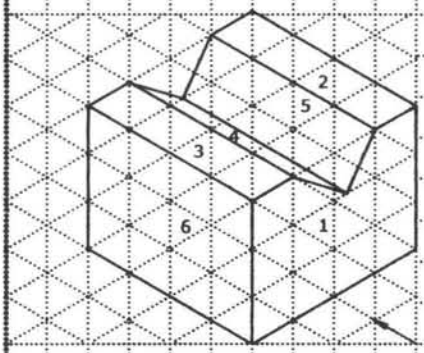

Fig.8

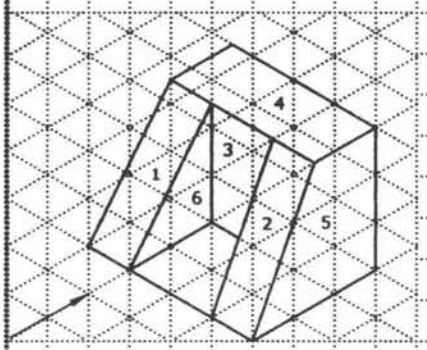

Fig.9

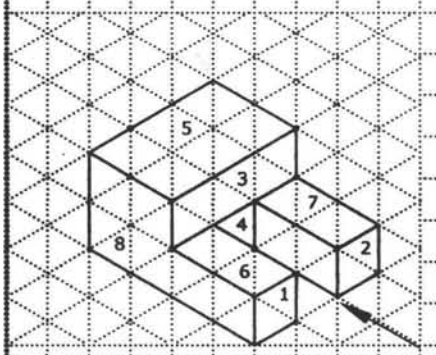

Fig.10

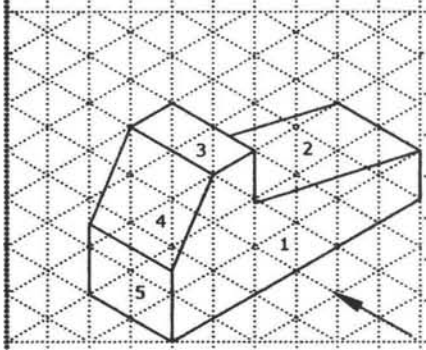

Fig.11

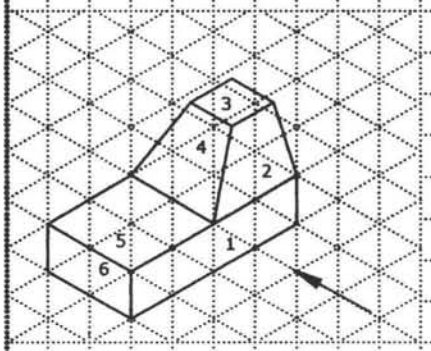

Fig.12

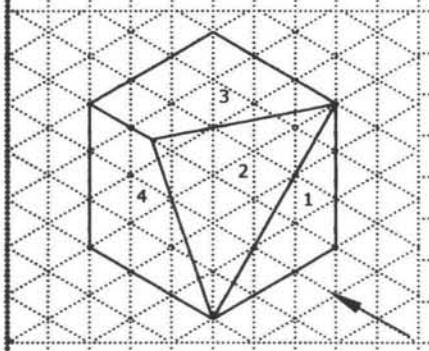

Fig.13

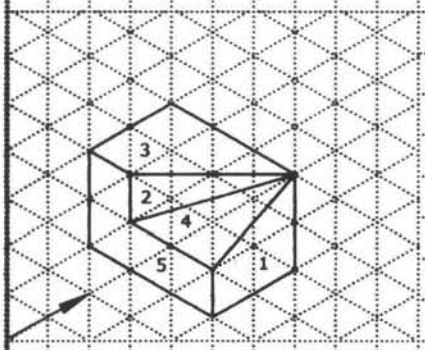

Fig.14

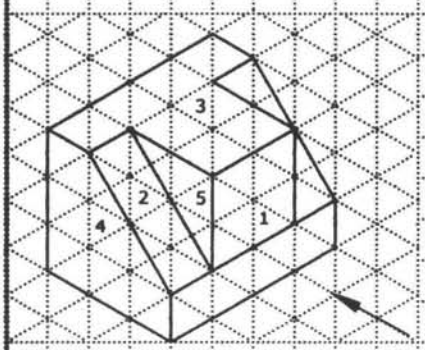

Fig.15

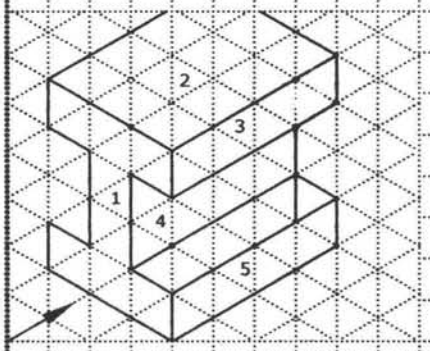

Fig.16

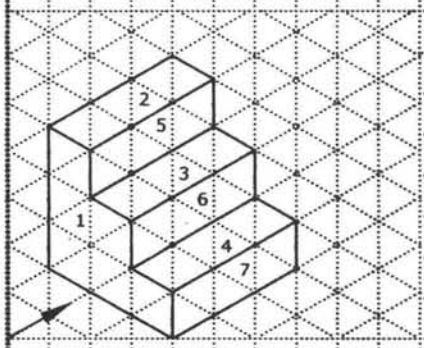

Fig.17

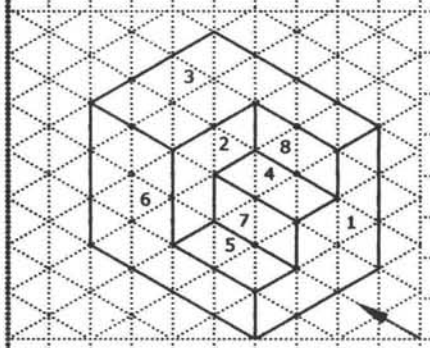

Fig.18

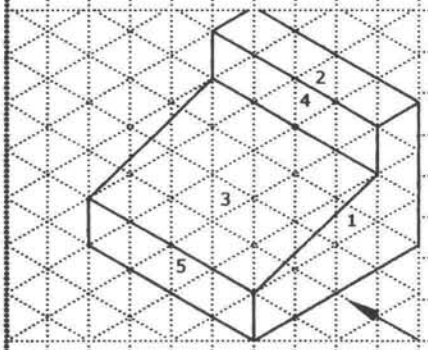

Fig.19

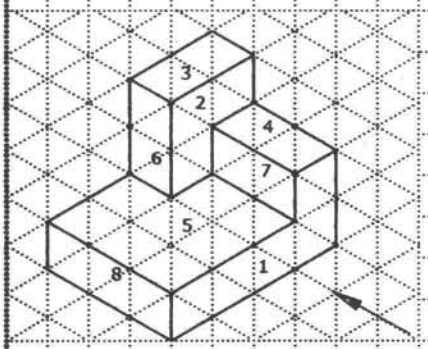

Fig.20

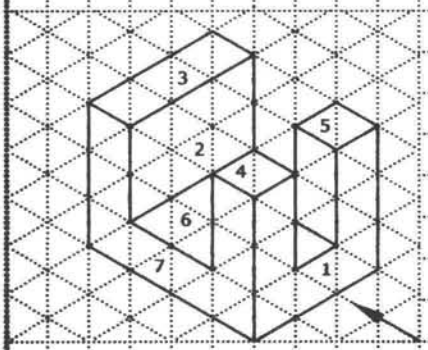

Fig.21

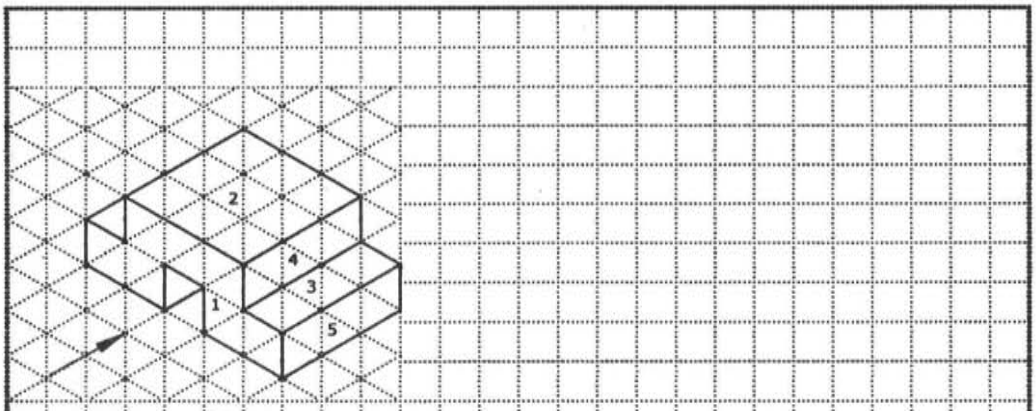

Fig.22

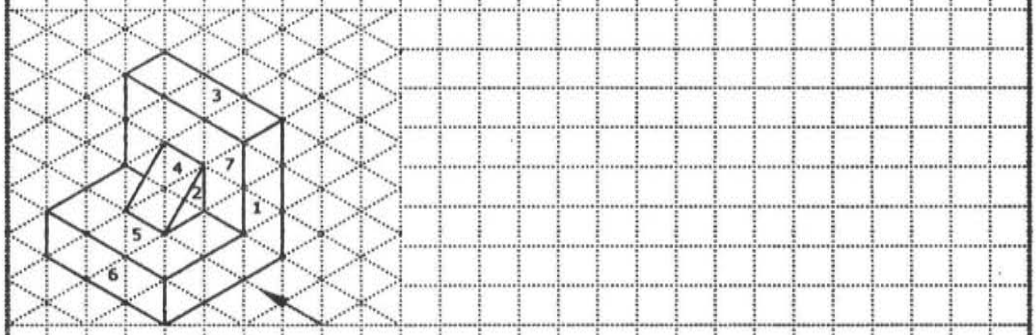

Fig.23

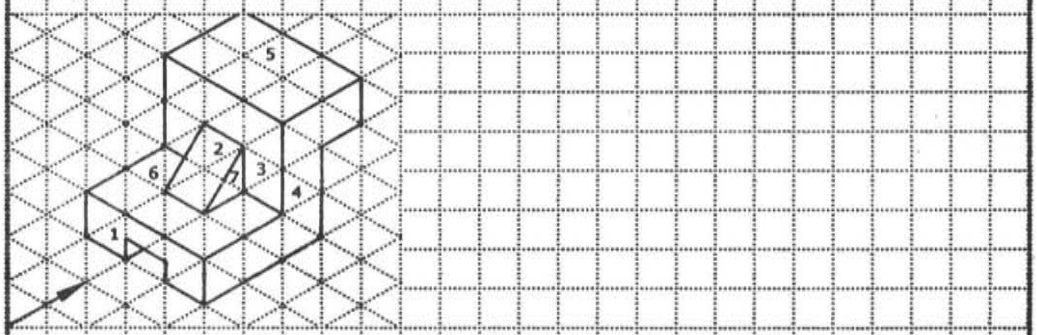

Fig.24

MISSING LINE(S)

Study the Isometric and Orthographic Views in Figs. 25 to 33.

Complete the views Marked 'X' by drawing the Missing Lines.

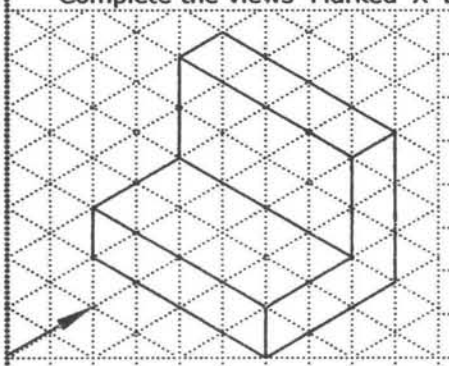

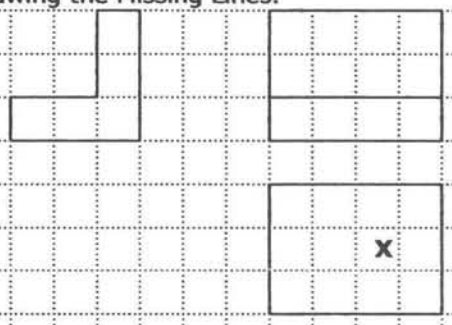

Fig.25

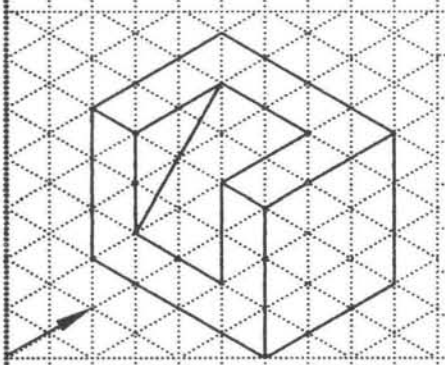

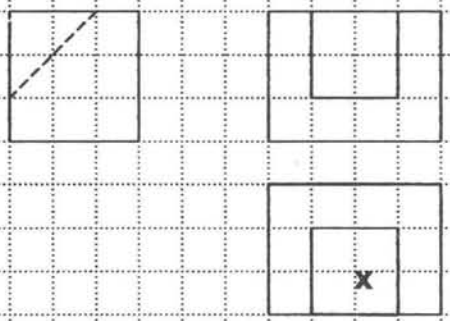

Fig.26

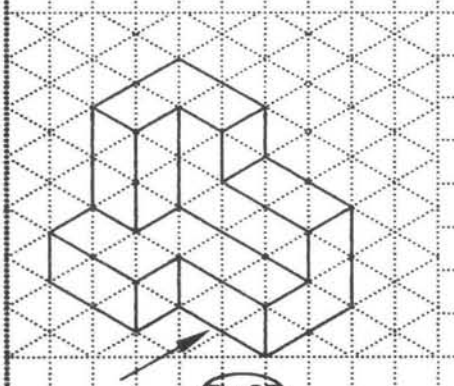

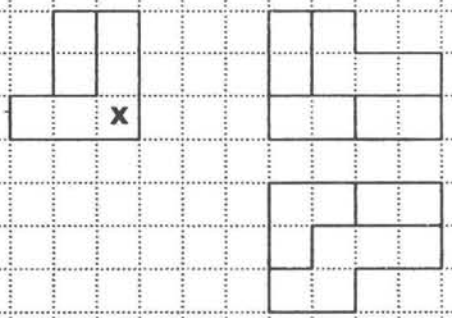

Fig.27

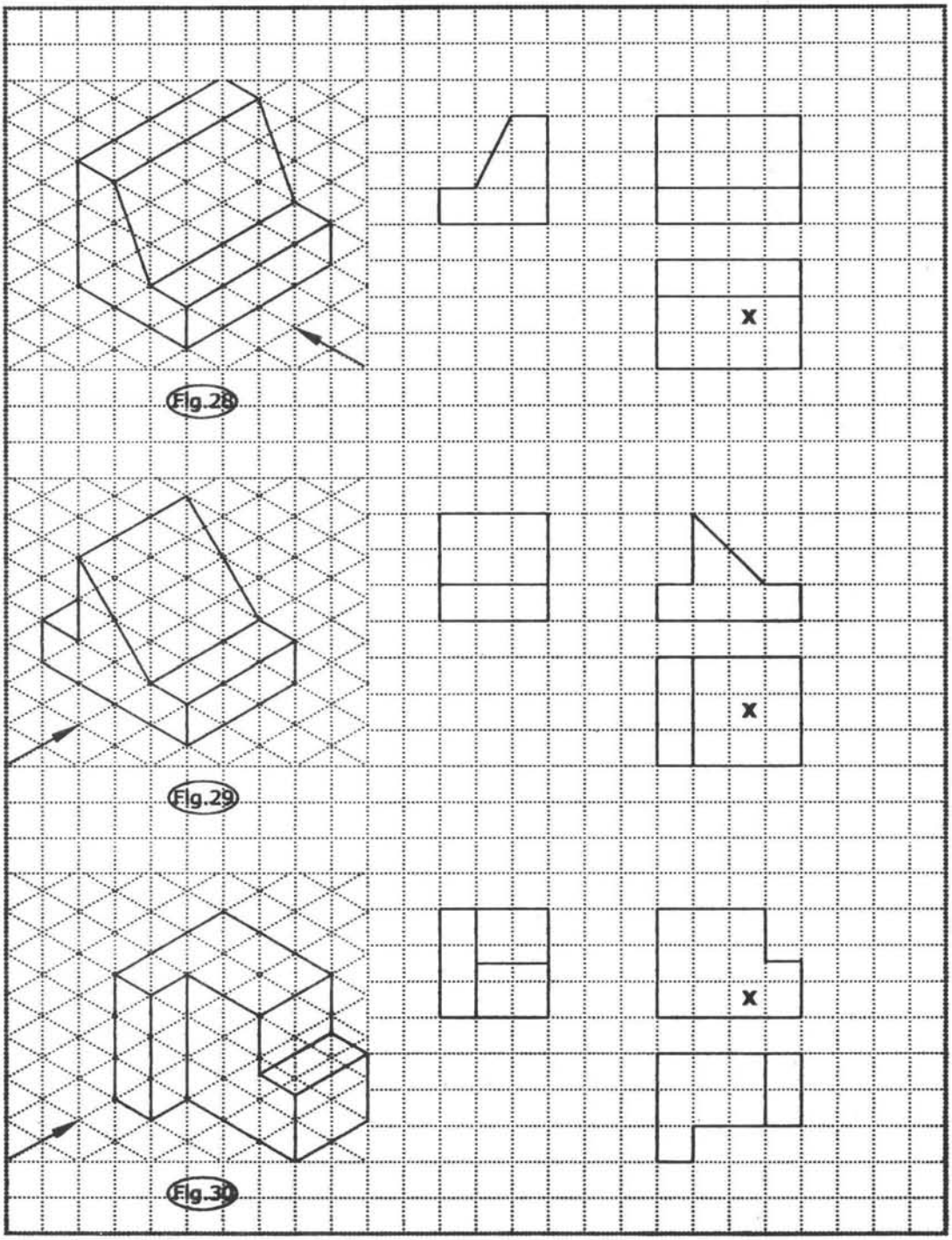
Fig.28
X
Fig.29
X
Fig.30
X

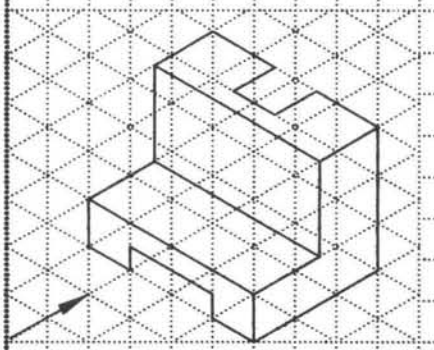

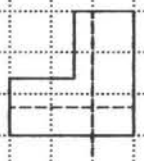

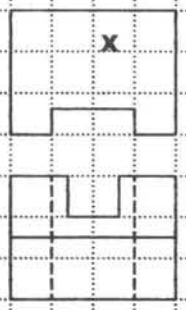

Fig.31

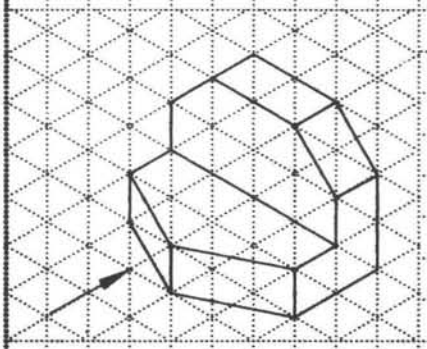

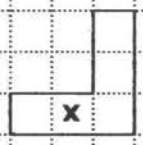

Fig.32

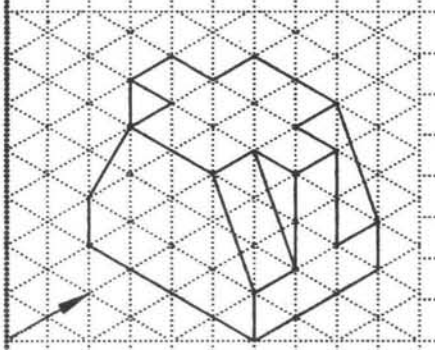

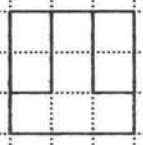

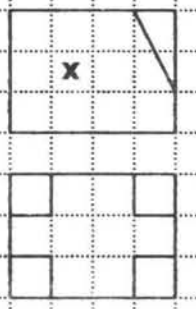

Fig.33

MISSING VIEWS

Study the Isometric and Orthographic Views in Figs.34 to 54 and draw the Missing views.

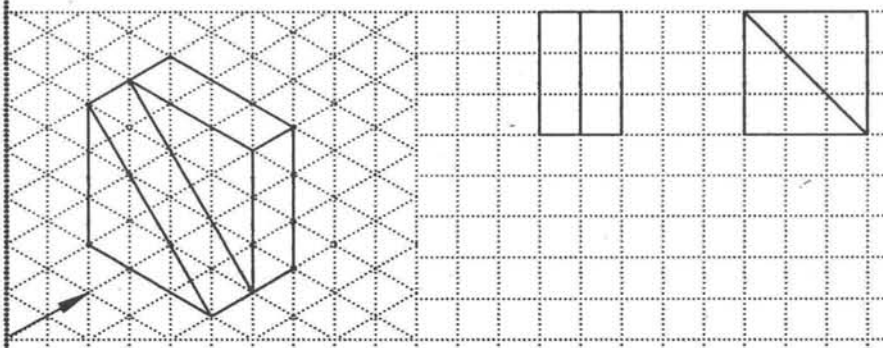

Fig.34

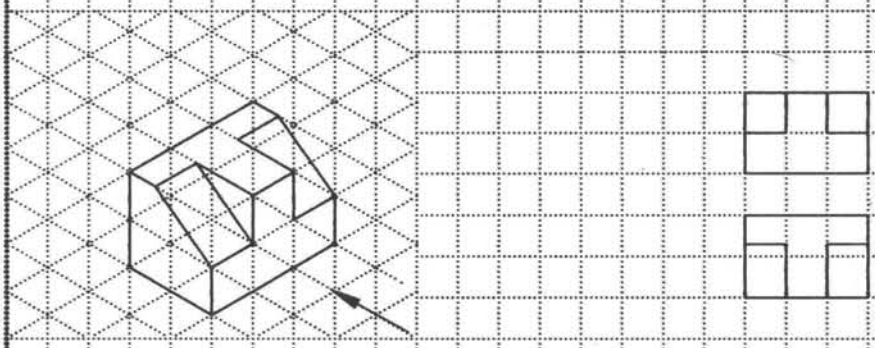

Fig.35

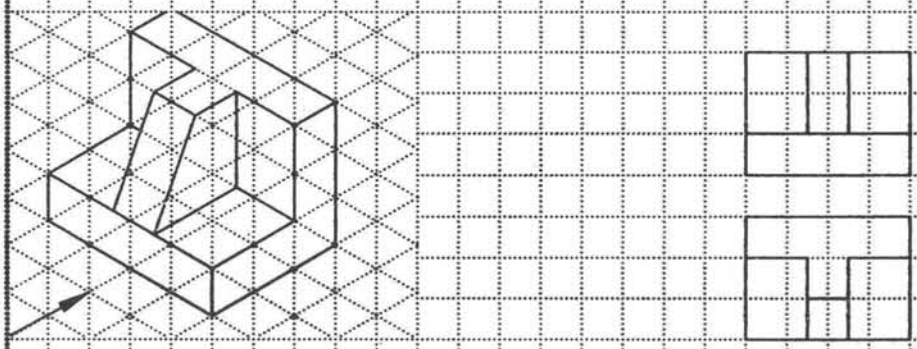

Fig.36

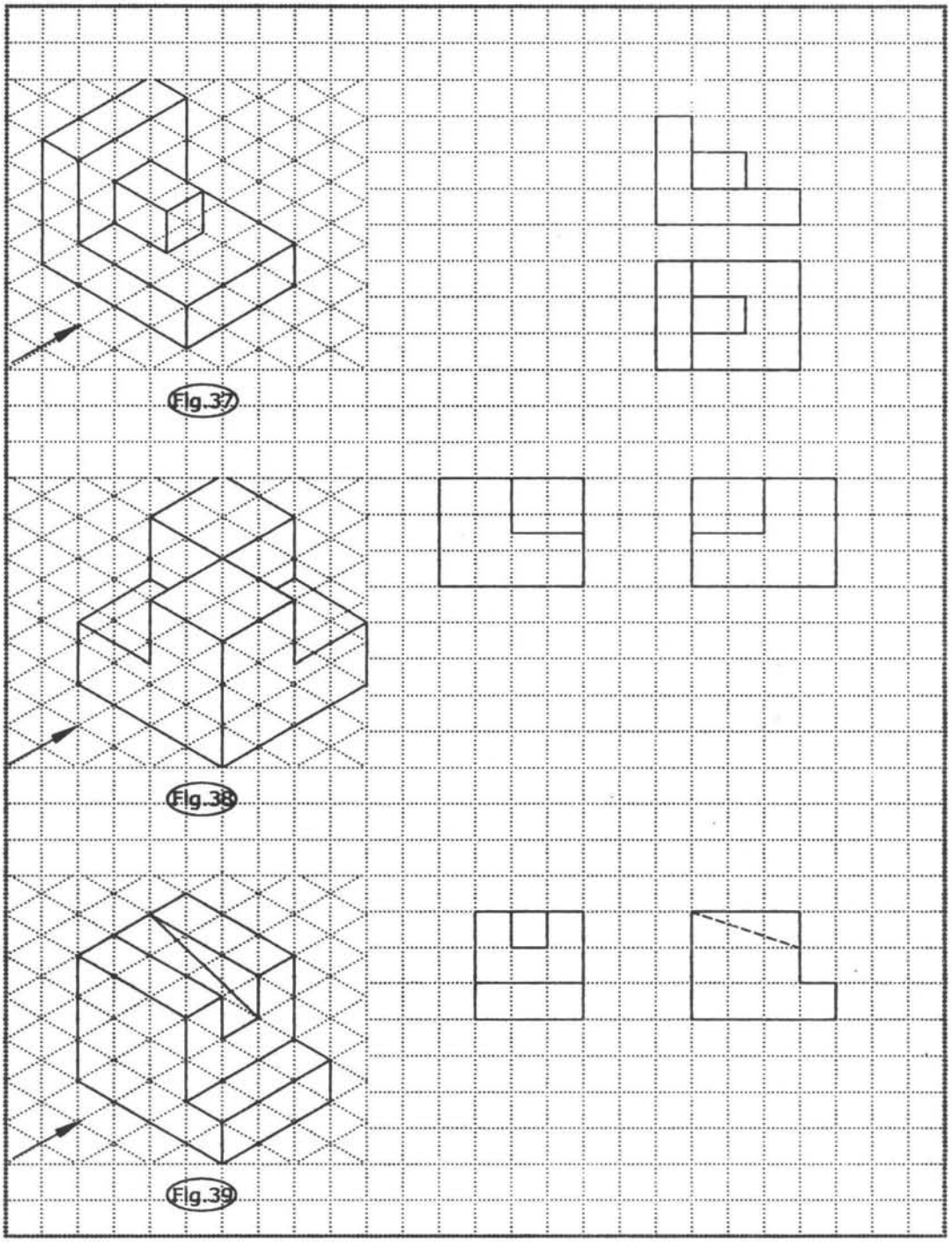

Fig.37

Fig.38

Fig.39

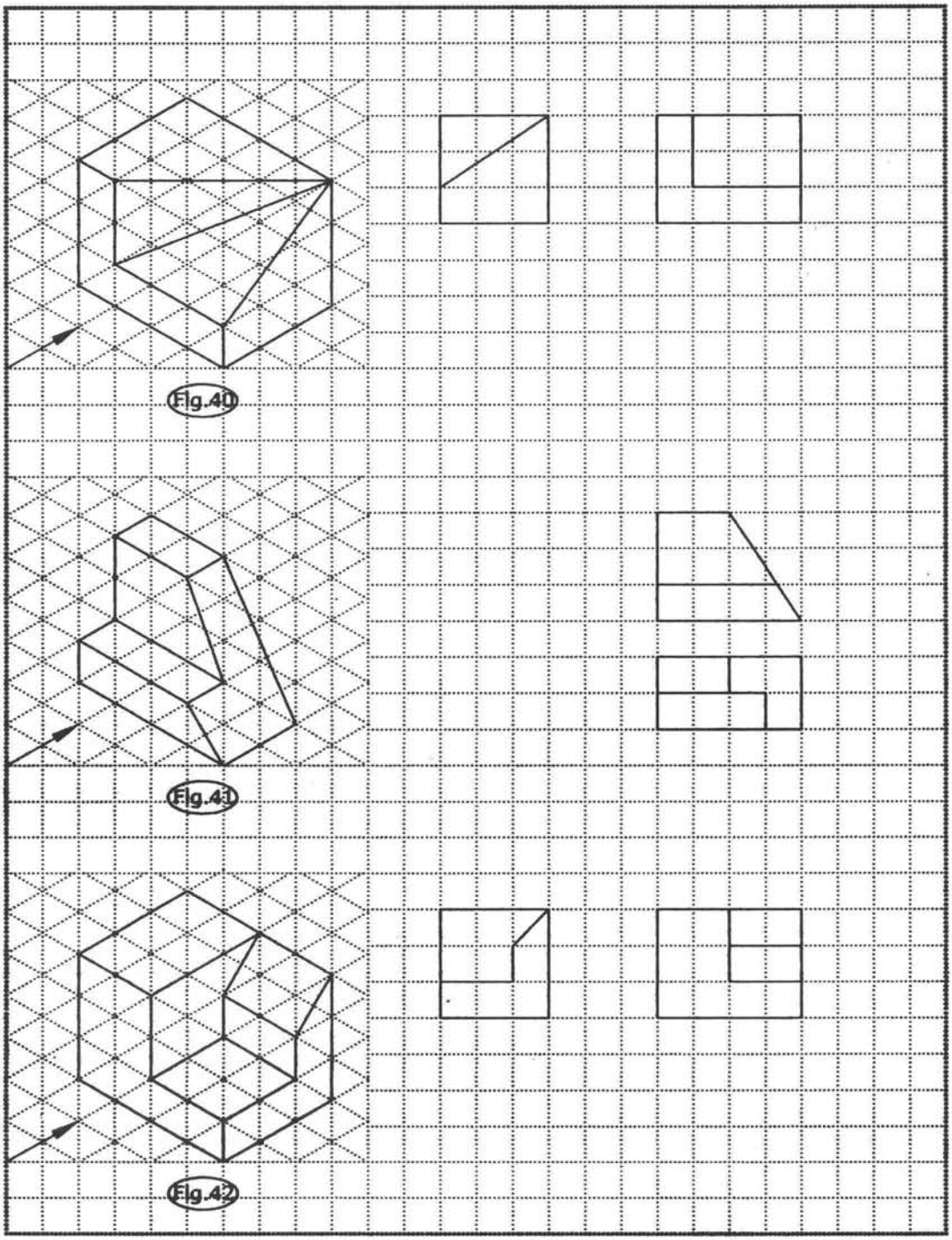

Fig.40

Fig.41

Fig.42

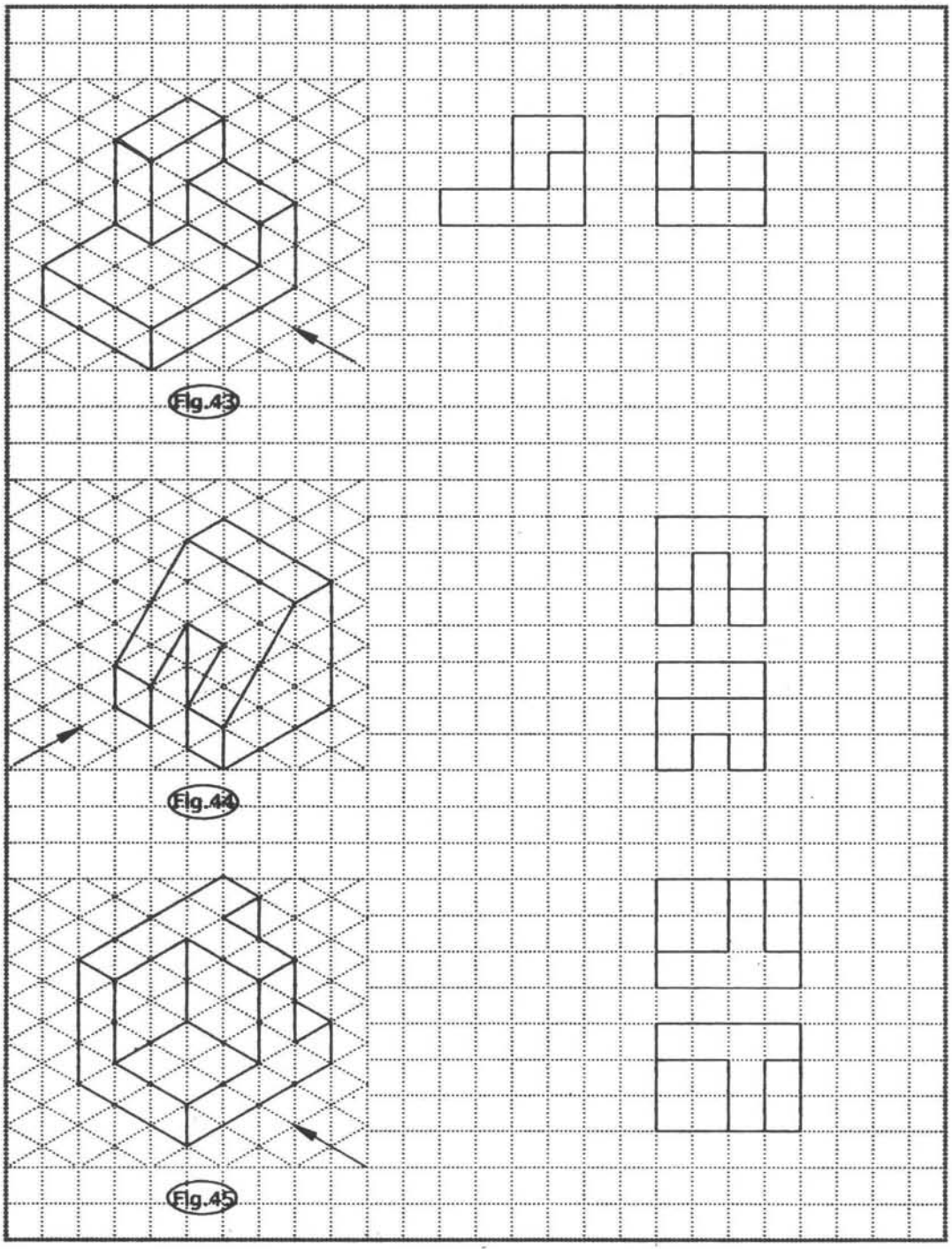

Fig.43

Fig.44

Fig.45

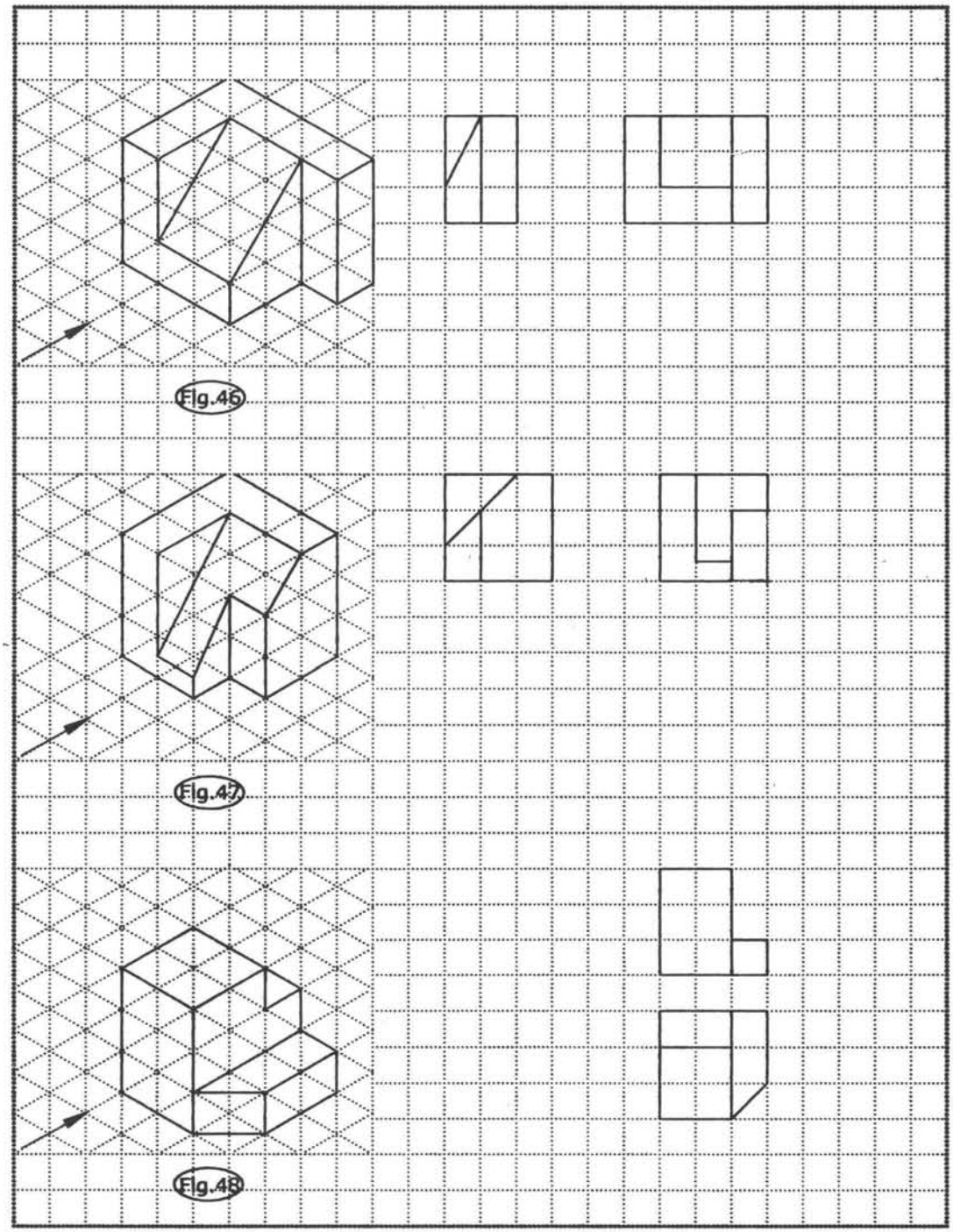

Fig.46

Fig.47

Fig.48

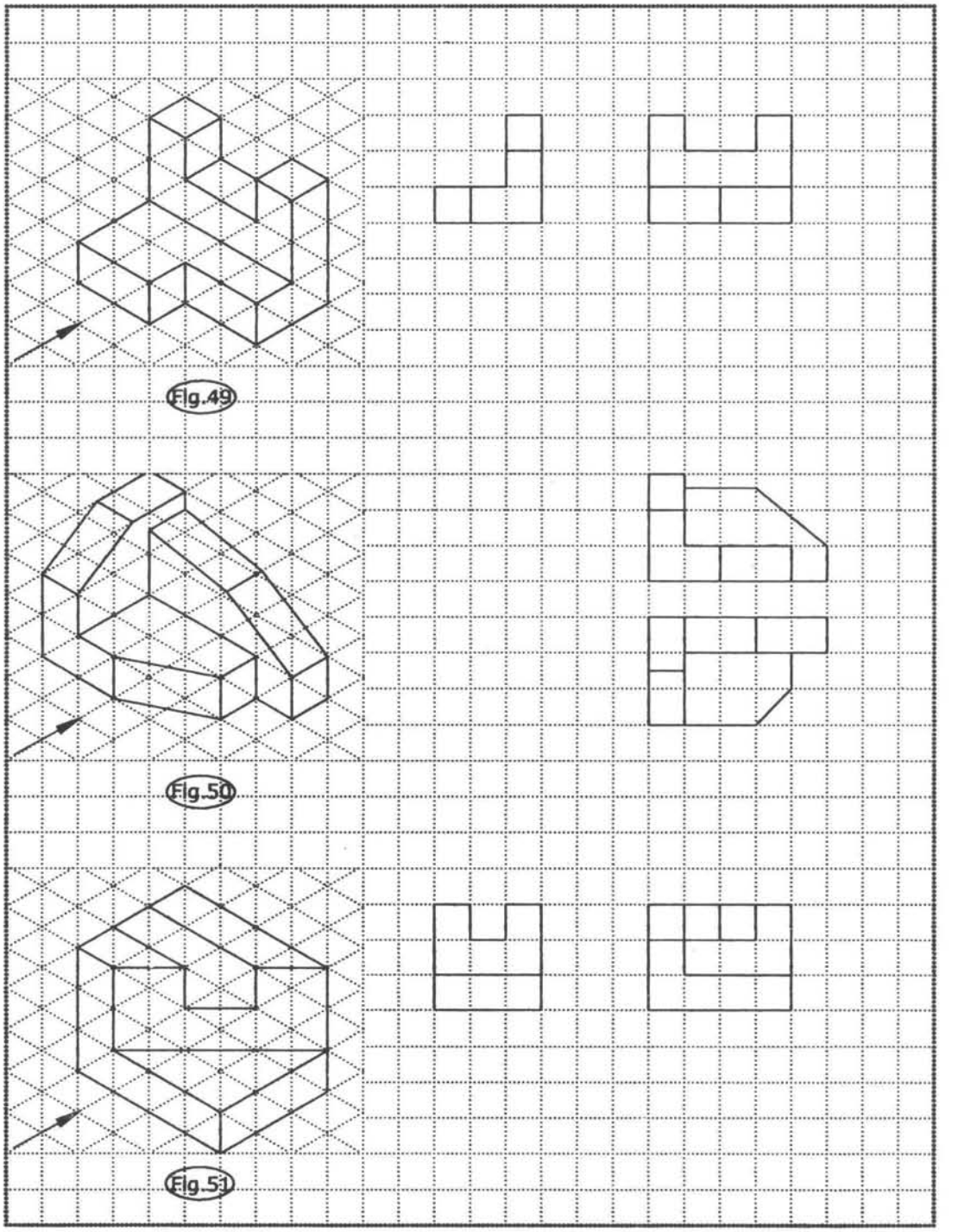

Fig.49

Fig.50

Fig.51

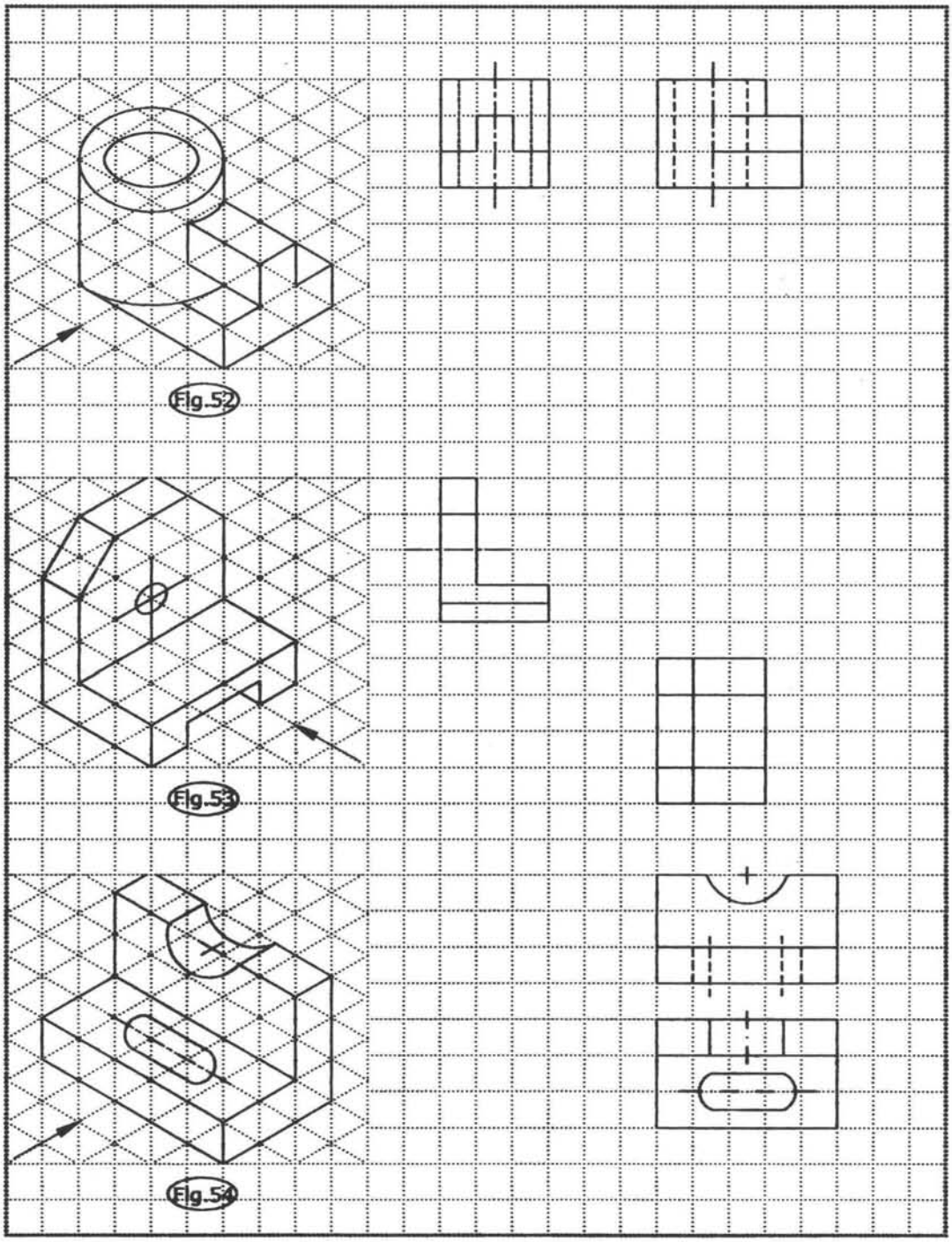

Fig.52

Fig.53

Fig.54

Study the Isometric views in Figs. 55 to 75 and draw their orthographic views.

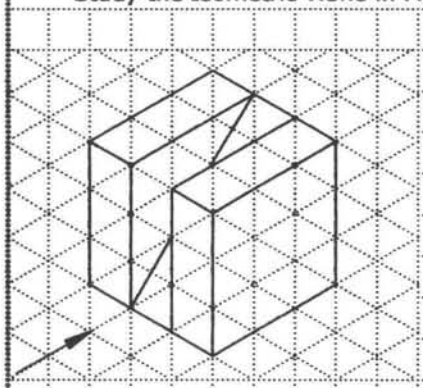

Fig.55

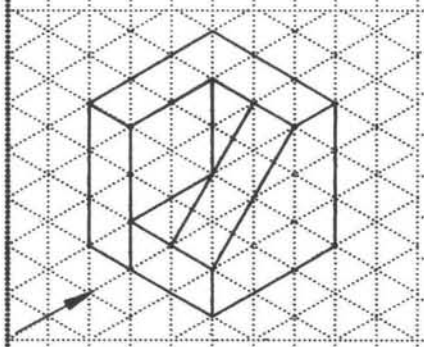

Fig.56

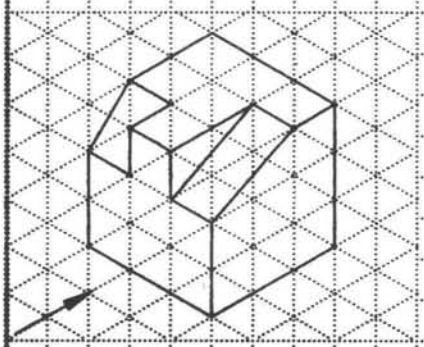

Fig.57

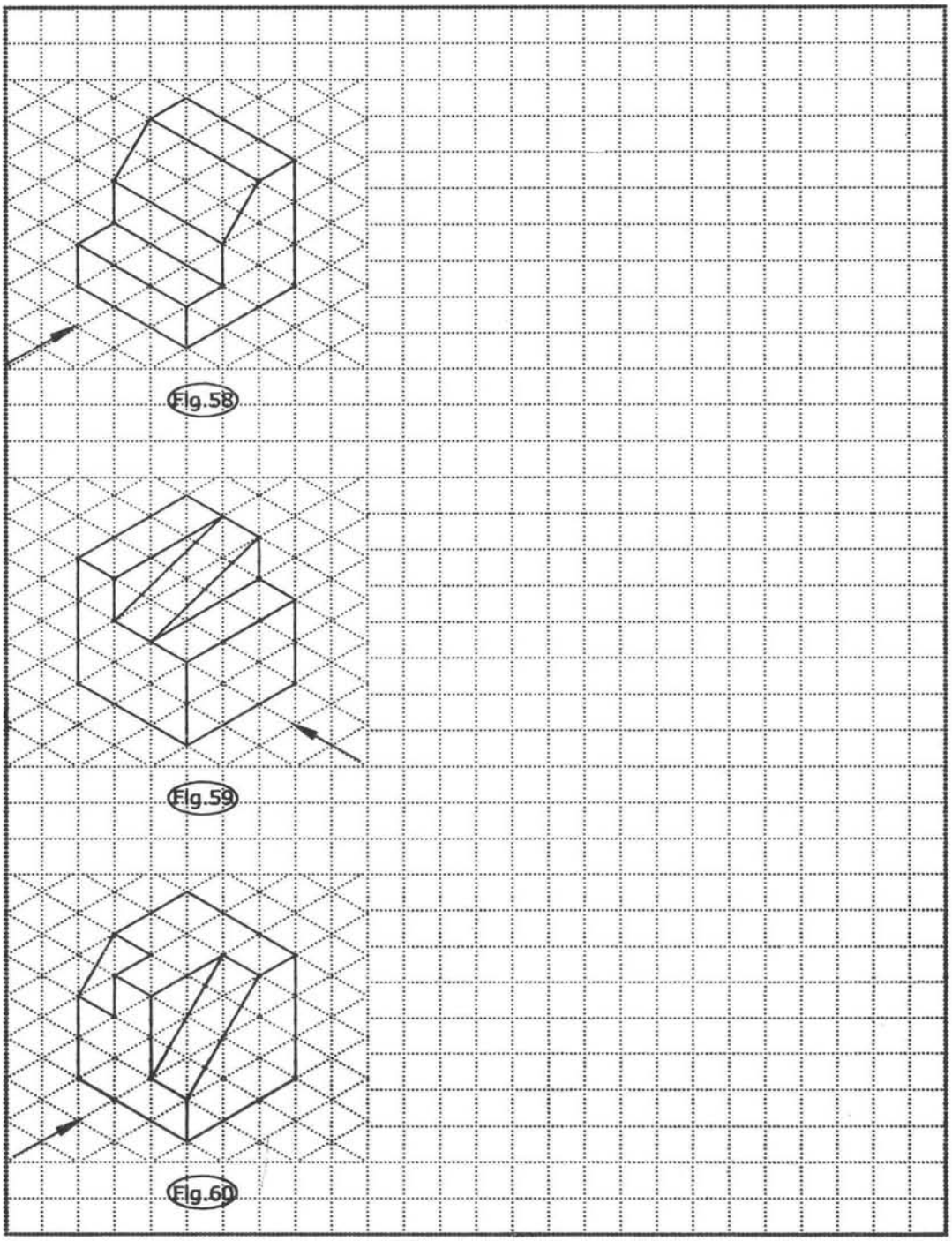

Fig.58

Fig.59

Fig.60

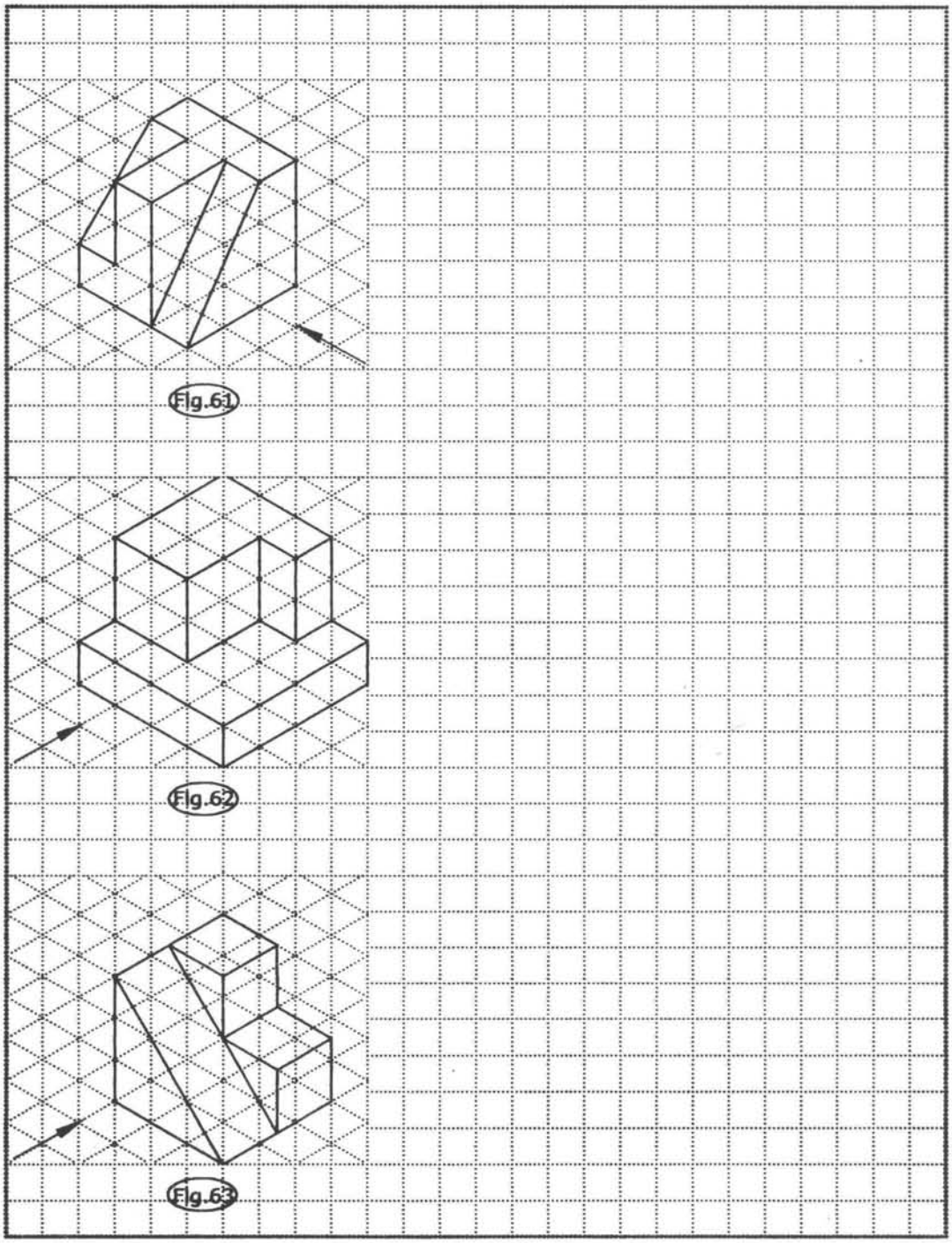

Fig.61

Fig.62

Fig.63

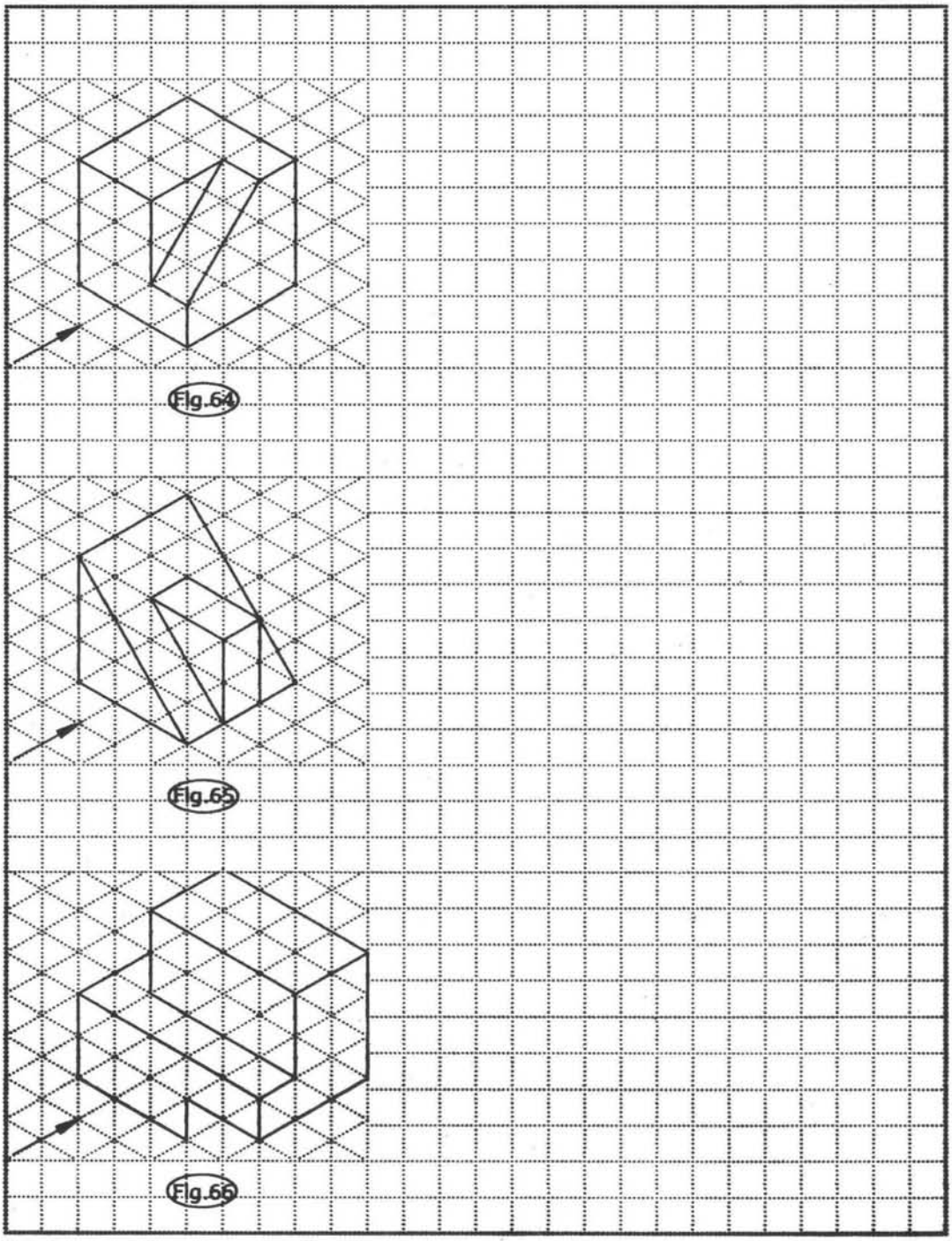

Fig.64

Fig.65

Fig.66

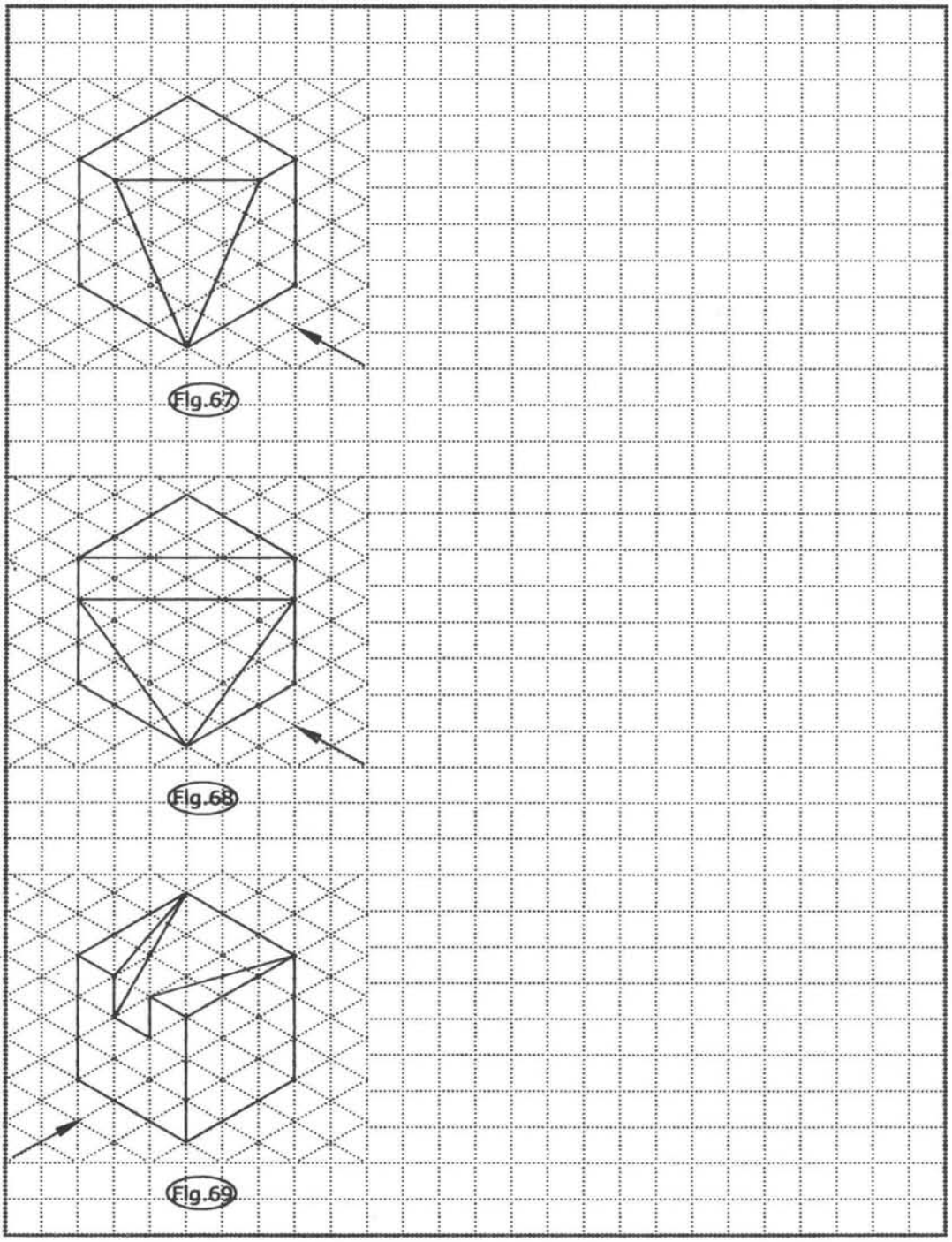

Fig.67

Fig.68

Fig.69

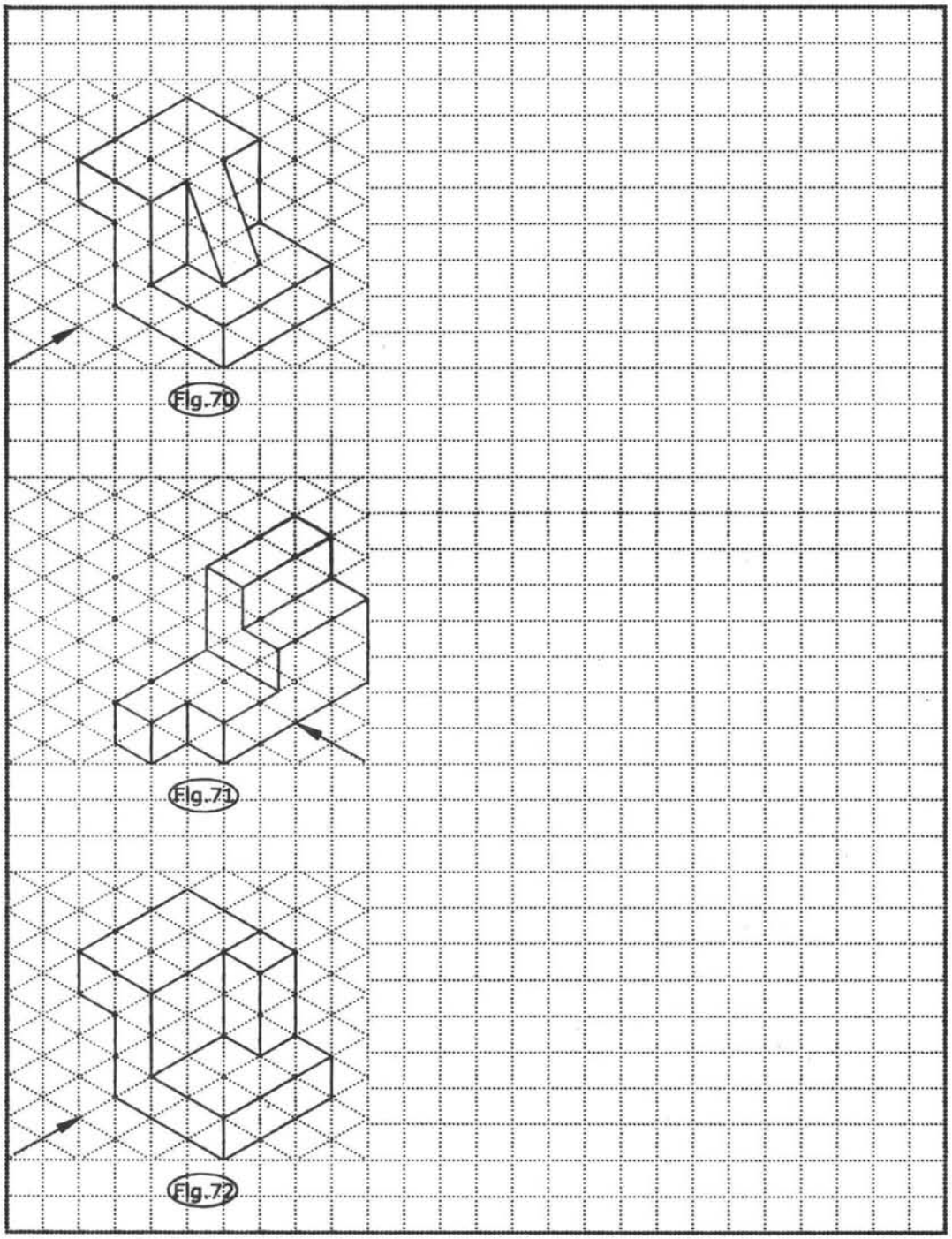

Fig.70

Fig.71

Fig.72

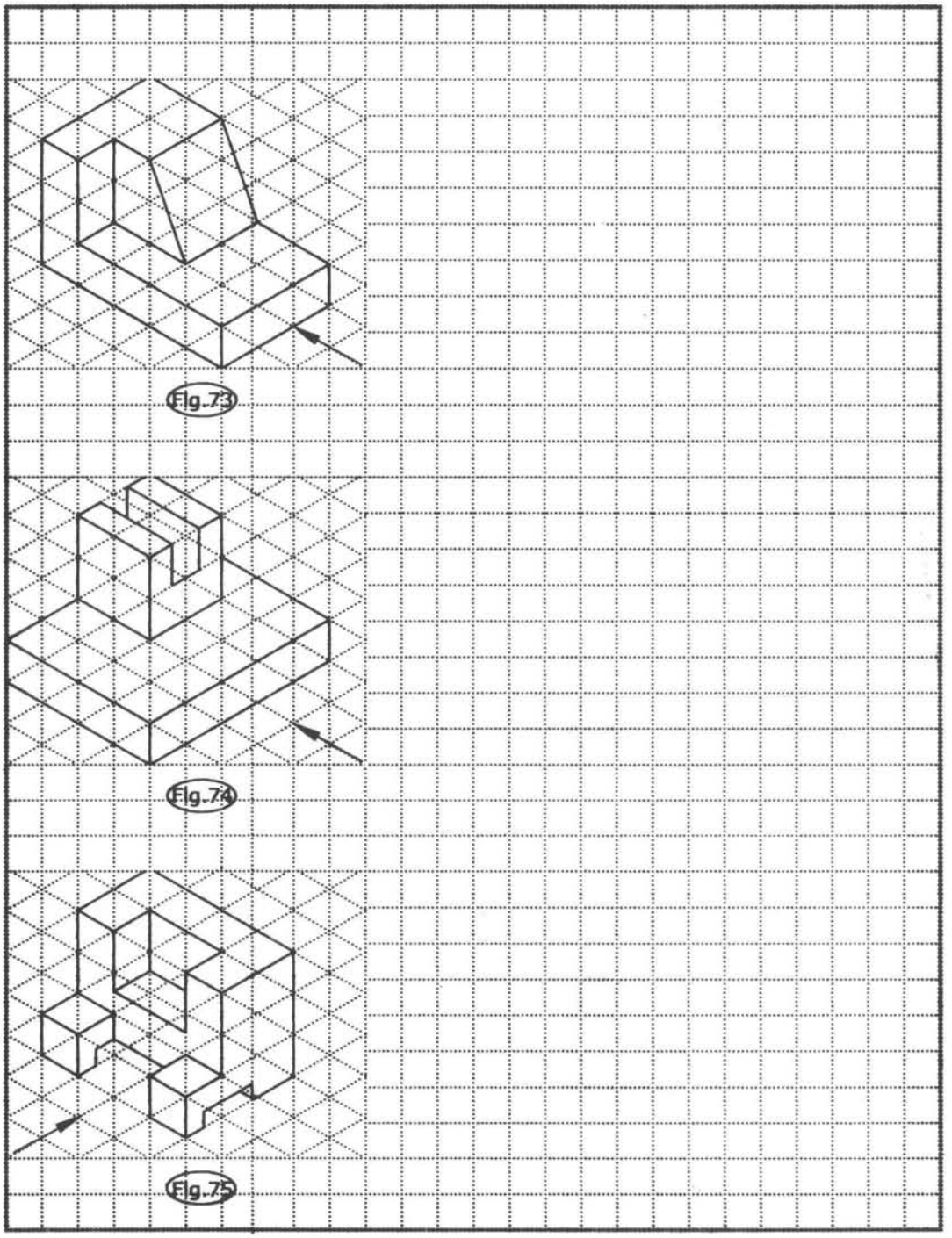

Fig.73

Fig.74

Fig.75

Study the orthographic views in Figs. 76 to 96 and draw their Isometric views.

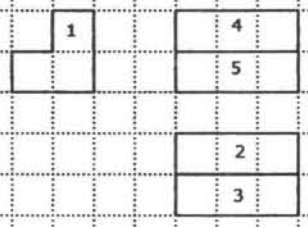

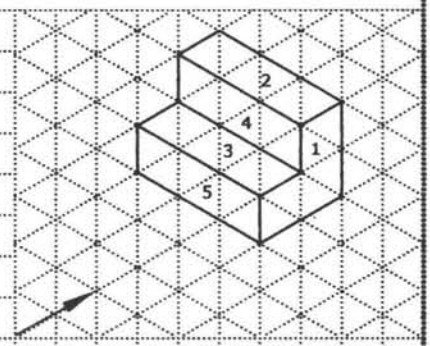

Fig.76

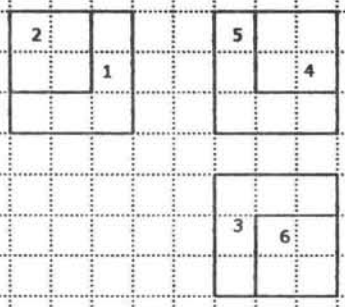

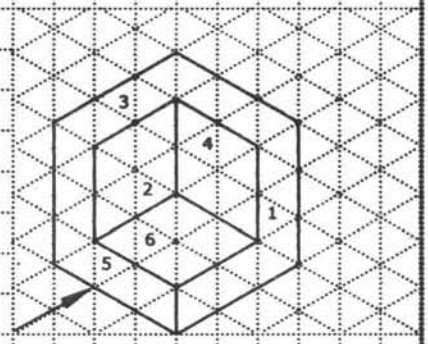

Fig.77

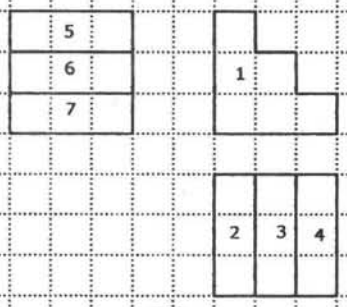

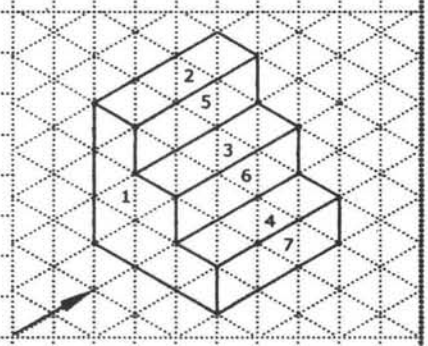

Fig.78

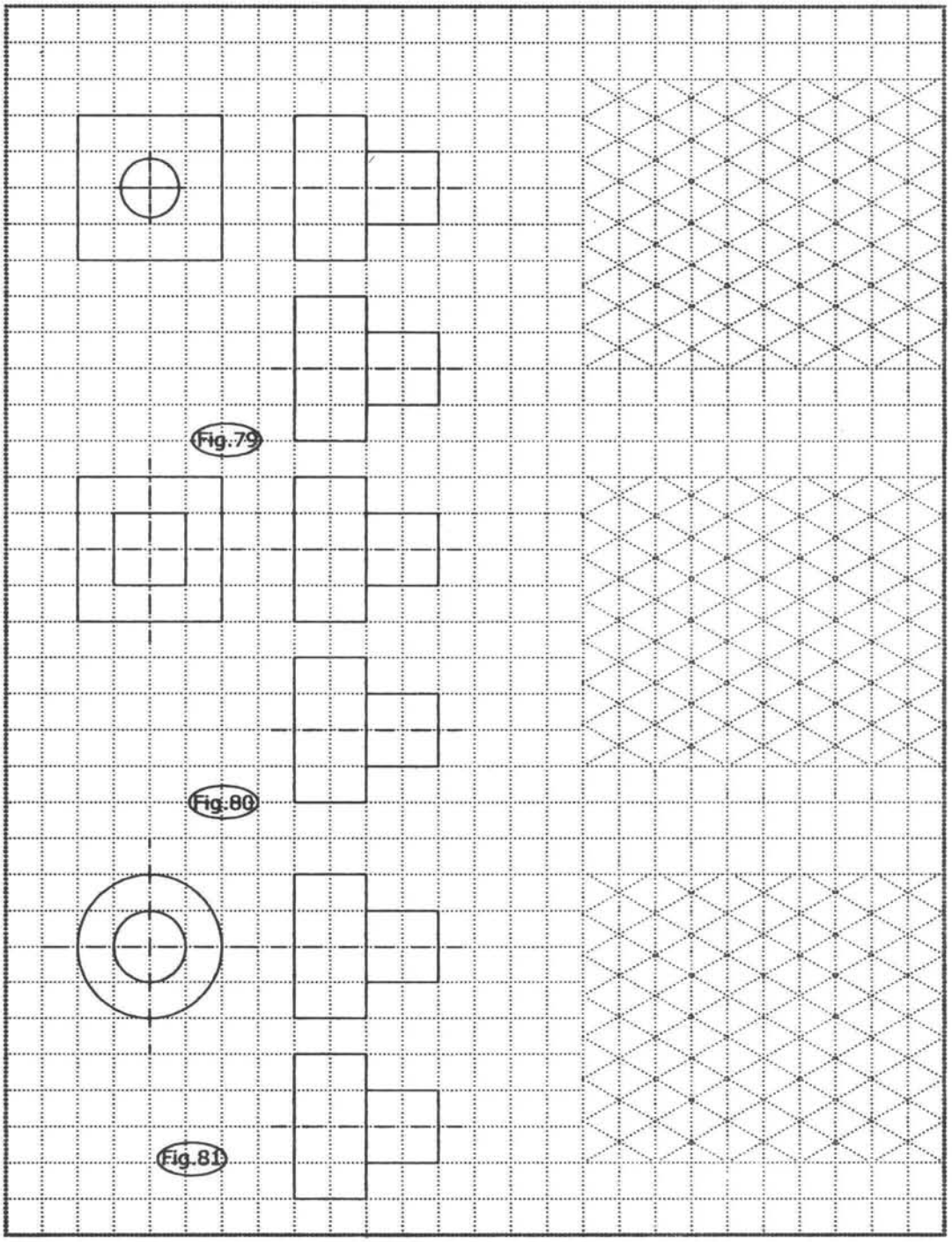
Fig.79
Fig.80
Fig.81

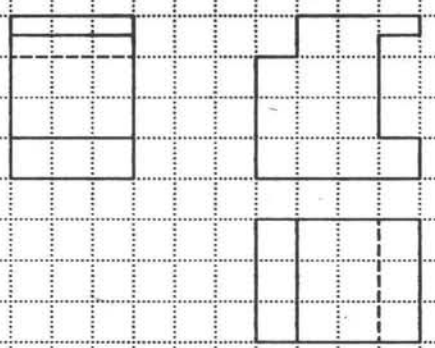

Fig.82

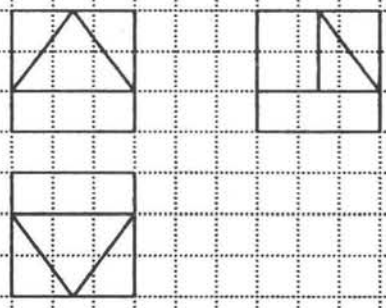

Fig.83

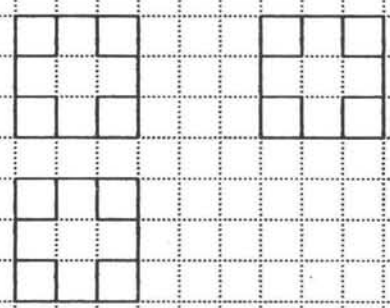

Fig.84

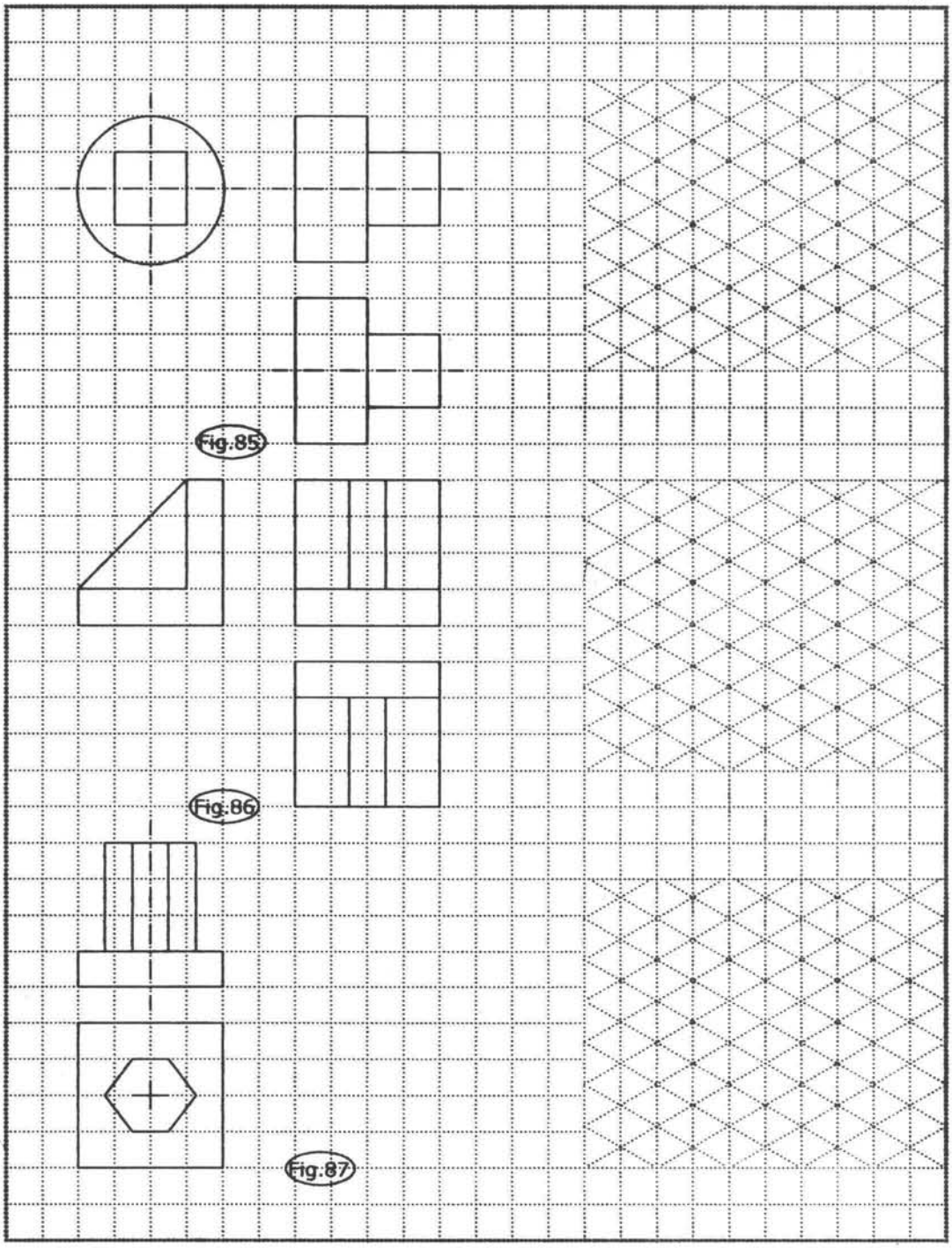
Fig.85
Fig.86
Fig.87

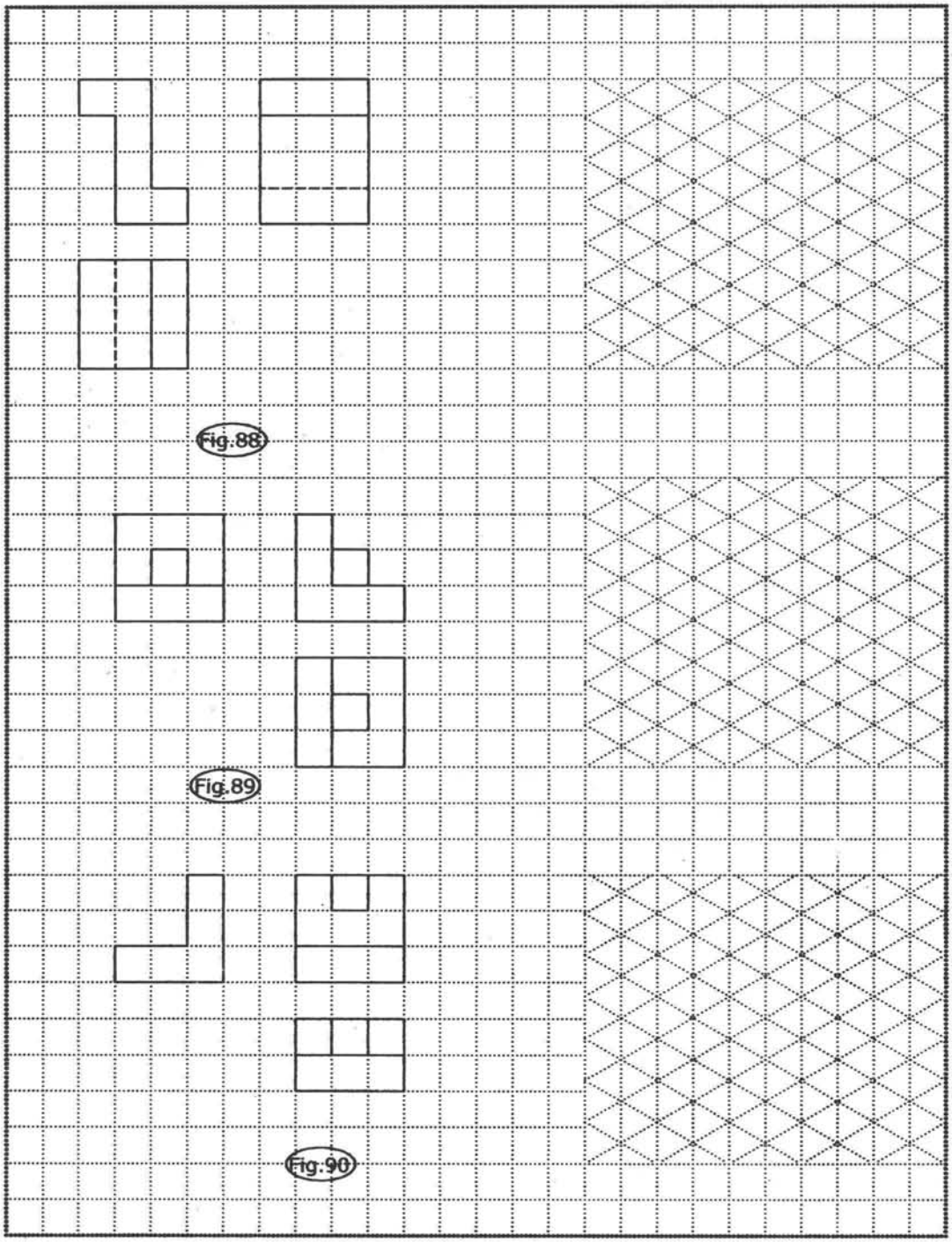
Fig.88
Fig.89
Fig.90

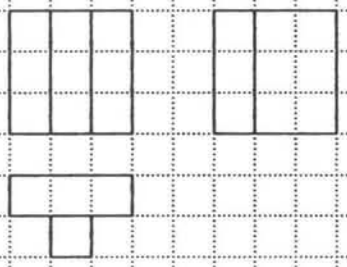

Fig.91

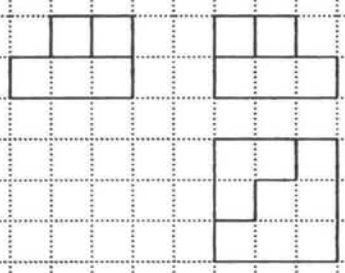

Fig.92

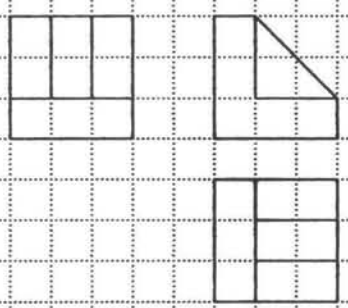

Fig.93

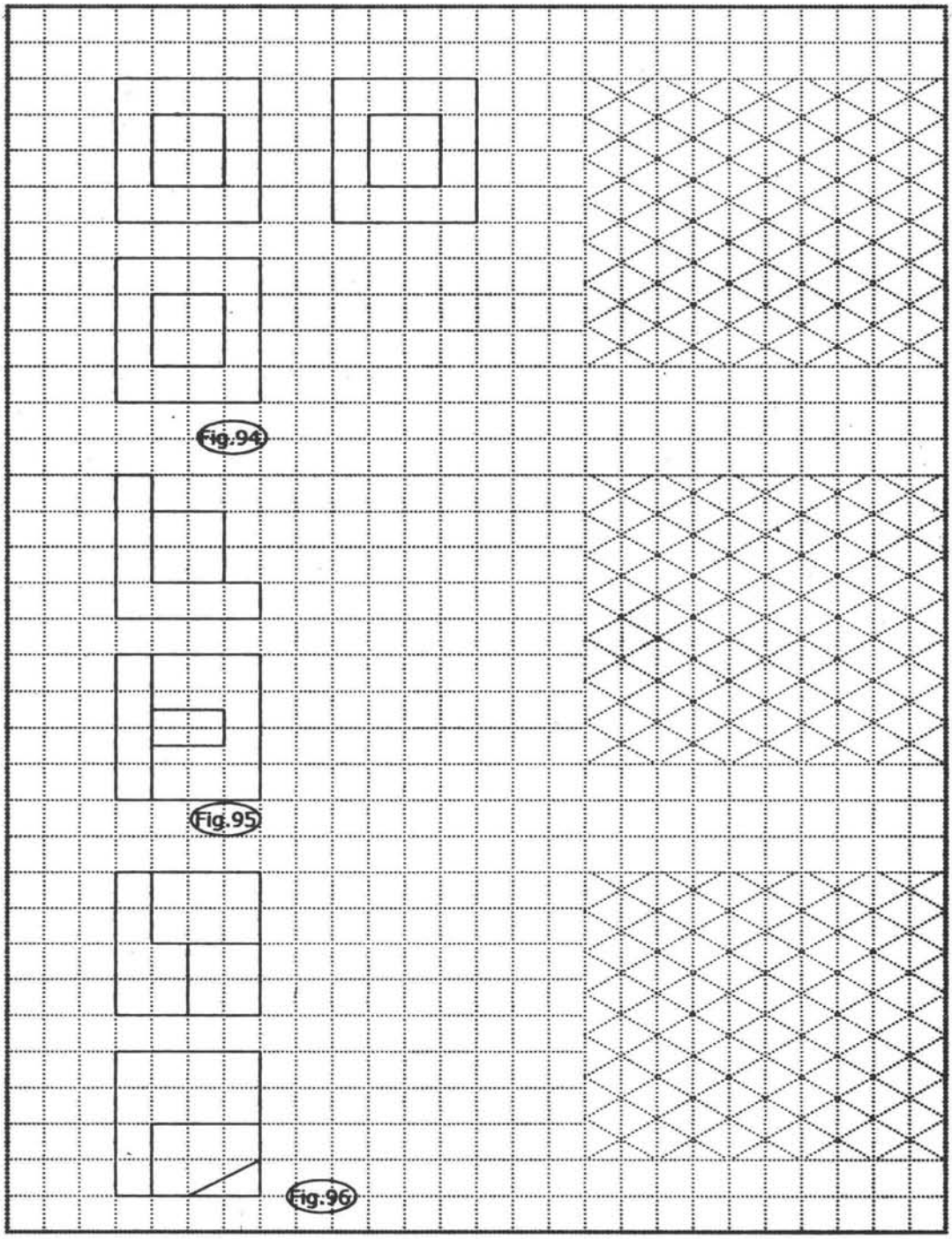
Fig.94
Fig.95
Fig.96

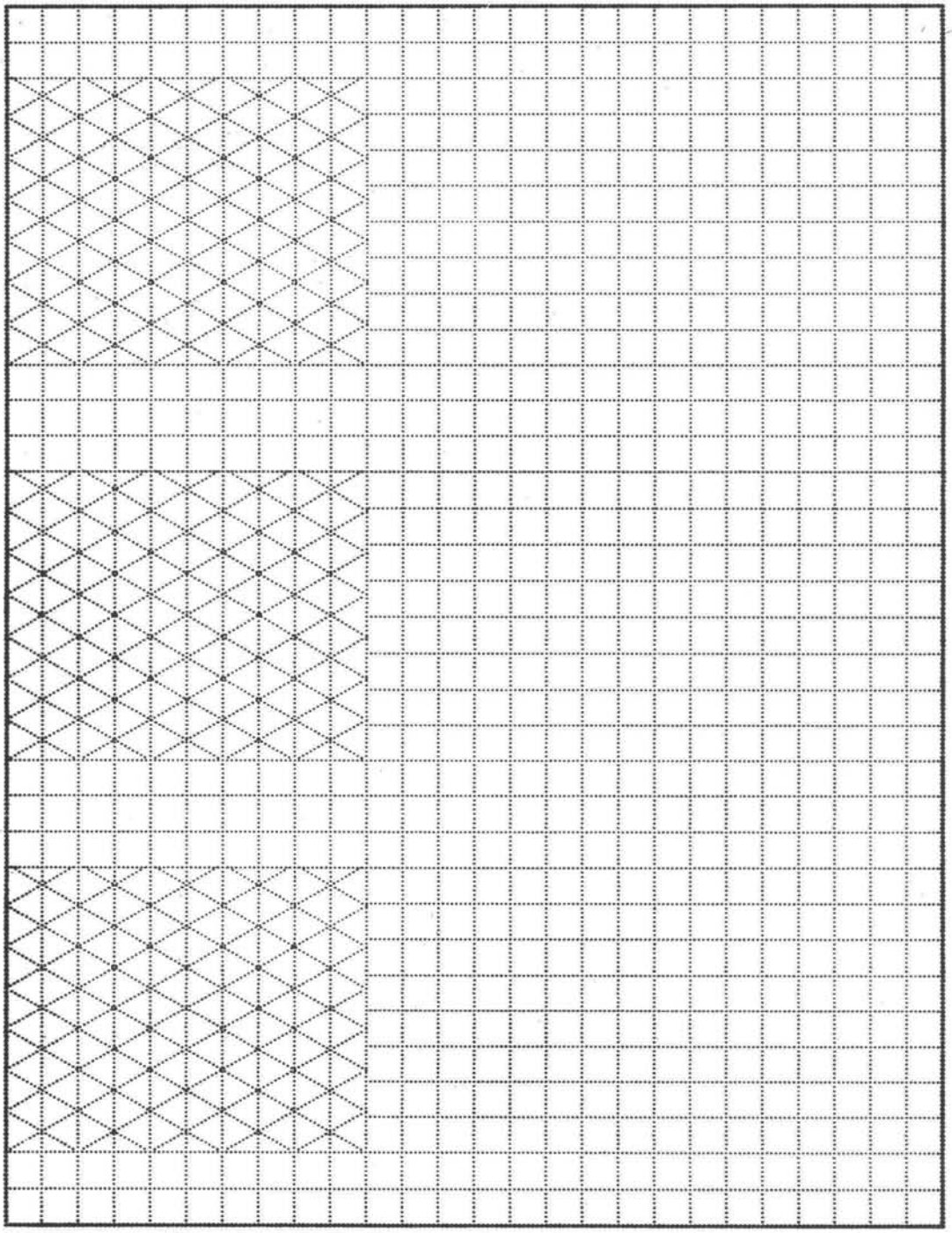

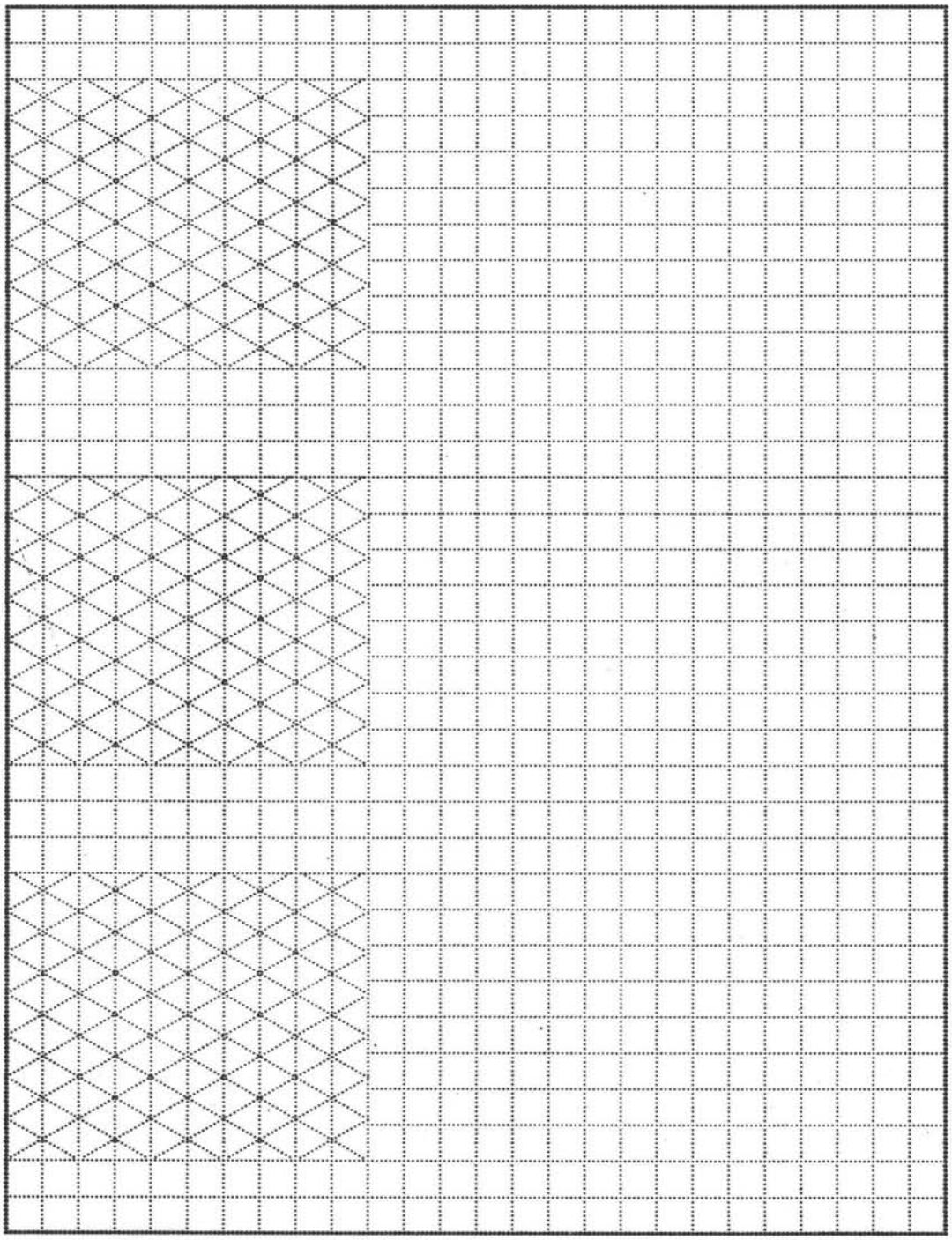

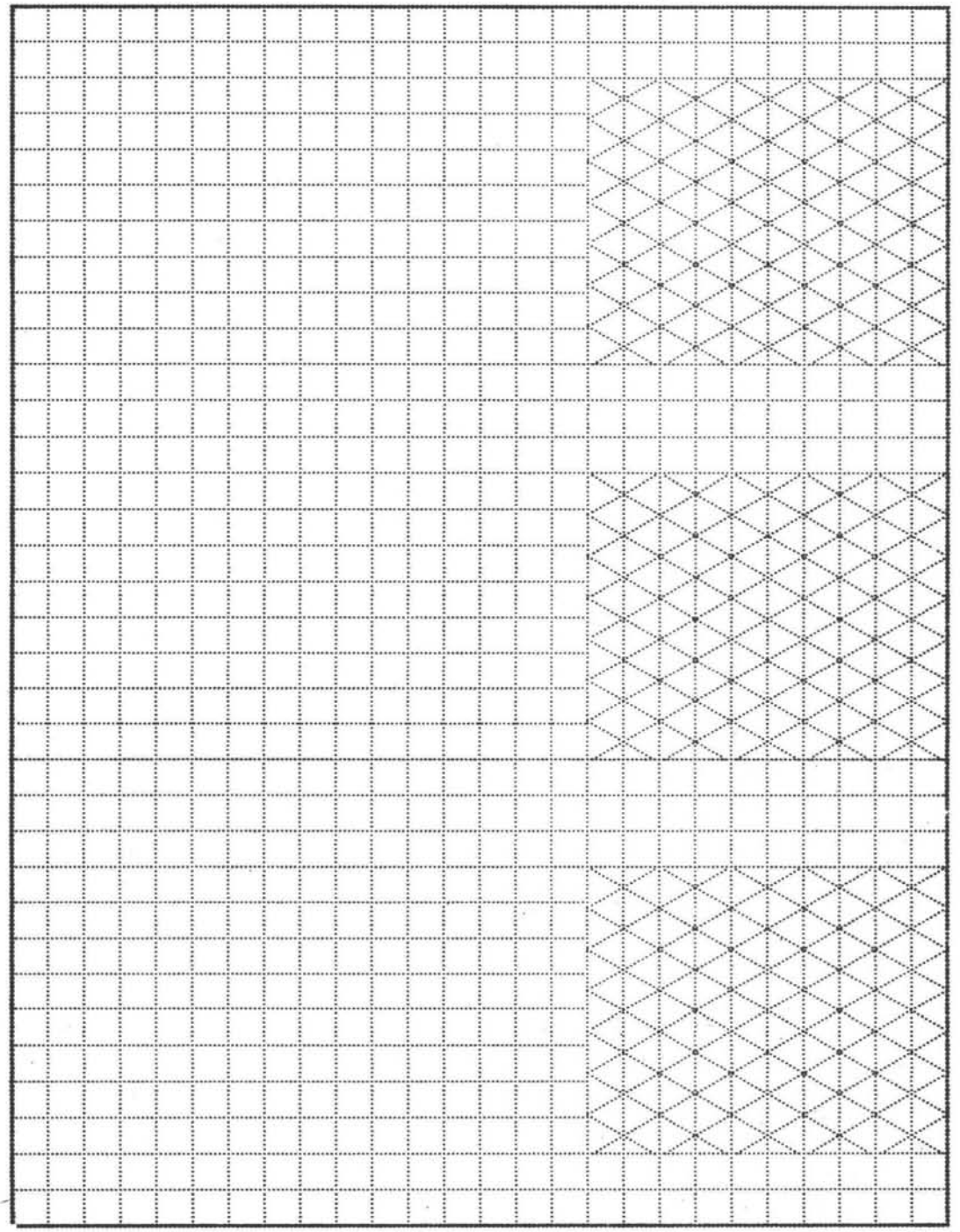

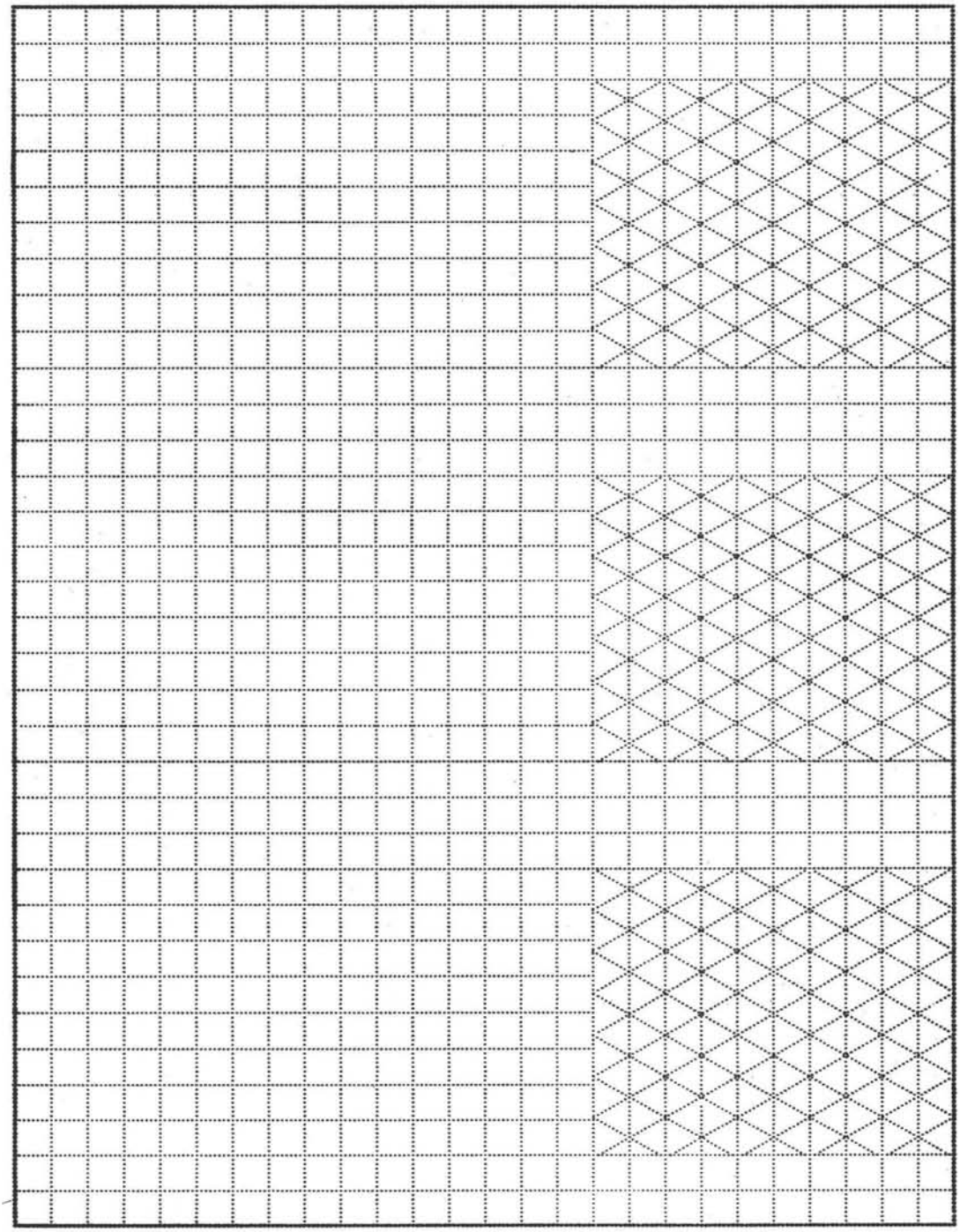

Annexure

Conventional representation of materials

TYPE	CONVENTION	MATERIAL
Metals	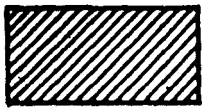	Steel, Cast Iron, Copper and its Alloys, Aluminium and its Alloys, etc.
	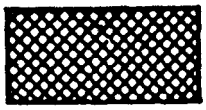	Lead, Zinc, Tin, White-metal, etc.
Glass	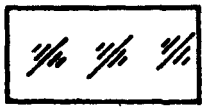	Glass
Packing and Insulating material	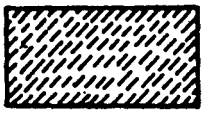	Porcelain, Stoneware, Marble, Slate, etc.
	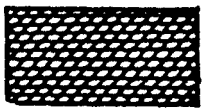	Asbestos, Fibre, Felt, Synthetic resin products, Paper, Cork, Linoleum, Rubeer, Leather, Wax, Insulating and Filling materials, etc.
Liquids	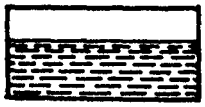	Water, Oil, Petrol, Kerosene, etc.
Wood		Wood, Plywood, etc.
Concrete	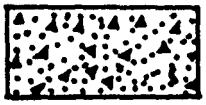	A mixture of Cement, Sand and Gravel

Click Here for More PDF Ebooks

Objective Questions (wherev er necessary explain with sketches)

1. Chapter

1.1 Writing a letter is known as _____ and making a drawing is also known as _____.

1.2. The difference in height between the lead and leg points in compass is _____ mm.

1.3. A mechanical pencil is specified by the _____ of the lead.

1.4. Pencil leads are graded by the _____ or _____ of the lead.

1.5 An enlarged scale is to represent small dimension as big. (True/False)

1.6 Normally used scale is _____

1.7. Templates are used for _____ features.

1.8. As per BIS standard drawing sheets vary from _____ to _____

1.9. French curves help to make a smooth curve joining the points marked. (True/False).

1.10. M2 scale is used to represent _____scale.

1.11. _____ is used in compass to draw large arcs or circles.

1.12. _____ compass is used for small circles.

1.13. _____ Mini draughter is used to make angles. (True/False)

2. Chapter

2.1 The principle involved in arriving at drawing sheet size is given by the relations _____ and _____.

2.2. For A1 size,the surface area is _____. The length is equal to ____ and width is equal to _____.

2.3. The size of the title block is _____.

2.4. The location of the title block is _____.

2.5. The ratio of thick to thin line ticknesses is _____.

2.6. Hidden lines are represented by _____ lines.

2.7. A dimension with importance in the component is known as _____ dimension.

2.8. Axes line cross at small dashes. (True/False)

2.9. The thickness of the line of letters having 10mm height is _____mm.

2.10. Drawing title is written in _____ or _____ mm size.

2.11. Hatching and sub titles are written in _____or _____mm size.

2.12. The inclination of the inclined lettering is _____ degrees.

2.13. Lettering with adjoining stems require _____ spacing. (More/Less)

2.14. Somet letter combinations have over lapping space. (True/False)

2.15. Each feature shall be dimensioned once only on a drawing. (True/False)

2.16. Dimension should be placed on the view where the shape is best seen. (True/False)

2.17. As far as possible dimension should be placed out side the view. (True/False)

2.18. Dimension should be taken from the hidden lines. (True/False)

2.19. A gap should be left between the feature and the starting of the dimension line. (True/False)

2.20. The proportions of the arrow head of the dimension line is _____.

2.21. Dimension should follow the symbol of the shape. (True/False)

2.22. Extension lines should meet with out a gap. (True/False)

2.23. Hidden lines should meet with out a gap (True/False)

2.24. Horizontal dimension line should be to_____ to insert the value of the dimension in both methods. (broken / not broken).

2.25. Dimension may be placed above or below the line. (True/False)

2.26. The terms Elevation and Plan are obsolete in drawing. (True/False)

2.27. Elevation is replaced by front view and plan by top view. (True/False)

2.28. Two methods of demensionning are (a) _____ (b)_____.

3. Chapter

3.1 What is RF?

3.2. Drawings are normally made to _____ scale.

3.3. The scale factor for reducing is _____.

3.4. For drawing of small components _____ scale is used.

3.5. To measure three units _____ scale is used.

3.6. What is a plain scale ?

3.7. What is the application of diagonal scale?

3.8. What are the differences between a vernier and diagonal scale ?

3.9. Name the types of verniers.

3.10. The main scale of a vermier scale is a_____scale.

3.11. The main scale of a vernier is divided into premiary and secondary divisions. (True/False)

3. 12. In a direct vernier,9 main scale divisions are divided into 10 equal parts on the vernier. (True/False)

3. 13. In a retrograde vernier, 19 main scale divsions are divided into 20 equal parts on the vernier(T /F)

3.14. What is a least count ?

4. Chapter

4.1. Name the solids of revolution.

4.2. What is a conic section ?

4.3. Define (a) Ellipse, (b) Parabola, (c) Hyperbola

4.4. When a cone is cut by a plane the intersection curve obtained is known as _____.

4.5. A cone with an apex angle 2θ is cut by a cutting plane at an angle α.

(a) When α is greater than θ , the intersection curves is _____.

(b) " α is equal to θ , " _____.

(c) " less than θ , " _____.

(d) " $\alpha = 90^0$ - " _____.

4.6. When a cone is cut by a section plane that is parallel to the axis and passing through it, their intersection curve is _____.

4.7. In a rectangular hyperbola, the asymptotes intersect each other at _____ angle.

4.8. Ellipse is a curve traced by a point moving such that the sum of its distances from the two fixed points, foci, is constant and equal to the major axis .(True/False)

4.9. The terms transverse and conjugate axes refer to the curve _____.

4.10. Differentiate between epicycloid and hypocycloid.

4.11. What is a generating circle?

4.12. Define directing circle.

4.13. Define an involute.

4.14. The curves generated by a fixed point on the circumference of a rolling circle in known as _____.

4.15. The size of the cycloidal curve is the same irrespective of the size of the generating circle . (True / False).

4.16. The curve generated by a point on the circumference of a rolling circle, rolling along another circle, outside it is called _____.

4.17. The curve traced by a point on a straight line, when it rolls without slipping along a circle or a polygon is called _____.

4.18. The profile of a gear tooth is _____.

5.Chapter

5.1 Name two systems of projection.

5.2. Sketch the symbols of projection.

5.3. In orthographic projections, the _____ are perpendicular to the _____ of projection.

5.4. In _____Projection, any view is so placed that it represents the side of the object away from it.

5.5. Placing the view represented by any side of the object nearer to it is called _____ projection.

5.6. In first angle projection, the object is placed in between the observer and the plane of projection (T/F).

5.7. In third angle projection, the object is placed in between the observer and the plane of projection (T/F)

5.8. A surface of an object appears in its true shape, when it is _____ to the plane of projection (Parallel / Perpendicular).

5.9. The front view of an object is obtained as a projection on the _____ plane, by looking the object, _____ to its front surface.

5.10. The top view of an object is obtained as a projection on the _____ plane, by looking the object normal to its _____ surface.

5.11. In first angle projection (a) the top view is _____ of the front view and (b) the right side view is to the _____of the front view.

5.12. In third angle projection (a) the top view is _____of the front view and (b) the right side view is to the _____ of the front view.

5.13. The side view of an object is obtained as a projection on the plane, by looking the object _____ to its _____ surface.

5.14. In both the methods of projection, the views are identical in shape and detail but only their location with respect to the front view is different. (True/False).

5.15. A straight line is generated as the ____ of a moving point.

5.16. The _____view of a point is obtained as the intersection point between the ray of sight and VP

5.17. The top view of a point is obtained as the intersection point between the ray of sight and _____.

5.18. The projecting lines meet the plane of projection at an angle of 90^0 to it.

(True/False)

5.19. The distance of a point from HP is marked from xy to _____ ((a) top view , (b) front view, (c) side view).

5.20. When a point lies on HP its front view will lie on _____. (xy, below xy, above xy)

5.21. When both the projections of a point lie below xy, the point is situated in _____quadrant.

5.22. When a point lies on VP, its top view lies on xy. (True/False).

5.23. When a point is above HP its front view is _____xy.

5.24. When a point is _____VP its top view is above xy.

5.25. When a point lies on _____ and _____ its two views lie on xy.

5.26. A straight line is defined as the _____distance between two points.

5.27. The projection of a line on a plane parallel to it, appears in its true length.

(True/False).

5.28. When a line is perpendicular to one of the planes, it is _____ to the other plane.

5.29. When a line is perpendicular to HP, its front view is _____ to xy. (parallel / Perpendicular).

5.30. When a line is perpendicular to VP, its _____ is a point. (Front view / Top view)

5.31. When a line is inclined to _____ and parallel to _____ its front view represents the true length of the line.

5.32. When a line is contained by a plane, its projection on that plane is a_____ (Point, equal to its true length)

5.33. When a line is inclined to a plane, its projection on the plane is a line shorter than its true length. (True/False).

5.34. Define trace of a line?

5.35. What is a horizontal trace of a line.

5.36. Define vertical trace of a line.

5.37. The trace of a line is a _____.

5.38. A line parallel to both the HP and the VP has no vertical and horizontal traces. (True/False)

5.39. A line inclined to VP and parallel to HP has _____ trace.

5.40. A line inclined to HP and parallel to VP has _____ trace and no _____trace.

5.41. The HT and VT of a line will always lie on one and same projector. (True/False)

5.42. The HT of a line will always lie below xy line. (True/False).

5.43. The vertical trace of a line situated in the first quadrant will always lie above xy line. (True/False)

5.44. A line is perpendicular to the HP. Its _____ trace coincides with its _____view.

5.45. A line is perperdicular to the VP.Its _____trace coincides with its _____view.

5.46. A line perpendicular to HP has no _____ trace and a line perpendicular to VP has no _____ trace.

5.47. A line perpendicular to VP has no HT because the line is _____ to the HP. (Parallel / Perpendicular).

5.48. A line perpendiculor to HP has no VT because the line is _____ to the VP (Parallel/perpendicular)

5.49. A line contained by a pofile plane will always have both HT and VT. (True/False)

5.50. A line is said to be _____if it is inclined to both HP and VP.

5.51. When a plane is perpendicular to a reference plane, its projection on the plane is a _____.

5.52. One of the projections of an oblique plane is a straight line. (T/F).

5.53. When two planes intersect each other, their intersection is a straight line .(T/F).

5.54. The top view of a circular plane, inclined to VP and perpondicular to HP is a line.

5.55. The true shape of the front view of a cicular plane, which is parallel to HP and perpendicular to VP is _____.

6. Chapter

6.1 What is a solid ?

6.2. What is a polyhedron?

6.3 What is a regular polyhedron?

6.4. What is a tetrahedron?

6.5. How many faces does a octahedron and dodecahedron have?

6.6. Define a prism.

6.7. What is a right regular prism?

6.8. Define a pyramid.

6.9. A prism is named according to the shape of its ends (T/F)

6.10. A prism is a regular polyhedron. (T/F).

6.11. All polyhedra are bounded by only equal equilateral triangles. (T/F)

6.12. Define the axis of a pyramid.

6.13. Pyramids are named depending on the shape of their base. (T/F).

6.14. Three examples of solids of revolution are _____ _____ _____

6.15. Define frustrum.

6.16. What is truncated solid?

6.17. When the axis of an object is perpendicular to the VP, it is _____ to the H.P.

6.18. The front view of the corners resting on the HP are on the _____line.

6.19. The shape of a top view of a cone with its base on the VP is a _____.

6.20. A cylinder of diameter D and a hight H rests on its base on the Hp. Its front view is a _____of width _____ and height _____.

ANSWERS

1.Chapter

1.1 drafting / draughting. 1.2. 1mm, 1.3. daiameter,
1.4. Hardness, Softness 1.5. True, 1.6. Full scale
1.7. Standard (circles,etc.,) 1.8. A0 to A4 1.9. True.
1.10. 1:5 1.11. Lengthening bar 1.12. Bow
1.13. True.

2. Chapter

2.1 X:Y = 1:$\sqrt{2}$, XY =1 2.2. 594 x 841, 841, 594 2.3. 170 x 65
2.4 at RH corner 2.5. 2:1 2.6. Thin dotted lines
2.7. Functional 2.8. F 2.9. 1mm
2.10. 7 or 10 mm 2.11. 3.5 or 10mm 2.12. 15^0
2.13. more 2.14. True 2.15. True
2.16. True 2.17. True. 2.18. False
2.19. False 2.20. 3:1 2.21. True
2.22. True 2.23. True 2.24. not broken
2.25 False 2.26. True 2.27. True
2.28. (a) Aligned and (b) unidrectional.

3. Chapter

3.1 Representative Factor also known as Scale Factor.
3.2. False 3.3. Greater than 1:1 3.4.Enlarging
3.5. Diagonal 3.11. True 3.12. True
3.13. False.

4 Chapter

4.4. Conic 4.5. (a) Ellipse, (b) Parabola, (c) Hyperbola, (d) Cicle.
4.6. Isosceles triangle, 4.7. 90^0 4.8. True, 4.9. Hyperbola
4.14. Cycloids. 4.15. False. 4.16 Epi-Cycloid.
4.17. Involute. 4.18. Involute.

5. Chapter

5.1. First and Third angle 5.3 Projectors, plane. 5.4 First angle
5.5 Third angle 5.6 True 5.7. False.
5.8. Parallel 5.9. Vertical, Normal 5.10. Horizontal, top.
5.11, (a)Below (b) Left 5.12. (a) above, (b) right 5.13. Profitle plane, normal, side

5.14. True.
5.15. Locus
5.16. Front
5.17. HP
5.18. True
5.19. (b) Front view
5.20 (a) XY
5.21. Fourth
5.22. True.
5.23. Above
5.24. Behind
5.25. On HP and VP.
5.26. Shortest
5.27. True
5.28. Parallel
5.29. Perpendiculur
5.30. Front
5.31. HP, VP
5.32, Equal to its true length.
5.33. True.
5.37. Point,
5.38. True,
5.39. Vertical, Horizontal.
5.40. Horizontal, Verticle.
5.41. False,
5.42. False,
5.43. False.
5.44. Horizontal, Top,
5.45. Vertical, Front,
5.46. Vertical, Horizontal.
5.47. Parallel
5.48. Parallel
5.49. False.
5.50. Oblique. 5.51. Line
5.52. False
5.53. True
5.54 Inclined to XY.
5.55. Staright line.

6. Chapter

6.9. True,
6.10 False,
6.11. False,
6.13 True.
6.14. Cylinder, Cone, Sphere,
6.17. Parallel,
6.18 xy or Reference line.
6.19. Triangle,
6.20 Rectangle, D, H.

Model Question Papers

Paper - I

1. Construct a Diagonal scale of R.F = 1 : 32,00,000 to show kilometers and long enough to measure up to 400 Km. Show distances of 257 Km and 333 Km on the scale.
2. Trace the paths of the ends of the straight line AP, 120 mm long, when it rolls, with out slipping, on a semi-circle in the starting position.
3. The top view of a line PQ makes an angle of 30° with the horizontal and has a length of 100 mm. The end Q is in the H.P and P is in the VP and 65 mm above HP. Draw the projections of the line and find its true length and true inclinations with the reference planes. Also show its traces.
4. A sphere of 60 mm diameter rests on HP. It is cut by a section plane perpendicular to HP and inclined at 45° to VP and at a distance of 10 mm from its centre. Draw the sectional view and true shape of the section.
5. A vertical hexagonal prism of 25 mm side of base and axis 60 mm has one of its rectangular faces parallel to VP. A circular hole of 40 mm diameter is drilled through the prism such that the axis of the hole bisects the axis of the prism at right angle and is perpendicular to VP. Draw the development of the lateral surface of the prism showing the true shape of the hole in it.
6. Draw the isometric projection of a Frustum of hexagonal pyramid, side of base 30 mm the side of top face 15 mm of height 50 mm.
7. Draw the isometric view for the given orthogonal views as shown in the Figure.

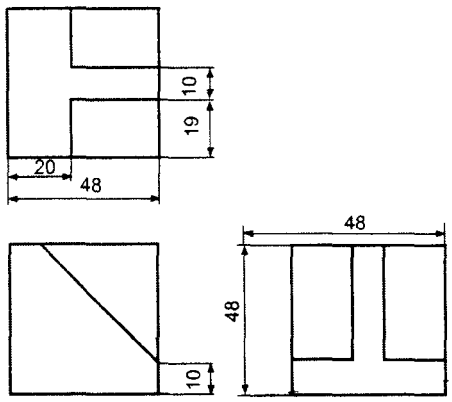

8. A right regular square pyramid, base edge 30 mm and height 32 mm is resting on ground plane on its base. Its base edge, nearer to the picture plane, parallel to and 25 mm is behind the picture plane. The station point is 38 mm in front of the picture plane and 25 mm above the ground plane. The central plane containing station point, is 30 mm to left of vertex?. Draw perpective view of pyramid.

Paper - 2

1. Construct a diagonal scale of R.F = 1 : 2000 to show meters, decimeters and centimeters and long enough to measure 300 m. Mark a distance of 257.75 meters.
2. ABC is an equilateral triangle of side equal 60 mm. Trace the loci of the vertices A, B and C, when the circle circumscribing ABC rolls without slipping along a fixed straight line for one revolution.
3. A hexagonal lamina of 20 mm side rests on one of its corners on HP. The diagonal passing through this corner is inclined at 45° to HP. The lamina is then rotated through 90° such that the top view of this diagonal is perpendicular to VP and the surface is still inclined at 45° to HP. Draw the projections of the lamina.
4. A cylinder base 40 mm diameter and axis 58 mm long rests with a point of its base circle on HP. Its axis is inclined at 45° to HP and parallel to VP. A section plane perpendicular to both the HP and VP bisects the axis of the cylinder. Draw its front, top and sectional side views.
5. A vertical cylinder of 50 mm diameter is penetrated by a horizontal cylinder of same size with their axes intersecting. Draw the curves of intersections if the axis of the horizontal cylinder is inclined at 45° to VP.
6. Draw the isometric view of a cone 40 mm diameter and axis 55 mm long when its axis is horizontal. Draw to isometric scale.
7. For the given orthographic projections, draw the isometric view.

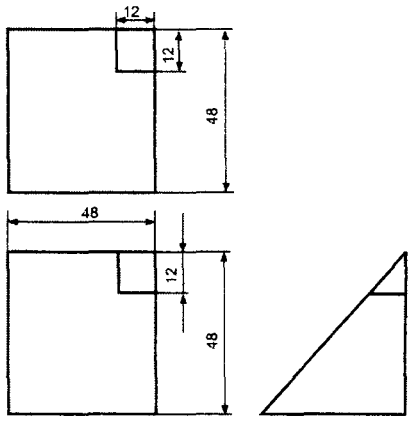

8. A point A is situated 20 mm behind the picture plane and 12 mm above the ground plane. The station point is 32 mm in front of the picture plane, 26 mm above the ground plane. It lies in a central plane 14 mm to the right of the point. Draw the perpective view of the point.

Paper - 3

1. Construct a Diagonal scale of 1 : 5000 to show single metre and long enough to measure 300 meters. Mark on the scale a distance of 285.5 meters.
2. A circle of 60 mm diameter rolls on a horizontal line for half a revolution clock-wise and then on a line inclined at 60 degrees to the horizontal for another half, clock-wise. Draw the curve traced by a point P on the circumference the circle, taking the top most point on the rolling circle as generating point in the initial position.
3. A thin rectangular plate of sides 40 mm × 20 mm has its shorter side in the HP and inclined at an angle of 30° to VP. Project its front view when its top view is a perfect square of 20 mm side.
4. A cone of base 55 mm diameter and axis 65 mm long, rests with its base on HP. A section plane perpendicular to both HP and VP cuts the cone at a distance of 8 mm from its axis. Draw its top view, front view and sectional side view.
5. A cylinder of diameter of base 60 mm altitude 80 mm stands on its base. It is cut into two halves by a plane perpendicular to the VP and inclined at 30° to HP. Draw the development of the lower half.
6. A rectangular prism 30 × 20 × 60 mm lies on HP on one of its largest faces with its axis parallel to both HP and VP. Draw its isometric projection.
7. The orthogonal views of the picture as shown in the figure. Covert them into isometric view.

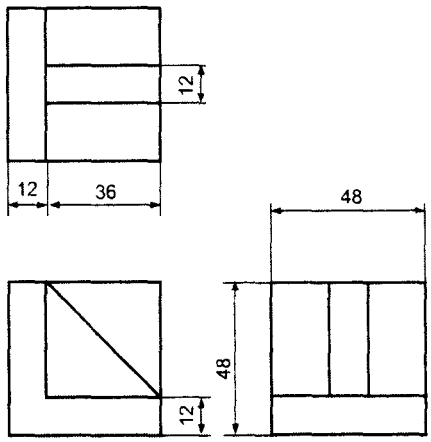

8. A hexagonal lamina of 25 mm side stands vertically on the ground plane and inclined at 50° to PP. The corner nearest to PP is 20 mm behind it. The station point is 45 mm in front of PP, 50 mm above the ground plane and lies in a central plane, which passes through the center of the lamina. Draw the perspective view.

Paper - 4

1. Draw a vernier of R.F = 1 : 2.4 to show diameters, centimeters and millimeters and long enough to read up to 6 decimeters. Mark a distance of 3.69 decimeters on the scale.
2. The foci of an ellipse are 100 mm apart and the minor axis is 70 mm long. Determine the length of the minor axis and draw half the ellipse by concentric circles method and the other half by Oblong method. Draw a curve parallel to the ellipse and 25 mm away from it.
3. The distance between the projector containing the HT and VT of a straight line AB is 120 mm and the distance between the projections drawn from the end of a straight line is 40 mm. The HT is located 40 mm in front of VP and the line lies 15 mm above HP. Draw the projection and its true length and true inclinations.
4. A cone of base diameter 40 mm and axis height 60 mm rests on the ground on a point of its base circle such that the axis of the cone is inclined at 40° to the HP and 30° to the VP. Draw its front and top views.
5. A hexagonal prism of side of base 30 mm and height 60 mm is resting on HP with one of its base edges parallel to VP. Right half of the solid is cut by an upward plane inclined at 60° to the ground and starting from the axis and 30 mm below the top end. The left half of the solid is cut by a plane inclined at 30° to the HP downwards from the axis. The two section planes are continues. Draw the development of the lower portion.
6. Draw the isometric projection of a square prism side of base 60 mm height 50 mm surmounted by a square pyramid whose base coincides with the top of the prism and whose height is 60 mm.
7. Convert the orthogonal projections shown in figure into an isometric view of the actual picture.

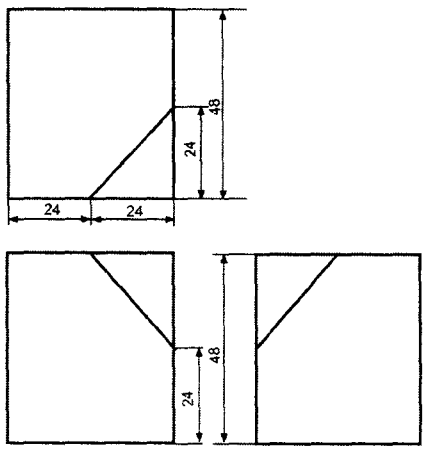

8. Draw the perspective view of a horizontal circular lamina of 50 mm diameter resting on the ground. The center of the plane is 35 mm behind PP, the station point is in the central plane, passing through the center of the circular plane and 80 mm in front of the PP and 60 mm above the ground.

Paper - 5

1. The area of field is 50,000 sq.m. The length and breadth of the field, on the map are 10 cm and 8 cm respectively. Construct a diagonal scale, which can read up to one metre. Mark the length of 236 meters on the scale. Find the R.F of the scale.
2. Draw an involute of a circle of 50 mm diameter. Also, draw a normal and tangent at any point on the curve.
3. (a) A line AB 100 mm long has its front view inclined at an angle of 45° to XY. The point A is in VP and 25 mm above HP. The length of the front view is 60 mm.

   Draw the top view of the line and measure its length. Also find the inclinations of the line AB to HP and VP.

   (b) A point P is 15 mm above the HP and 20 mm in front of the VP. Another point Q is 25 mm behind the VP and 40 mm below the HP. Darw projections of P and Q keeping the distance between their projectors 60 mm apart distance between their top view and their front views.
4. A hexagonal prism of base of side 40 mm and axis length 80 mm rests on one of its base edges on the HP. The end containing that edge is inclined at 30° to the HP and the axis is parallel to VP. It is cut by a plane perpendicular to the VP and parallel to the HP. The cutting plane bisects the axis. Draw its front and the sectional top views.
5. A vertical cylinder of 50 mm diameter and 75 mm long is penetrated by a horizontal cylinder of 40 mm diameter and 75 mm long such that their axes bisect each other at right angles. Draw the intersection curve.
6. A sphere of diameter 40 mm rests centrally on the top of a square frustum, base 60 mm top 40 mm and height 75 mm. Draw the isometric view of the combination of solids.
7. For the given orthographic projections, draw the isometric view.

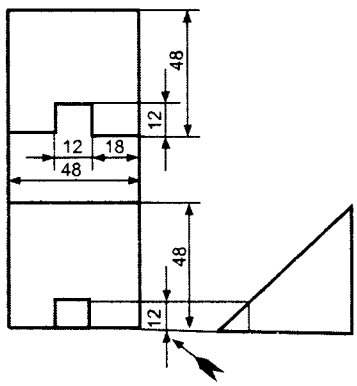

8. A step block is on 15 mm high, 15 mm width and 15 mm long. The total length of the block is 30 mm. The largest side makes an angle of 45° to PP. The observer is at a distance of 60 mm in front of the edge and 10 mm to the left. The height of the observer is 50 mm. Draw the perspective projection of the object.

Paper - 6

1. The distance between parry's corner and Egmore is 2.5 Km. On inspection of road map, its equivalent distance measures 5 cm. Draw a diagonal scale to read 50 meters minimum. Show on it a distance of 6350 metres.
2. Draw an inferior epitrochoid of base circle 150 mm diameter and rolling circle 50 mm diameter. The tracing point P is 20 mm from the center of the rolling circle.
3. (a) A square lamina of side 35 mm is parallel to HP with one of its sides is inclined at 30° to VP. The lamina is 20 mm above HP. Draw its top and front views and show its traces.
   (b) Determine the locations of the following points with respect to HP and VP.
      (i) Point A whose front view is 70 mm above XY and top view 50 mm below XY
      (ii) Point B whose front view is 40 mm below XY and top view 55 mm above XY
      (iii) Point C whose front view is 45 mm above XY and top view 60 mm above XY.
4. A pentagonal pyramid of base side 40 mm abd axis length 80 mm is lying on the HP on one of its triangular faces with its axis parallel to the VP. It is cut by a plane inclined at 30° to the HP and perpendicular to the VP. The cuttting plane meets the axis at 15 mm from the base. Draw the front view, sectional top view and the true shape of the section.
5. A cone of base diameter 70 mm and height 100 mm rests on the HP and is penetrated by a horizontal cylinder of diameter 45 mm, the axis of cylinder is 9 mm away from the axis of the cone and at a distance 30 mm above the base of the cone. Draw projection of the solids showing the curves of inter section between the solids.
6. A cylinder of base diameter 30 mm axis is 60 mm is resting centrally on a slab of 60 mm square and thickness 20 mm. Draw the isometric projection of the combination of the solids.
7. Draw the isometric view for the given orthogonal views as shown in the figure.

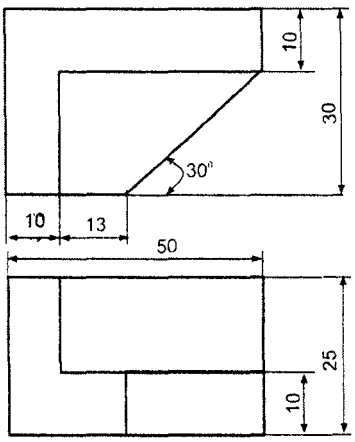

8. Draw the perspective view of a point P situated 10 mm behind the PP and 15 mm above the ground plane. The station point is 25 mm in front of the PP, 20 mm above the ground plane.It lies in a central plane 12 mm to the right of the point.

Paper - 7

1. A rectangular plot of land area 0.45 hectare is reperesented on a map by a similar rectangle of 5 sq.cm. Calculate the R.F. of the scale of the map. Also draw a diagonal scale to read up to maximum of single Km from the map. The scale should be long enough to measure up to 500 meters. Show on it 459 m.
2. Draw an ellipse, given the minor and major diameters as 100 mm and 150 mm respectively. Draw the tangent and normal at any point on the curve.
3. (a) A rectangular plate of sides 70 × 40 mm, has one of its shorter edges in VP inclined at 40° to HP. Draw its top view if its front view is a square of side 40 mm.

   (b) Determine the locations of the following with respect to HP and VP.

   (i) Point P whose front view is 50 mm above XY and top view 50 mm below XY

   (ii) Point Q whose front view is 60 mm below XY and top view 55 mm aboveXY

   (i) Point R whose front view is 60 mm above XY and top view 60 mm above XY
4. A square pyramid of base side 30 mm and altitude 50 mm lies on one of its triangular faces on the HP with its axis parallel to the VP. It is cut by a vertical plane inclined at 30° to the VP and meeting the axis at 40 mm from the vertex measured in the plan. Draw the top view, sectional front view and the true shape of the section.
5. A hexagonal pyramid, side of base 30 mm, axis 70 mm is resting on HP on its base. It is cut by a section plane perpendicular to V.P and at 45° to H.P and passing through the mid point of the axis of the pyramid. Draw the development of the lateral surface of the truncated pyramid.
6. A hemisphere of 40 mm diameter is nailed on the top surface of a frustum of a square pyramid. The sides of the top and bottom faces of the frustum are 20 mm and 40 mm respectively and its height is 50 mm. The axes of both the solids coincide. Draw the isometric projection.
7. Consider the picture shown in figure and draw the front view, top view and side view in first angle projection.

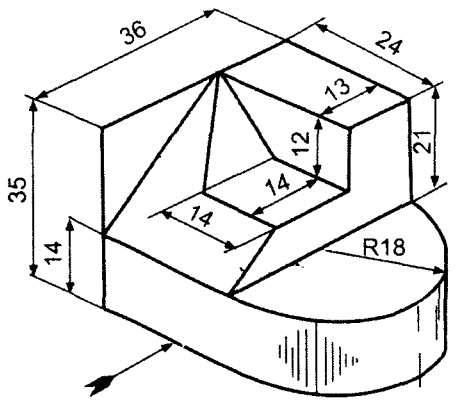

8. Draw the perspective projection of a hallow cylinder of 60 mm external diameter and 80 mm long, with a wall thickness of 10 mm. It is resting on a generator on the ground, with its axis inclined at 60° to and touching the PP.

Paper - 8

1. Construct a vernier scale to read distances correct to a decameter on a map in which the actual distance are reduced in the ratio of 1 : 40000. The scale should be long enough to measure 6 kilometers. Mark on the scale the lengths of 3.34 km and 0.57 km.

2. Construct a hypocycloid, rolling circle 60 mm diameter and directing circle 180 mm diameter. Draw a tangent to it at a point 60 mm from the center of the directing circle.

3. (a) The top view of a circular lamina of diameter 60 mm resting on HP is an ellipse of major axis 60 mm and minor axis 40 mm. Draw its front view when the Major axis of the ellipse in the top view is horizontal. Find the angle of inclination of the lamina with HP.

   (b) An equilateral triangle of side 60 mm has its horizontal trace parallel to XY, 15 mm away from it. Draw its projections when one of its sides is inclined at 30^0 to HP.

4. A hexagonal pyramid side of base 25 mm and axis 55 mm long, rests with its base on the HP such that one of the edges of its base is perpendicular to VP. It is cut by a section plane perpendicular to HP inclined at 45° to VP. and passing through the pyramid at a distance of 10 mm from the axis. Draw the sectional front view and the true shape of the section.

5. A cone of base diameter 50 mm and axis length 70 mm rests with its base on HP. A section plane is perpendicular to V.P and inclined at 35^0 to HP bisects the axis of the cone. Draw the development of the truncated cone.

6. A pentagonal pyramid, base 30 mm and axis 65 mm long rests with its base on HP. An edge of the base is parallel to VP and nearer to it. A horizontal section plane cuts the pyramid and passes through a point on the axis at a distance of 25 mm from the apex. Draw the isometric view of the frustum of the pyramid.

7. Convert the isometric view of the picture shown in the figure into orthogonal projection of all three views.

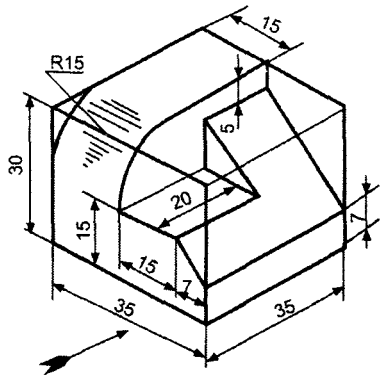

8. A circular cylinder slab, with diameter of base 120 mm and thickness 50 mm, rests with its base on the ground. The axis of the slab is 80 mm behind PP and 80 mm to the left of the eye. The eye is 160 mm from PP and 120 mm above the ground. Draw the perspective view.

Paper - 9

1. The distance between Vadodara and Surat is 130 Km. A train covers this distance in 2.5 hours. Construct a plain scale to measure time up to a single minute. The R.F of the scale is 1 : 2,60,000. Sow the distance covered by the train in 15 seconds.
2. The major axis of an ellipse is 160 mm long and the minor axis 90 mm long. Find the faci and draw the ellipse by 'Arcs of circles method'. Draw a tangent to the ellipse at a point on it 25 mm above the major axis.
3. The front view of a line AB measures 65 mm and makes an angle of 15 degrees with xy. A is in the H.P. and the V.T. of the line is 15 mm below the H.P. The line is inclined at 30 degrees to the V.P. Draw the projections of AB and find its true length and inclination with the H.P. Also locate its H.T.
4. A cone, diameter of base 50 mm and axis 65 mm long. is lying on the H.P. on one of its generators with the axis parallel to the V.P. It is cut by a horizontal section plane 12 mm above the ground. Draw its front view and sectional top view .
5. A vertical cylinder of 50 mm diameter and 75 mm long is penetrated by a horizontal cylinder of 40 mm diameter and 75 mm long such that their axes bisect each other at right angles. Draw the intersection curve.
6. A sphere of diameter 40 mm rests centrally on the top of a square frustum, base 60 mm, top 40 mm and height 75 mm. Draw the isometric view of the combination of solids.
7. Convert the isometric view of the picture shown in the figure below in to orthogonal projection of all three views.

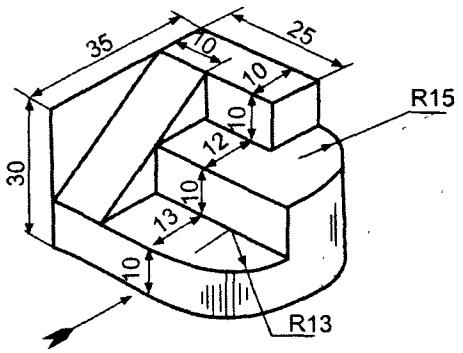

8. A circular lamina of 45 mm diameter lies on the ground plane and touches the picture plane. The center plane passes through the center of the circle. The station point is 70 mm in front of picture plane and 60 mm above the ground plane. Draw the perspective view.

Paper - 10

1. Draw a vernier of R.F = 1 : 2.4 to show decimeters. centimeters and millimeters and long enough to read up to 6 decimeters. Mark a distance of 3.69 decimeters on the scale.
2. A circle of 60 mm diameter rolls on a horizontal line for half a revolution clock-wise and then on a line inclined at 60 degrees to the horizontal for another half clock-wise. Draw the curve traced by a point P on the circumference the circle, taking the top most point on the rolling circle as generating point in the initial position.
3. Two lines AB and AC make an angle 120 degrees between them in their front view and top view. AB is parallel to both the H.P. and V.P. Determine the real angle between AB and AC.
4. A cube of 65 mm long edges has its vertical faces equally inclined to the V.P. It is cut by a section plane, perpendicular to the V.P., so that the true shape of the section is a regular hexagon. Determine the inclination of the cutting plane with the H.P. and draw the sectional top view and true shape of the section.
5. A cylinder of diameter of base 60 mm altitude 80 mm stands on its base. It is cut into two halves by a plane perpendicular to the VP and inclined at 30° to HP. Draw the development of the lower half.
6. Draw the isometric projection of a square prism side of base 60 mm height 50 mm surmounted by a square pyramid whose base coincides with the top of the prism and whose height is 60 mm.
7. Convert the isometric view of the picture shown in the figure below in to orthogonal projection of all three views.

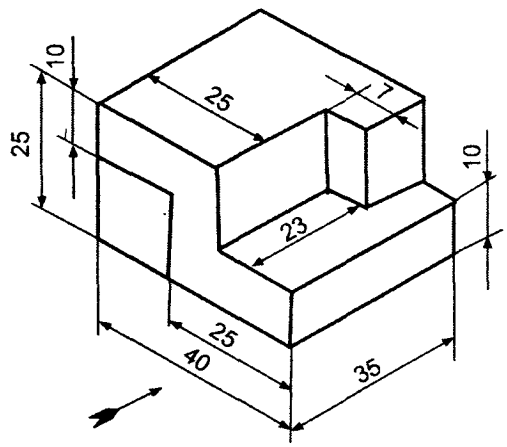

8. A cube of edge 30 mm rests with one of its faces on the ground plane such that a vertical edge touches the picture plane. The vertical faces of the cube are equally inclined to PP and behind it. A station point is 40 mm in front of the PP. 50 mm above the ground plane and lies in a central plane 15 mm to the right of the axis of the cube. Draw the perspective view.

Paper - 11

1. Draw a vernier of R.F = 1 : 2.4 to show decimeters, centimeters and millimeters and long enough to read up to 6 decimeters. Mark a distance of 3.69 decimeters on the scale.
2. A circle of 60 mm diameter rolls on a horizontal line for half a revolution clock wise and then on a line inclined at 60 degrees to the horizontal for another half clock-wise. Draw the curve traced by a point P on the circumference the circle taking the top most point on the rolling circle as generating point in the initial position.
3. A hexagonal plane of 30 mm side has a corner in the V.P. and the surface of the plane makes an angle 40 degrees with the V.P. Draw its projections when the front view of the diagonal through the corner which is in V.P. makes an angle of 50 degrees to H.P.
4. A hexagonal prism, side of the base 30 mm long and the axis 60 mm long has one of its sides on the H.P. and the axis is inclined at 45 degrees to the H.P. Draw its projections. Project another front view on an auxiliary vertical plane which is inclined at 40 degrees to the V.P.
5. A vertical cone of 40 mm diameter of base and height 50 mm is cut by a cutting plane perpendicular to V.P and inclined at 30^0 to the H.P so as to bisect the axis of the cone. Draw the developement of the lateral surface of the truncated portion of the cone.
6. A hemisphere of 40 mm diameter is nailed on the top surface of a frustum of a square pyramid. The sides of the top and bottom faces of the frusturm are 20 mm and 40 mm respectively and its height is 50 mm. The axes of both the solid coincide. Draw the isometric projection.
7. Consider the picture shown in figure below and draw the front view, top view and side view in first angle projection.

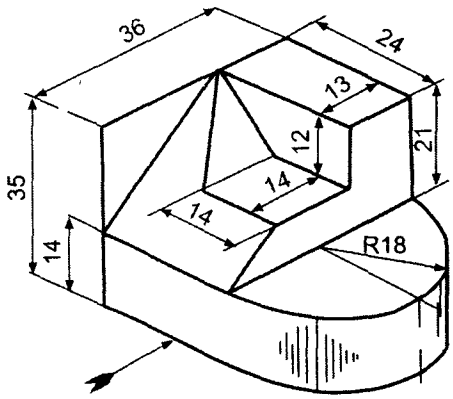

8. Draw the perspective view of a point P is situated 10 mm behind the PP and 15 mm above the ground plane. The station point is 25 mm in front of the PP. 20 mm above the ground plane. It lies in a central plane 12 mm to the right of the point.

Paper - 12

1. The distance between Vadodara and Surat is 130 km. A train covers the distance in 2.5 hours. Construct a plain scale to measure time up to asingle minute. The R.F. of the scale is 1 : 2,60,000. Show the distance covered by the train in 15 seconds.
2. A circle of 60 mm diameter rolls on a horzontal line for half a revolution clockwise and then on a line inclined at 60 degrees to the horizontal for another half clock-wise. Draw the curve traced by a point P on the circumference the circle taking the top most point on the rolling circle as generating point in the initial position.
3. Draw the projections of a circle of 60 mm diameter having end A of the diameter AB in the H.P. the end B in the V.P., and the surface inclined at 30 degrees to the H.P. and 60 degrees to the V.P.
4. A cone of base 55 mm diameter and axis 65 mm long, rests with its base on HP. A section plane perpendicular to both HP and VP cuts the cone at a distance of 8 mm from its axis. Draw its top view, front view and sectional side view.
5. A hexagonal prism of side of base 30 mm and height 60 mm is resting on HP with one of its base edges parallel to VP. Right half of the solid is cut by an upward plane inclined at 60° to the ground and starting from the axis and 30 mm below the top end. The left half of the solid is cut by a plane inclined at 30° to the HP downwards from the axis. The two section planes are continues. Draw the development of the lower portion.
6. Draw the isometric projection of a Frustum of hexagonal pyramid, side of base 30 mm, the side of top face 15 mm and of height 50 mm.
7. Draw the elevation, plan and side view of the picture shown in the figure below.

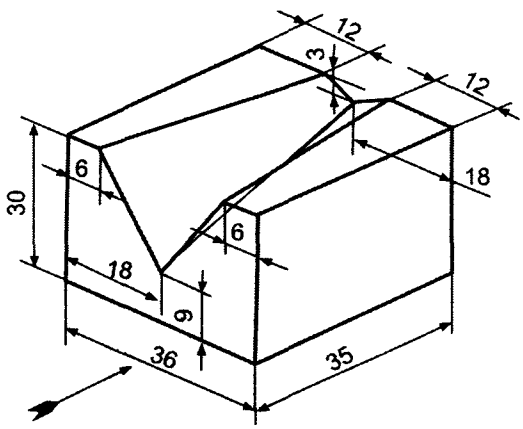

8. Draw the perspective view of a point P i situated 10 mm behind the PP and 15 mm above the ground plane. The station point is 25 mm in front of the PP, 20 mm above the ground plane. It lies in a central plane 12 mm to the right of the point.