ELECTRICAL SPECIFICATIONS

PART 1 - GENERAL

1.01 COORDINATION OF TRADES: SCHEDULE AND COORDINATE WORK WITH THAT OF OTHER DIVISIONS AND SECTIONS.
1.02 GUARANTEE IN WRITING THE ELECTRICAL INSTALLATION, AND ALL WORK UNDER THIS SECTION, FOR A PERIOD OF ONE YEAR FROM THE DATE OF FINAL ACCEPTANCE BY THE OWNER AGAINST ALL EVIDENCE OF IMPERFECT WORKMANSHIP OR FAILURE OR MALFUNCTION OF MATERIALS.

PART 2 - PRODUCTS

2.01 MATERIALS AND EQUIPMENT
A. MATERIAL FURNISHED UNDER THIS CONTRACT, UNLESS OTHERWISE NOTED, SHALL BE NEW, FREE FROM DEFECTS AND SHALL CONFORM WITH THE STANDARDS OF UL.
B. VOLTAGE, AMPERE, AND OTHER RATINGS OF EQUIPMENT SHALL BE SUITABLE FOR USE INTENDED. DISCONNECT SWITCHES SHALL BE PROPERLY HORSEPOWER RATED AND SUITABLE FOR VOLTAGE AND AMPERE RATING OF LOAD.
C. THE DRAWINGS GENERALLY INDICATES THE RACEWAY SIZE, THE NUMBER, SIZE, AND INSULATION TYPE OF CONDUCTORS TO BE PROVIDED AND INSTALLED. WHERE THESE ITEMS DO NOT MEET MINIMUM APPLICABLE CODES, FOR EQUIPMENT BEING SERVED, COMPLY AS REQUIRED AT NO ADDITIONAL COST.
2.02 RACEWAYS
A. GALVANIZED RIGID CONDUIT (GRC); INCLUDING ELBOWS AND COUPLINGS.
B. INTERMEDIATE METAL CONDUIT (IMC); INCLUDING ELBOWS AND COUPLINGS.
C. ELECTRIC METALLIC TUBING (EMT) WITH FITTINGS OF PRESSED STEEL OR MALLEABLE IRON, COMPRESSION TYPE (IN WET AREAS ONLY) WITH INSULATED THROATS.
D. RIGID NON-METALLIC CONDUIT: (PVC) U.L. LABELED SCHEDULE 40 P.V.C.
2.03 DEVICE AND JUNCTION BOXES: INCLUDE PLASTER RINGS, COVERS, AND KO SEALS AS REQUIRED.
2.04 WIRE AND CABLE: UNLESS OTHERWISE NOTED, WIRE AND CABLE SHALL BE SOFT DRAWN, ANNEALED COPPER. WIRE SIZES NO. 8 AND LARGER AND CONDUCTORS SERVING MOTORS AND SUBJECT TO VIBRATIONS SHALL BE STRANDED CABLE. INSULATION TO BE THWN/THHN, JACKETED 90C INSULATED WIRE. PROVIDE WIRE COLOR IDENTIFICATION: NEUTRAL WIRE - WHITE, LIVE WIRE - BLACK, RED, BLUE ON 120/208 VOLT SYSTEM; NEUTRAL WIRE - GREY, LIVE WIRE - BROWN, ORANGE YELLOW ON 277/480 VOLT SYSTEM; GROUND - GREEN.
2.05 ADDED PANELS TO BE PANELBOARDS - LOAD CENTERS ARE NOT ACCEPTABLE UNLESS SPECIFICALLY APPROVED.
2.06 SERVICE ENTRANCE AND DISTRIBUTION GEAR BY G.E., SQUARE "D" OR CUTLER HAMMER OR SIEMENS ONLY. INTERIOR PANELBOARDS SHALL BE RECESSED WITH FLANGED/REMOVABLE SCREW-ON COVER. SURFACE MOUNTED PANELBOARDS OR HINGED/FLUSH COVERS ARE NOT ALLOWED.
2.07 SWITCHBOARDS: COPPER BUSSING WITH FULL CAPACITY NEUTRAL.
2.11 120/208 VOLT AND 277/480 VOLT PANELBOARDS: 3 PHASE, 4 WIRE, COPPER BUS, COMPOSED OF AN ASSEMBLY OF BOLT-IN-PLACE MOLDED CASE CIRCUIT BREAKERS WITH THERMAL AND MAGNETIC TRIP AND TRIP FREE POSITION SEPARATE FROM EITHER ON OR OFF POSITIONS.
2.13 SAFETY SWITCHES: FUSED, HEAVY DUTY, HORSEPOWER RATED.
2.14 STARTERS, CONTACTORS AND CONTROL DEVICES: PROVIDE AS SHOWN AND AS REQUIRED BY CODE. FURNISH COMPLETE WITH PILOT LIGHTS, AUXILIARY CONTACTS, PUSH BUTTONS, HAND-OFF-ON SWITCHES, CONTROL DEVICES, AND OVERLOAD RELAYS. THERMAL OVERLOADS TO BE SIZED PER MANUFACTURERS RECOMMENDATIONS. AMBIENTLY COMPENSATE ALL HEATERS EXPOSED TO HIGH TEMPERATURE OR INSTALLED OUTSIDE AS NEEDED.
2.16 NAMEPLATES: PROVIDE BLACK LAMICOID NAMEPLATES WITH 3/16" HIGH WHITE ENGRAVED LETTERS ON PANELS, SWITCHBOARDS, MAINS AND SUBMAINS, DISTRIBUTION EQUIPMENT, REMOTE SAFETY SWITCHES, CIRCUIT BREAKERS, TIME SWITCHES, CONTACTORS, AND STARTERS.
2.17 WIRING DEVICES
A. HUBBELL OR COMPARABLE LEVITON OR BRYANT: WHITE AND GREY IN COLOR - AS NOTED ON DRAWINGS OR PER ARCHITECT. 15 AMP DEVICES ALLOWED ONLY WHEN SPECIFICALLY DENOTED ON ELECTRICAL CONSTRUCTION DRAWINGS.
B. TOGGLE SWITCHES: SINGLE POLE - HUBBELL 1221- 20A, 120/277V, THREE WAY - HUBBELL 1223- 20A, 120/277V, FOUR WAY - HUBBELL 1224- 20A, 120/277V.
C. RECEPTACLES: DUPLEX GROUNDING TYPE, SPECIFICATION GRADE, 125 VOLT, 20 AMPERES, SINGLE PHASE, HUBBELL NO. 5262 OR COMPARABLE.
D. GROUND FAULT INTERRUPTER TYPE RECEPTACLE: DUPLEX GROUNDING TYPE, SPECIFICATION GRADE, 125 VOLT, 20 AMPERES, SINGLE PHASE, 5 mA GROUND TRIP, FEED THROUGH CONSTRUCTION.
2.18 DEVICE PLATES: LEXAN (STA-KLEEN), SMOOTH FINISH IN STAINLESS STEEL - AS NOTED ON PLANS. MULTI-GANG OUTLET PLATES SHALL BE USED FOR MULTI-GANG BOXES.
2.19 NOT USED.
2.20 LIGHTING FIXTURES
A. ALL INTERIOR / BUILDING MOUNTED LIGHTING PROVIDED BY PX AND INSTALLED BY E.C.
B. ALL EXTERIOR SITE LIGHTING IS PROVIDED AND INSTALLED BY E.C.

PART 3 - EXECUTION

3.01 GENERAL INSTALLATION
A. THE ENTIRE ELECTRICAL INSTALLATION SHALL BE MADE IN A NEAT, APPROVED, FINISHED, AND SAFE MANNER.
B. INSPECT AND MAKE TIGHT ALL CONNECTIONS FOR ALL EQUIPMENT, INCLUDING FACTORY CONNECTIONS. TORQUE ALL CONNECTIONS PER MANUFACTURER'S RECOMMENDATIONS.
C. LIGHTING FIXTURES INSTALLED AND USED FOR LIGHTING DURING CONSTRUCTION SHALL BE RELAMPED WITH NEW LAMPS JUST PRIOR TO FINAL ACCEPTANCE OF THE PROJECT.
D. INSTALL SEISMIC RESTRAINT DEVICES FOR ALL CEILING MOUNTED EQUIPMENT, I.E. LAY-IN FIXTURES. PROVIDE GRID CLIPS AND #12 SLACK WIRES FROM FIXTURE CORNERS TO STRUCTURE.
3.02 RACEWAYS
A. INSTALL COMPLETE RACEWAY SYSTEMS FOR ALL ELECTRICAL CONDUCTORS INCLUDING TELEPHONE, SIGNAL, CONTROL, AND OTHER SYSTEMS.
B. UNLESS OTHERWISE NOTED, INSTALL ALL RACEWAYS CONCEALED. WHERE IT IS NOT FEASIBLE TO CONCEAL RACEWAYS, INSTALL AS DIRECTED BY ARCHITECT.
C. INSTALL EXPOSED RACEWAYS TO RUN PARALLEL OR AT RIGHT ANGLES TO STRUCTURAL BUILDING LINES WITH NEAT BENDS AND NEATLY OFFSET INTO TERMINATIONS.
D. IN EMPTY RACEWAY PROVIDE AND INSTALL A NO. 14 NYLON DRAG LINE.
E. INSTALL RACEWAYS WITH APPROVED HEAVY DUTY SUPPORTS, STRAPS, HANGERS, CONNECTORS, AND COUPLINGS AS REQUIRED TO MAINTAIN AN APPROVED INSTALLATION.
F. DO NOT INSTALL CONDUIT RACEWAYS IN CONCRETE SLABS.
H. MINIMUM CONDUIT SIZE TO BE 3/4" U.N.O.
3.03 GALVANIZED RIGID CONDUIT (GRC): ALL RACEWAYS SHALL BE GRC EXCEPT AS NOTED. CONDUIT, ELBOWS, AND STANDARD COUPLINGS SHALL BE HOT DIPPED GALVANIZED RIGID STEEL. IF PARTITIONS OR WALLS ARE SOLID CONCRETE OR ARE GROUTED SOLID WITH CONCRETE OR MORTAR, RIGID STEEL CONDUIT SHALL BE USED.
3.04 INTERMEDIATE METAL CONDUIT (IMC): IMC RACEWAY AND APPROVED FITTINGS WHERE PERMITTED BY APPLICABLE CODES AND REGULATIONS MAY BE USED IN LIEU OF RIGID STEEL CONDUIT, WHERE INSTALLED ABOVE FINISH GRADE AND ABOVE CONCRETE SLABS ON GRADE.
3.05 ELECTRIC METALLIC TUBING (EMT): EMT MAY BE USED WHERE CONCEALED IN AREAS ABOVE CEILINGS, FURRED SPACES, PARTITIONS OR WALLS. ALSO MAY BE EXPOSED, WHEN NOT IN HAZARDOUS AREAS, AREAS SUBJECT TO PHYSICAL DAMAGE, OR WHEN DIRECTLY EXPOSED TO RAIN OR WASH-DOWN.
3.06 FLEXIBLE METAL CONDUIT (FLEX): USE FLEXIBLE CONDUITS FOR CONNECTIONS TO MOTORS, WHERE SUBJECT TO MOVEMENT OR VIBRATION, AND LIQUID TIGHT WHERE EXPOSED TO MOISTURE OR OIL.
3.07 RIGID NONMETALLIC CONDUIT PVC SCHEDULE 40 MAY BE INSTALLED FOR DIRECT BURIAL RACEWAYS WHERE INSTALLED WITH MINIMUM COVERAGE PER NEC TABLE 300-5. ALL UNDERGROUND BENDS SHALL BE GRC.
3.08 OUTLET, PULL AND JUNCTION BOXES
A. UNLESS OTHERWISE SHOWN OR AS DIRECTED PRIOR TO INSTALLATION, OUTLET BOXES SHALL GENERALLY BE PLACED AT THE FOLLOWING HEIGHTS, CENTER OF BOX TO FINISHED FLOOR LEVEL.
B. WALL SWITCHES: 44".
C. CONVENIENCE RECEPTACLES: 18" (OR 4" ABOVE COUNTERS) AND/OR AS NOTED. (SIMILAR TYPE OUTLETS SHALL BE MOUNTED AT SAME HEIGHT IN EACH AREA). GROUNDING PIN AT BOTTOM.
D. OTHER OUTLET TYPES: REFER TO ELECTRICAL SYMBOL LIST ON THIS SHEET.
3.09 CONDUCTORS (COPPER ONLY)
A. USE SPECIFIED COLOR SCHEDULE FOR ALL WIRING. WHERE LARGE CONDUCTORS ARE NOT AVAILABLE IN COLORS, IDENTIFY WITH PERMANENT COLORED TAPE AT ALL TERMINATIONS, JUNCTION BOXES, ETC. COLOR CODING PER NEC.
B. MAKE TAPS, JOINTS, SPLICES, AND OTHER CONNECTIONS WITH FIXTURE CONNECTORS.
C. DO NOT INSTALL WIRING OR PULL WIRES, IN RACEWAYS UNTIL RACEWAY SYSTEM IS COMPLETE, CLEAN, DRY, AND FREE OF ALL FOREIGN MATERIALS. LUBRICATE AS REQUIRED.
D. MINIMUM CONDUCTOR SIZE TO BE #12 CU. THWN.
3.10 LIGHTING FIXTURES
A. LEAVE FIXTURES AND LAMPS CLEAN OF ALL DIRT, DUST, GREASE SPOTS AND DEBRIS. ALL GLASS, PLASTIC AND OTHER COMPONENTS SHALL BE UNSCRATCHED AND UNBROKEN.
B. FIT AND ADJUST ALL FIXTURES. WHERE STRUCTURAL CONDITIONS, PARTITIONS, FURNITURE, SHELVING, AND AIR CONDITIONING DIFFUSERS INTERFERE WITH THE LIGHTING FIXTURES AT LOCATIONS SHOWN, NOTIFY ARCHITECT IN WRITING AND RELOCATE AT NO ADDITIONAL COST AS DIRECTED.
C. FIXTURES WITH FINISH TRIM OR LENS FRAMES SHALL BE GASKETED AND BAFFLED TO PREVENT LIGHT LEAKS. INSTALL SO THAT NO LIGHT LEAKS EXIST.
D. FIXTURES MOUNTED DIRECTLY ON COMBUSTIBLE LOW-DENSITY CEILINGS SHALL MEET UL APPROVAL FOR THIS CONDITION AND BE PLAINLY MARKED AS SUCH.
3.11 GROUNDING
A. GROUNDING FOR DISTRIBUTION EQUIPMENT, EQUIPMENT AND MATERIALS WITH ELECTRICAL CONNECTIONS, ELECTRIC MOTOR FRAMES, ELECTRIC RACEWAY AND RELATED EQUIPMENT, SHALL BE EFFECTIVELY AND PERMANENTLY GROUNDED IN ACCORDANCE WITH PERTINENT SECTIONS OF ARTICLE 250 OF NEC. RESISTANCE TO GROUND SHALL NOT EXCEED 10 OHMS.
B. ALL RACEWAYS SHALL HAVE AN APPROVED SIZED, INSULATED, STRANDED COPPER GROUNDING CONDUCTOR.
C. WHERE RACEWAYS CONNECT TO A CONCENTRIC K.O. PROVIDE GROUNDING LOCKNUT OR BUSHING AND BOND WIRE EXTENDED AND BONDED TO ENCLOSURE, SIZE AS PER NEC.
3.12 DITCHING, EXCAVATION AND BACKFILLING: PERFORM ALL DITCHING, EXCAVATION AND BACKFILLING REQUIRED FOR THE ELECTRICAL WORK. PROVIDE AND MAINTAIN ALL SHEATHING, BRACING AND PROPER GUARDS FOR PREVENTION OF ACCIDENTS.
3.13 UTILITY COMPANY SERVICE CONTRACTOR TO BE RESPONSIBLE FOR COORDINATING AND PROVIDING REQUIRED WORK FOR SUPPLYING ELECTRICAL POWER AND COMMUNICATIONS UTILITIES TO THE PROJECT.
3.14 FINAL INSPECTION: TEST SYSTEM FOR SHORTS AND OPENS. FAULTY WIRING SHALL BE REMOVED AND REPLACED. AFTER SYSTEM IS CONNECTED COMPLETELY, TEST FOR INSULATION RESISTANCE. RESISTANCE LOWER THAN OUTLINED IN THE NEC, MANUFACTURER'S DATA, ETC., SHALL BE REMOVED AND REPLACED. ANY DEVICE, APPARATUS OR FIXTURE UNDER THIS CONTRACT SHOWING SUBSTANDARD READINGS SHALL BE REMOVED AND REPLACED AS DIRECTED BY THE ARCHITECT.
3.15 LABEL ALL RECEPTACLES WITH 3/16" HIGH BLACK LETTERING ON CLEAR TAPE. IF THE RECEPTACLE IS BLACK OR BROWN, PROVIDE WHITE LETTERING ON CLEAR TAPE. LABEL TO BE NEATLY CENTERED IN THE TOP SPACE OF THE COVERPLATE, AND SHALL INDICATE THE SERVING PANEL AND CIRCUIT ORIGIN.

GENERAL NOTES

1. THE ELECTRICAL DRAWINGS, SPECIFICATIONS AND GENERAL NOTES DESCRIBE THE SCOPE OF WORK AND THE DOCUMENTS SHALL BE USED FOR THE PURPOSE OF BIDDING, BUILDING DEPARTMENT REVIEW, AND TO SECURE THE NECESSARY CONSTRUCTION PERMIT ONLY.

2. BRANCH CIRCUITING AND WIRE COUNT MAY NOT BE INDICATED ON THESE PLANS. CONTRACTOR IS RESPONSIBLE TO COMPLETE THE BRANCH CIRCUIT WIRING IN ACCORDANCE WITH PLAN NOTES AND AS PERMITTED BY AUTHORITY. CONTRACTOR SHALL SUBMIT AS-BUILT DRAWINGS AS A PART OF RECORD DRAWING SUBMITTAL TO ARCHITECT AND AUTHORITY HAVING JURISDICTION (AHJ).

3. ELECTRICAL INSTALLATION SHALL BE IN ACCORDANCE WITH BOTH THE NATIONAL ELECTRICAL CODE (NEC) AND ALL LOCAL ORDINANCES / AMENDMENTS. WHERE CONFLICTS ARISE, THE MOST STRINGENT REQUIREMENT SHALL TAKE PRECEDENCE.

4. ALL ELECTRICAL EQUIPMENT SHOWN IS NEW, CONTRACTOR FURNISHED AND INSTALLED, UNLESS OTHERWISE NOTED. IF CONTRACTOR PROPOSES TO SUBSTITUTE SPECIFIC EQUIPMENT SPECIFIED, A REQUEST FOR CONSIDERATION SHALL BE SUBMITTED TO THE OWNER AND ENGINEER PRIOR TO THE BID IN WRITING. ALL SUBSTITUTIONS MUST BE REVIEWED BY THE ENGINEER. SUCH REVIEW SHALL NOT RELIEVE THE CONTRACTOR FROM COMPLYING WITH THE REQUIREMENTS OF THE DRAWINGS AND SPECIFICATIONS. NO SUBSTITUTIONS SHALL BE IMPLEMENTED WITHOUT THE APPROVAL OF THE ENGINEER OR RECORD. THE CONTRACTOR SHALL BE RESPONSIBLE, AT HIS OWN EXPENSE, FOR ANY CHANGE RESULTING FROM HIS PROPOSED SUBSTITUTIONS WHICH AFFECT OTHER PARTS OF HIS OWN WORK, OR SUBSTITUTIONS WHICH AFFECT THE WORK OF OTHER CONTRACTORS.

5. THE ELECTRICAL DRAWINGS, CONDUIT RUNS, WIRING AND ELECTRICAL INFORMATION ARE DIAGRAMMATIC ONLY. DO NOT SCALE THE ELECTRICAL DRAWINGS TO DETERMINE THE EXACT LOCATION OF EQUIPMENT OR OUTLETS. COORDINATE WITH ARCHITECT/OWNER PRIOR TO ROUGH-IN.

6. REFER TO THE ARCHITECTURAL REFLECTED CEILING PLAN FOR EXACT LOCATIONS OF ALL LIGHTING FIXTURES, CEILING MOUNTED OUTLETS AND EQUIPMENT.

7. ALL DEVICE MOUNTING HEIGHTS AND EXACT LOCATIONS SHALL BE COORDINATED WITH ARCHITECTURAL DRAWINGS AND ELEVATIONS PRIOR TO ROUGH-IN.

8. IT SHALL BE THE CONTRACTOR'S RESPONSIBILITY TO VERIFY TYPES OF CEILING SYSTEM. FIXTURES LOCATED IN DAMP OR WET LOCATIONS SHALL BE LISTED AND LABELED FOR USE IN SUCH LOCATIONS. CONTRACTOR SHALL PROVIDE ALL REQUIRED TRIMS AND HARDWARE TO ACCOMMODATE CEILING TYPE.

9. ALL RECESSED LIGHTING FIXTURES, PANELBOARDS, SWITCHES, ETC., MOUNTED IN FIRE RATED STRUCTURES SHALL BE ENCLOSED WITH AN APPROVED ENCLOSURE CARRYING THE SAME FIRE RATING AS THE STRUCTURE. SEAL ALL PENETRATIONS THROUGH FIRE RATED WALLS, CEILINGS, FLOORS, ETC., TO MAINTAIN THE FIRE RATING. FURNISH AND INSTALL FIRE RATED ENCLOSURE FOR ALL EQUIPMENT PENETRATING INTO FIRE RATED ENVELOPS, SPACES ETC.

10. PORTIONS OF THE CEILING SYSTEMS MAY BE INACCESSIBLE, THEREFORE, THE CONTRACTOR SHALL STRATEGICALLY LOCATE ACCESS BOXES, ETC., WHICH SHALL BE READILY ACCESSIBLE. ALL LIGHTING FIXTURE WIRING, BALLASTS, J-BOXES, ETC. SHALL BE ACCESSIBLE FROM FIXTURE OPENING.

11. ALL WIRING AND ELECTRICAL EQUIPMENT SERVING MECHANICAL AND PLUMBING EQUIPMENT SHALL BE IN ACCORDANCE WITH MECHANICAL AND PLUMBING SPECIFICATIONS AND ASSOCIATED DRAWINGS. CONTRACTOR SHALL OBTAIN THE REQUIRED MECHANICAL AND PLUMBING DRAWINGS AND PROVIDE ALL EQUIPMENT, RACEWAYS, WIRING, FITTINGS, ETC., AS INDICATED ON CONSTRUCTION DOCUMENTS.

12. ALL FINAL CONNECTIONS TO OWNER FURNISHED EQUIPMENT SHALL BE MADE BY THE CONTRACTOR, UNLESS OTHERWISE NOTED. VERIFY ELECTRICAL CHARACTERISTICS AND U.L. LISTING PRIOR TO CONNECTION.

13. THE CONTRACTOR SHALL VERIFY THE LOAD AND INPUT VOLTAGE OF ALL PROVIDED EQUIPMENT TO MATCH LOAD INPUT OF ALL EQUIPMENT BEING SUBSTITUTED.

14. ELECTRICAL OUTLETS ON OPPOSITE SIDES OF FIRE RATED WALLS AND PARTITIONS MUST BE SEPARATED BY DISTANCE OF 24 IN. HORIZONTALLY, IN ACCORDANCE WITH I.B.C. SEC. 711.3.2. OPENINGS IN FIRE RATED WALLS MUST BE FIRE STOPPED.

15. PROVIDE AN ADDITIONAL JUNCTION BOX EXTENSION RING (SIZE AS REQUIRED) WHERE THE NUMBER OF CONDUCTORS EXCEEDS THE MAXIMUM ALLOWED FOR A GIVEN JUNCTION POINT OR OUTLET.

16. CONDUCTORS SHALL BE COPPER THHN/THWN 600 VOLT INSULATION UNLESS OTHERWISE NOTED. USE PROPER TEMPERATURE RATING OF CONDUCTORS BASED ON THE AMBIENT AIR TEMPERATURE WHERE CONDUCTORS ARE BEING USED. HIGHER AMPACITY CONDUCTOR AND LARGER RACEWAY SHALL BE PROVIDED TO OFFSET THE AMPACITY CORRECTION FACTORS AS INDICATED IN NEC ARTICLE 310 AND ELSEWHERE IN CODE.

17. ALL FLUORESCENT BALLASTS AND LAMPS PROVIDED BY PANDA EXPRESS.

18. DO ALL DRILLING, CUTTING, AND/OR CHANNELING AS REQUIRED FOR ELECTRICAL WORK INDICATED OR HEREIN SPECIFIED. ALL HOLES, CURBS, ETC., IN FLOORS, CEILINGS AND WALLS SHALL BE PATCHED, UNLESS INDICATED OTHERWISE. PAINT ALL EXPOSED ELECTRICAL RACEWAYS, CABINETS, ENCLOSURES AND FITTING TO MATCH IN COLOR TO ADJACENT SURFACES IN FINISHED AREAS. (PROTECT UL LISTINGS LABELS FROM PAINT).

19. EMERGENCY LIGHTING SHALL BE PROVIDED PER U.B.C. PROVIDE ADDITIONAL EMERGENCY ILLUMINATION AS REQUIRED BY AUTHORITIES HAVING JURISDICTIONS.

20. ALL ELECTRICAL EQUIPMENT SHALL BE BRACED OR ANCHORED TO RESIST A HORIZONTAL FORCE ACTING IN ANY DIRECTION USING THE FOLLOWING CRITERIA.

FIXED EQUIPMENT ON GRADE: OPERATING WEIGHT	33% OF
FIXED EQUIPMENT ON STRUCTURE: OPERATING WEIGHT	50% OF
EMERGENCY POWER AND COMMUNICATION & EQUIPMENT ON GRADE: OPERATING WEIGHT	50% OF
EMERGENCY POWER AND COMMUNICATION ON STRUCTURE: OPERATING WEIGHT	75% OF

FOR FLEXIBLE MOUNTED EQUIPMENT DOUBLE THE ABOVE VALUES. SIMULTANEOUS VERTICAL FORCE - USE 1/3 HORIZONTAL FORCE.
CONDUIT, BUSDUCT, CABLE TRAY, WIREWAYS, ETC., SHALL BE BRACED IN ACCORDANCE WITH "GUILDELINES", PUBLISHED BY SMACNA AND PPIC.

NOTICE
THESE DRAWINGS ARE SUBJECT TO APPROVAL BY THE BUILDING DEPARTMENT, FIRE MARSHAL, UTILITY COMPANY AND OTHER AUTHORITIES HAVING JURISDICTION (AHJ). BY THE ACT OF SUBMITTING A BID PROPOSAL FOR WORK, THE CONTRACTOR INDICATES THAT HE OR SHE HAS REVIEWED THE PLANS THOROUGHLY AND ACCEPTED FULL RESPONSIBILITY OF PLAN CORRECTIONS AND ASSOCIATED CONSTRUCTION COSTS REQUIRED BY AHJ.

NOTICE
THESE DRAWINGS ARE SUBJECT TO APPROVAL BY THE BUILDING DEPARTMENT, FIRE MARSHAL, UTILITY COMPANY AND OTHER AUTHORITIES HAVING JURISDICTION (AHJ). BY THE ACT OF SUBMITTING A BID PROPOSAL FOR WORK, THE CONTRACTOR INDICATES THAT HE OR SHE HAS REVIEWED THE PLANS THOROUGHLY AND ACCEPTED FULL RESPONSIBILITY OF PLAN CORRECTIONS AND ASSOCIATED CONSTRUCTION COSTS REQUIRED BY AHJ.

MC CABLE SHALL NOT BE USED. PREWIRED MC CABLE WHIPS FROM LIGHTING FIXTURES ARE ACCEPTABLE WHEN SUPPLIED WITH THE FIXTURE AND NO LONGER THAN 72".

ELECTRICIAN TO PROVIDE STAINLESS STEEL COVER PLATES FOR ALL LOW VOLTAGE OUTLETS.

IF PROVIDED UNDER SLAB ALL UNDERGROUND CONDUIT SHALL BE 12" BELOW FINISHED GRADE.

ELECTRICAL SYMBOLS LIST

NOTE: ALL DIMENSIONS GIVEN ARE TO DEVICE CENTERLINES. CONTRACTOR TO COORDINATE ALL INSTALLATIONS.

POWER DISTRIBUTION

- SM — SINGLE-POLE SWITCH, MANUAL MOTOR STARTER
- J — J-BOX (WITH FLEX CONNECTION TO EQUIPMENT.)
- D — DISCONNECT SWITCH, WITH RATING AS SHOWN ON PLANS
- M — COMBINATION DISCONNECT SWITCH / MOTOR STARTER FURNISHED BY ELECTRICAL CONTRACTOR.
- BRANCH CIRCUITRY CONCEALED IN WALL OR CEILING WITH ADDITIONAL #12 INSULATED GND. U.N.O. HACHURES INDICATE NUMBER OF CURRENT CARRYING CONDUCTORS. 'X' INDICATES ADDITIONAL INSULATED, ISOLATED GROUND CONDUCTORS.
- BRANCH CIRCUITRY HOMERUN TO PANEL AS NOTED ON PLANS
- INDICATES EXTERIOR UNDERGROUND WIRE RUNS.

LIGHTING & LIGHTING CONTROLS

- L1 — LIGHTING FIXTURE. SUBSCRIPT LETTER DENOTES FIXTURE TYPE AS DESCRIBED IN LIGHT FIXTURE SCHEDULE.
- $ — SINGLE-POLE SWITCH @ 44" A.F.F. U.N.O. LOWER CASE LETTER DENOTES FIXTURE CONTROL. 300V. 20A.
- $D — LEVITON Renoir II WALLBOX DIMMER - SINGLE-POLE SWITCH @ 44" A.F.F. U.N.O. LOWER CASE LETTER DENOTES FIXTURE CONTROL. 120V, BALLAST 0-10V
- OS$ — OCCUPANCY SENSOR SWITCH WITH OFF CONTROL, AND ADJUSTABLE SETTINGS FOR TIME OFF DELAY, FOOTCANDLE LEVEL, AND MASKING. WATTSTOPPER OR EQUAL, MOUNT AT 44" A.F.F. U.N.O. USE PW-100 FOR OFFICES/CONF/ETC.
- DS — LEVITON PROVOLT DIMMING DAYLIGHT SENSOR FOR SIDELIT DAYLIGHTING ZONES. LOCATE AND INSTALL PER MANUFACTURER'S INSTRUCTIONS. ALL CONTROLS SHALL COMPLY WITH LOCAL ENERGY CODE REQUIREMENTS. PROVIDE LOCAL MANUAL SWITCH AS SHOWN IN THE LIGHTING PLAN FOR ON / OFF CONTROL

ABBREVIATIONS

A	AMPERES	M.C.B.	MAIN CIRCUIT BREAKER
AL	ALUMINUM	M.L.O.	MAIN LUGS ONLY
A.F.F.	ABOVE FINISHED FLOOR	MTD.	MOUNTED
A.F.G.	ABOVE FINISHED GRADE	P.	POLE
C.	CONDUIT	SW.	SWITCH
C/B	CIRCUIT BREAKER	T.M.B.	TELEPHONE MOUNTING BOARD
CU.	COPPER	TYP.	TYPICAL
DISC.	DISCONNECT	U.N.O.	UNLESS NOTED OTHERWISE
F.	FUSE	V.	VOLTS
GFI	GROUND FAULT CURRENT INTERRUPTER	W.	WIRE
GND.	GROUND	W.P.	WEATHERPROOF
H.P.	HORSE POWER	XFMR	TRANSFORMER
k	1000	Ø	PHASE
E.C.	ELECTRICAL CONTRACTOR		
G.C.	GENERAL CONTRACTOR		

RECEPTACLES & COMMUNICATIONS OUTLETS

- DUPLEX CONVENIENCE OUTLET, 20A, 125V, MTD @ 18" A.F.F. U.N.O.
- SIMPLEX CONVENIENCE OUTLET, 20A, 125V, MTD @ 18" A.F.F. U.N.O.
- ISOLATED GROUND SIMPLEX CONVENIENCE OUTLET (ORANGE), 20A.,125V., MTD @ +18" A.F.F.
- DUPLEX CONVENIENCE OUTLET MOUNTED 3" ABOVE COUNTERTOP BACKSPLASH OR APPROXIMATELY 44" A.F.F.
- GFCI DUPLEX CONVENIENCE OUTLET, 20A, 125V, 5 mA TRIP, MTD @ 18" A.F.F. U.N.O.
- GFCI DUPLEX CONVENIENCE OUTLET MOUNTED 3" ABOVE COUNTERTOP BACKSPLASH OR APPROXIMATELY 44" A.F.F.
- TELEPHONE OUTLET. PROVIDE FLUSH J-BOX @ + 18" AFF U.N.O W/ 1" CONDUIT W/ PULL WIRE TO MANAGER'S STATION. 'w' SUBSCRIPT INDICATES WALL PHONE AT 54" AFF.
- DATA OUTLET. PROVIDE FLUSH J-BOX @ + 18" A.F.F. U.N.O W/ 1" CONDUIT WITH PULL WIRE TO MANAGER'S STATION.
- COMBINATION TEL/DATA OUTLET. PROVIDE FLUSH J-BOX @ + 18" AFF U.N.O W/ 1" CONDUIT WITH PULL WIRE TO MANAGER'S STATION.
- T.V. SYSTEM DATA OUTLET. PROVIDE FLUSH J-BOX @ + 18" A.F.F. U.N.O W/ 1" CONDUIT WITH PULL WIRE TO MANAGER'S STATION. WHEN SHOWN ADJACENT RECEPTACLE, MOUNT AT RECEPTACLE HEIGHT. REFER TO RECEPTACLE FOR MOUNTING HEIGHT.
- SPECIAL PURPOSE RECEPTACLE MTD. @ 18" A.F.F. U.N.O., AMPERAGE AND PHASE AS NOTED ON PLANS, NEMA CONFIGURATION AS REQ'D.
- ISOLATED GROUND DUPLEX CONVENIENCE OUTLET (ORANGE), 20A.,125V., MTD @ +18" A.F.F.
- DOUBLE DUPLEX CONVENIENCE OUTLETS UNDER COMMON COVER
- ISOLATED DOUBLE DUPLEX CONVENIENCE OUTLETS (ORANGE) 20A.,125V.
- S — SPEAKER

FIRE ALARM

- MANUAL PULL STATION WITH KEYED RESET. MOUNT UNIT AT 44" A.F.F. ALIGN WITH LIGHT SWITCH IF APPLICABLE.
- XENON STROBE UNIT MOUNTED AT 80" A.F.F. OR 6" BELOW CEILING (WHICHEVER IS LOWER). MUST MEET OR EXCEED A.D.A. REQUIREMENTS.
- COMBINATION XENON STROBE AND HORN/CHIME UNIT MOUNTED AT 80" A.F.F. OR 6" BELOW CEILING (WHICHEVER IS LOWER). UNIT MUST MEET OR EXCEED A.D.A. REQUIREMENTS.
- FACP — FIRE ALARM CONTROL PANEL. MOUNT TOP OF UNIT AT 72" A.F.F.
- FAAP — FIRE ALARM ANNUNCIATION PANEL. MOUNT TOP OF UNIT AT 72" A.F.F.
- PHOTO ELECTRIC TYPE SMOKE DETECTOR.
- DUCT MOUNTED PHOTO ELECTRIC SMOKE DETECTOR.
- RATE OF RISE HEAT DETECTOR.

FIELD VERIFICATION:

1. WITHIN (10) TEN BUSINESS DAYS OF "NOTICE TO PROCEED" THE CONTRACTOR SHALL FIELD VERIFY EXISTING ELECTRICAL CONDITIONS IN THE PROPOSED PROJECT AREA.

2. THE CONTRACTOR SHALL NOTIFY BASE ENGINEERING AND THE ARCHITECT OF ALL DEVIATIONS FROM THESE PLANS WITHIN (15) FIFTEEN BUSINESS DAYS.

3. THE CONTRACTOR SHALL PROVIDE TIMELY ASSISTANCE IN PROVIDING FIELD INFORMATION TO THE ENGINEER FOR DESIGN CHANGES TO ADDRESS ANY REQUIRED FIELD CHANGES.

PEC
PIVOT ENGINEERING CONSULTANTS INC.
11226 EVERGREEN LOOP
CORONA, CA 92883
(909) 610-5364

PANDA EXPRESS CHINESE KITCHEN
PANDA RESTAURANT GROUP INC.
1683 Walnut Grove Ave.
Rosemead, California
91770
Telephone: 626.799.9898
Facsimile: 626.372.8288

All ideas, designs, arrangement and plans indicated or represented by this drawing are the property of Panda Express Inc. and were created for use on this specific project. None of these ideas, designs, arrangements or plans may be used by or disclosed to any person, firm, or corporation without the written permission of Panda Express Inc.

REVISIONS:

ISSUE DATE:

1	35% SUBMITTAL	06/26/2023
2	95% SUBMITTAL	10/09/2023
3	95% RESUBMITTAL	11/20/2023

DRAWN BY: STAFF

PANDA PROJECT #:

ARCH PROJECT #:

GARY WANG
& ASSOCIATES, INC.
1000 Corporate Center Dr., Ste. 550
Monterey Park, CA 91754
TEL: (626) 288-6898 FAX: (626) 768-7101
http://www.garywang.com

STATE OF TEXAS
ANMAR HIASSAT
133591
LICENSED
PROFESSIONAL ENGINEER

BID SET - 01/12/2024 (NOT FOR CONSTRUCTION)

PANDA EXPRESS
POST EXCHANGE MINI MALL
3390 WILLIAM WY
FT SAM HOUSTON, TX

E-000
ELECTRICAL SYMBOLS
SPECIFICATIONS, NOTES

EQUIPMENT SCHEDULE

PLUMBING		
FS	INDIRECT CONNECTION TO FLOOR SINK	
D	DIRECT CONNECTION	
RIH	ROUGH IN HEIGHT (TO CENTER OF CONNECTION)	

ELECTRICAL		
D	DIRECT CONNECTION	
C	CONVENIENT OUTLET	
FSO	FLOOR STUB OUT	
DC	DROPPED CORD	

DESCRIPTION		
P	PANDA EXPRESS VENDOR	
G.C.	GENERAL CONTRACTOR	
EC	ELECTRICAL CONTRACTOR	
KEC	KITCHEN EQUIPMENT COMPANY	
S	SERVING AREA	
SC	SIGN COMPANY	
(E)	EXISTING	
(O)	OWNER	

INSTALL BY	SUPPLY BY	GAS			WASTE		COLD WATER		HOT WATER		CONNECTION		LOAD	PHASE	H.P.	VOLTS	REMARKS	DIMENSIONS	MANUFACTURER	MODEL #	EQUIPMENT	NO.
		K BTU	R.I.H.	SIZE	TYPE	SIZE	R.I.H.	SIZE	R.I.H.	SIZE	R.I.H.	TYPE	WATT					W x D x H (ø x H)				
SERVING AREA EQUIPMENT																						
G.C.	O																SEE DETAIL	SEE PLAN	KEC	CUSTOM	HOT WELLS COUNTER, SERVICE	1B
G.C.	O																SEE DETAIL	SEE PLAN	KEC	CUSTOM	SNEEZE GUARD	1S2
G.C.	O										REF. ELEC.	D	840W	1		120	3 HEATING ELEMENTS	43.06" X 5.25" X 3.03"	KEC		43" RADIANT TOP HEATER	1S2b1
G.C.	O											D	15A	1		120	SEE DETAIL	SEE PLAN	KEC	CUSTOM	CASHIER & BEVERAGE. COUNTER	2Q
G.C.	O											C	650W	1		120	INDUCTION DRY WELL	15 3/4" DIA X 11"D	IO CONTROLS	IDW650L	INDUCTION WELL - 17QT	3F
G.C.	O											C	650W	1		120	INDUCTION DRY WELL	12 1/2" DIA X 11"D	IO CONTROLS	IDW650S	INDUCTION WELL - 11QT	3G
																		SEE PLAN	KEC	CUSTOM	DROP-IN ICE BIN	5C
KITCHEN EQUIPMENT																						
G.C.	O	490	10"	1-1/2"	FS	2"	10"	1/2"									SEE DETAIL	95"x42"	KEC	CUSTOM	124" CHINESE RANGE	20
G.C.	O	122 EA.	14"	1 1/2"							24"	C	–	1		120		47"x31-1/2"x51-5/8"	FRYMASTER	FMJ350-PE	FRYERS	21A
G.C.	O										36"	DC	17.3A	1		208V	KH 6-50P	24"X27 7/8"X15 1/2"	VULCAN	VMCS-101	24" CLAMSHELL TOP W/ 24" GAS GRIDDLE	23C
G.C.	O	27	20"	3/4"														24"X31-1/2"X15 1/2"	VULCAN	MSA-24		
G.C.	O										24"	C	14.8A	1		120	NEMA 5	19.9"X34.5"X41.3"	WINSTON	HA4005	RICE HOLDING CABINET	24Hr
G.C.	O	34.6	10" & 30"	3/4"														19"øx17"	RINNAI	RER-55AS	RICE COOKER	25A
G.C.	O										24"	C	12A	1	1/2	115	NEMA 5-15P	48"X30"X29 3/4"	RANDELL	65348-290	48" WORKTOP FREEZER	30Jn
G.C.	O										24"	C	12A	1	1/2	120	NEMA 5-15P	84"x33"x35"	RANDELL	9050K-7MP2-NSB	84" REF. PREP. TABLE	34ARn
G.C.	O										24"	C	5.5A	1	1/4	120	NEMA 5-15P	32x33"x35"	RANDELL	9412-32-7MPR1	32" REF. PREP. TABLE	34n
G.C.	O				FS	2"	14"	3/4"	14"	3/4"								100"X30"	KEC	CUSTOM-(PS-100L)	POT SINK	40A
G.C.	O				FS	2"	14"	3/4"	14"	3/4"							1 COMPARTMENT	42"x30"	KEC	CUSTOM-(VS-42)	42" VEGETABLE SINK (R)	41B
G.C.	O				FS	2"	14"	3/4"	14"	3/4"							1 COMPARTMENT	42"x30"	KEC	CUSTOM-(VS-42)	42" VEGETABLE SINK (L)	41C
G.C.	O										18GA POLISHED (WALL MTD. @ 59" A.F.F.)							SEE PLAN	KEC	CUSTOM (NSF)	12"D S.S. WALL MTD. SHELF	43A
G.C.	O										18GA POLISHED (WALL MTD. @ 71" A.F.F.)							SEE PLAN	KEC	CUSTOM (NSF)	16"D S.S. WALL MTD. SHELF	43B
G.C.	O										4 SHELVES MTD. @ 8" A.F.F., 26" A.F.F., 54" A.F.F., 72" A.F.F.							SEE PLAN	GOLD BOND	ISS	18"D WIRE SHELVES	44A
G.C.	O										4 SHELVES MTD. @ 36" A.F.F., 48" A.F.F., 60" A.F.F., 72" A.F.F.							SEE PLAN	GOLD BOND	ISS	24"D WIRE SHELVES	44C
G.C.	O																	24"x 30" x 24"	KEC	CUSTOM	S.S. RICE COOKER STAND	46A
G.C.	O																	36 1/2"x 33" x 28"	KEC	CUSTOM	S.S. GRILL STAND	46K
G.C.	O										50"	C	2.8A	1	1/3	120		12 1/2"x21"	PIPER	GSM-4	FOOD PROCESSOR	53
SMALL EQUIPMENT																						
G.C.	O					2"	24"	1/2"	24"	1/2"							W/TOWEL & SOAP	SEE PLAN	CUSTOM	CUSTOM	HAND SINK ON COUNTER	6B
G.C.	O					2"	24"	1/2"	24"	1/2"							W/TOWEL & SOAP	14 1/4"x18 1/2"	GSW	HS-1615NPASS	HAND SINK	45A
G.C.	O										24"	C	105W	1		120	ON S.S. COUNTER	17" ø	WELBON	WRS-1088BS	RICE WARMER	54A
G.C.	O										84"	DC	1800W	1		208	PLUG: NEMA 6-15R	17 1/2"X13 5/8"X22 9/16"	SHARP	R-CD1800M	MICROWAVE	55A
G.C.	G.C.																TYPE-K (FINAL LOCATION TBD)				FIRE EXTINGUISHER	56
G.C.	O																	SEE DETAIL	SAN-JAMAR	SANJT7500TBK	PAPER TOWEL DISPENSER	60D
G.C.	O																WALL MOUNT	12"x15"x78"	GRE	5-TIER	LOCKER (2)	61B
G.C.	O																					
POS EQUIPMENT																						
O	O																SEE ELEV. ON E-200	48" X 28" X 42"	GRE	CUSTOM	MANAGER STATION	49A
O	O										REF ELEV	C	100W	1		120	SEE DETAIL			CUSTOM	COMPUTER	83A
O	O										REF ELEV	C	50W	1		120	SEE PLAN				POS PRINTERS	86A
O	O										REF ELEV	C	50W	1		120					FAX	87
O	O										REF ELEV	C	500W	1		120	CUSTOM	11 1/4"x14 1/2"x9"	RESNOS	S 460	CASH REGISTER SYSTEM	94
MEP EQUIPMENT																						
G.C.	O																SEE MECH. DWG.	SEE PLAN	CAPTIVE AIR	CUSTOM	EXHAUST HOOD	M1
G.C.	O																SEE MECH. DWG.	SEE PLAN	CAPTIVE AIR	CUSTOM	HOOD CONTROL PANEL	M4
G.C.	O																SEE MECH. DWG	SEE PLAN	CAPTIVE AIR		FIRE SUPPRESSION SYSTEM	M5
G.C.	O																SEE MECH/ELEC DWG	SEE PLAN			RECESSED ANSUL PULL BOX	M6
G.C.	G.C.					3"	36"	–	36"	–		D					FLOOR TYPE	24" X 24" X 13"	G.S.W. PHONE:1800-897-5999	SE2424FM	STAINLESS STEEL MOP SINK	P1
O	O										48"	C	50W	1		120	SEE PLAN	15" X 13"	DELL (17" COLOR)		LCD MONITOR-MANAGER	94-2-16
G.C.	G.C.																SEE ELEC. DWG			EXISTING	ELECTRICAL PANEL	E7(E)
G.C.	G.C.																SEE ELEC. DWG			RELOCATED	ELECTRICAL PANEL	E7(R)
SIGNAGE																						
G.C.	O										REF ELEV	C	130W	1		120	DEDICATED CIRCUIT	48.9" X 28.1" X 1.3"	LG	55WS50BS-B	LCD DISPLAY MONITOR	96-3A
SC	SC																			SEE SIGN BOOK	LOCK-UP LOGO	S1
SC	SC																			SEE SIGN BOOK	LETTER SET SIGNAGE	S2
FURNITURE																						
G.C.	G.C.																SEE PLAN		CUSTOM – QUARTZ	URAL GRAY	SERVICE COUNTER	F1d
MISC. EQUIPMENT																						
G.C.	O																				SANITIZER BUCKET SHELF	SS-01

PANDA RESTAURANT GROUP INC.
1683 Walnut Grove Ave.
Rosemead, California
91770
Telephone: 626.799.9898
Facsimile: 626.372.8288

All ideas, designs, arrangement and plans indicated or represented by this drawing are the property of Panda Express Inc. and were created for use on this specific project. None of these ideas, designs, arrangements or plans may be used by or disclosed to any person, firm, or corporation without the written permission of Panda Express Inc.

REVISIONS:

ISSUE DATE:

1	35% SUBMITTAL	06/26/2023
2	95% SUBMITTAL	10/09/2023
3	95% RESUBMITTAL	11/20/2023

DRAWN BY: STAFF

PANDA PROJECT #:

ARCH PROJECT #:

GARY WANG
& ASSOCIATES, INC.
1000 Corporate Center Dr., Ste. 550
Monterey Park, CA 91754
TEL: (626) 288-6898 FAX: (626) 768-7101
http://www.garywang.com

STATE OF TEXAS
ANMAR HIASSAT
133591
LICENSED
PROFESSIONAL ENGINEER

PANDA EXPRESS

POST EXCHANGE MINI MALL
3390 WILLIAM WY
FT SAM HOUSTON, TX

PIVOT ENGINEERING CONSULTANTS INC.
11226 EVERGREEN LOOP
CORONA, CA 92883
(909) 610-5364

BID SET - 01/12/2024 (NOT FOR CONSTRUCTION)

E-001

ELECTRICAL SCHEDULES

1. ALL CIRCUITRY/CONDUIT FOR FRONT LINE EQUIPMENT TO BE ROUTED IN CASEWORK TO J-BOX IN WALL AND CONCEALED IN WALL.
2. NOT USED.
3. PROVIDE (2) 1-1/2" CONDUITS WITH PULL STRINGS FROM CASH REGISTER TO MANAGER STATION. SEE P.O.S. AND SERVICE LINE ELEVATIONS, 3/E-200.
4. NOT USED.
5. ANSUL PULL STATION. REFER TO DETAIL, 2/E-400.
6. ELECTRIC GRILL '23C': FEED WITH 3 #8, #10 GROUND. 3/4" CONDUIT. PROVIDE A GFI TRIP DEVICE IN ACCORDANCE WITH NEC 210.8(B)(2). INSTALL IN ACCESSIBLE LOCATION IN THIS GENERAL AREA, OR AS DIRECTED BY THE OWNER, ARCHITECT OR ENGINEER. SEE DETAIL 4/E-200 FOR ADDITIONAL INFORMATION.
7. FURNISH AND INSTALL A HUBBELL GFSTBF20 FACELESS GFCI (OR EQUIVALENT) FOR CIRCUIT FEEDING EQUIPMENT BENEATH THE KITCHEN HOOD WHICH UTILIZE SINGLE 20A, 120V RECEPTACLES. INSTALL IN ACCESSIBLE LOCATION IN THIS GENERAL AREA, OR AS DIRECTED BY THE OWNER, ARCHITECT OR ENGINEER. PROVIDE ADDITIONAL OUTLETS AS REQUIRED TO FEED ALL SUCH LOADS BENEATH HOOD. FASTEN A PLASTIC LABEL STATING CIRCUIT AND EQUIPMENT SERVED FOR EACH OUTLET.
8. HOOD CONTROL PANEL/ANSUL SYSTEM CABINET. MOUNT CABINET DIRECTLY BELOW T-BAR CEILING.
9. PROVIDE 2-GANG J-BOX @ 48" AFF FOR HOOD CONTROL SWITCHES. REFER TO M-400 AND M-401.
10. FIRE SUPPRESSION SHUTDOWN CONTACTOR LOCATED ABOVE CEILING, REFER TO 13/E400.
11. ALL DEVICES UNDER HOOD TO BE PROVIDED AND INSTALLED WITH GROUND FAULT CIRCUIT BREAKER AND WATERPROOFING BOX (RED DOT #CKSUV). REFER TO COOKLINE ELECTRICAL ELEVATIONS, 6/E-200. ROUTE HOMERUN THROUGH CONTRACTOR INTERFACED WITH THE HOOD FIRE SUPPRESSION SYSTEM. REFERENCE 13/E-400 FOR ADDITIONAL INFORMATION.
12. GAS GRIDDLE '23C': FEED WITH (2) #10, (1) #10 GROUND, 3/4" CONDUIT. REFER TO 4/E-200.
13. NOT USED.
14. SEE SWITCH BANK DETAIL DETAIL 4/E-101.
15. CONNECT HEAT LAMPS TO COUNTER-MOUNTED SWITCH PROVIDED AND INSTALLED BY CONTRACTOR. COORDINATE EXACT LOCATION WITH KITCHEN EQUIPMENT PROVIDER.

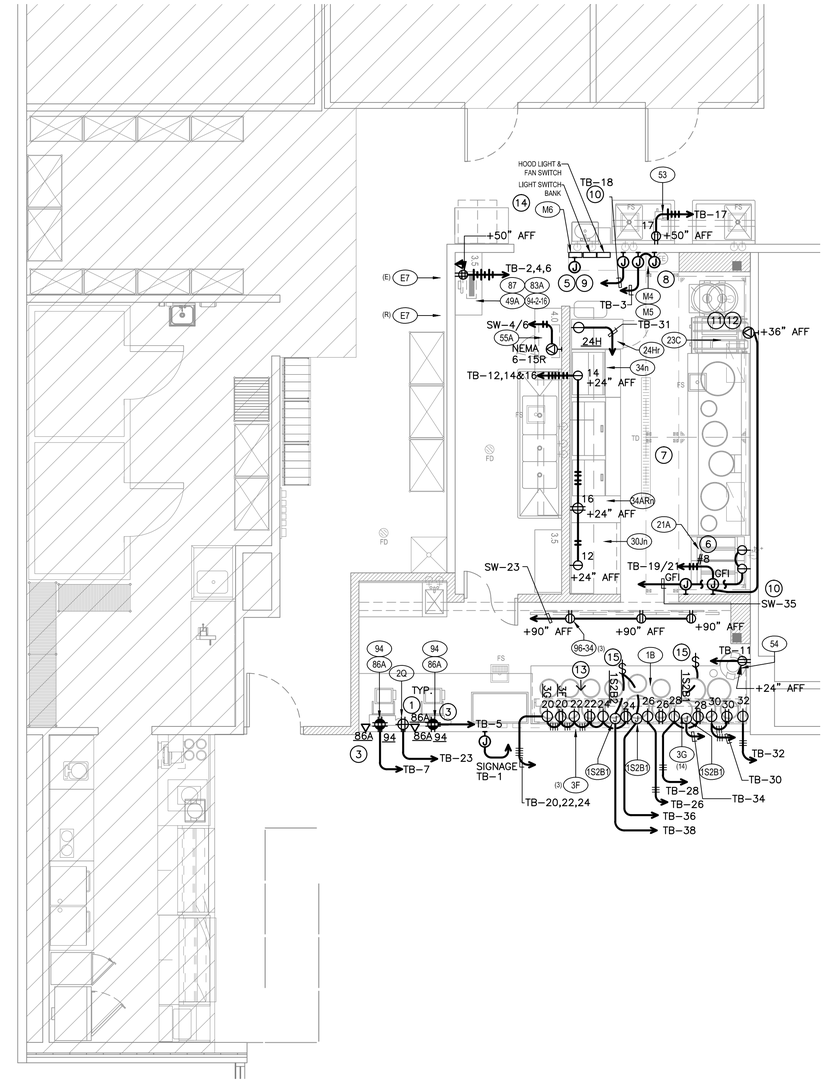

- VERIFY QUANTITIES AND REQUIREMENTS OF ALL HVAC & KITCHEN EQUIPMENT PRIOR TO ROUGH IN.
- ALL TELEPHONE/DATA/TV CABLES AND WIRES, AND TERMINATIONS OF ALL REQUIRED CABLE AND JACKS WILL BE INSTALLED BY THIRD PARTY.
- POWER SUPPLY FOR COMPUTER AND CASH REGISTER (86A & 94) SHALL BE ON THE SAME CIRCUIT BREAKER, W/ISOLATED GROUND & ORANGE RECEPTACLE.
- ALL CIRCUITRY SHOWN WITHOUT TICKS SHALL HAVE (2) WIRES PLUS EQUIPMENT GROUNDING CONDUCTOR.
- WHEN WORKING IN JURISDICTIONS WHICH HAVE ADOPTED THE 2017 NEC OR LATER, ALL MULTI-WIRE BRANCH CIRCUITS SHALL HAVE SEPARATE NEUTRALS TO MEET THE REQUIREMENTS OF 2017 NEC 210.4(B).
- ALL UNDERGROUND CONDUIT SHALL BE 12" BELOW F.F.

PIVOT ENGINEERING CONSULTANTS INC.
11226 EVERGREEN LOOP
CORONA, CA 92883
(909) 610-5364

#		
POWER PLAN KEYED NOTES	3	NOT TO SCALE E-100
POWER PLAN GENERAL NOTES	2	NOT TO SCALE E-100
POWER FLOOR PLAN	1	Scale: 1/4"=1'-0" E-100

PANDA RESTAURANT GROUP INC.
1683 Walnut Grove Ave.
Rosemead, California
91770
Telephone: 626.799.9898
Facsimile: 626.372.8288

All ideas, designs, arrangement and plans indicated or represented by this drawing are the property of Panda Express Inc. and were created for use on this specific project. None of these ideas, designs, arrangements or plans may be used by or disclosed to any person, firm, or corporation without the written permission of Panda Express Inc.

REVISIONS:

ISSUE DATE:

1	35% SUBMITTAL	06/26/2023
2	95% SUBMITTAL	10/09/2023
3	95% RESUBMITTAL	11/20/2023

DRAWN BY: STAFF

PANDA PROJECT #:

ARCH PROJECT #:

GARY WANG
& ASSOCIATES, INC.
1000 Corporate Center Dr., Ste. 550
Monterey Park, CA 91754
TEL: (626) 288-6898 FAX: (626) 768-7101
http://www.garywang.com

STATE OF TEXAS
ANMAR HIASSAT
133591
LICENSED
PROFESSIONAL ENGINEER

PANDA EXPRESS

POST EXCHANGE MINI MALL
3390 WILLIAM WY
FT SAM HOUSTON, TX

E-100

POWER FLOOR PLAN

BID SET - 01/12/2024 (NOT FOR CONSTRUCTION)

PIVOT ENGINEERING CONSULTANTS INC.
11226 EVERGREEN LOOP
CORONA, CA 92883
(909) 610-5364

1. SWITCHBANK 'A'. REFER TO SCHEDULE 4/E-101.
2. ROUTE HOMERUN THROUGH LIGHTING SWITCHBANK 'A' (SWITCHES AS NOTED IN LOWER CASE). REFER TO SCHEDULE 4/E-101 FOR MORE INFORMATION.
3. ROUTE THROUGH CONTACTS IN HOOD CONTROL PANEL 'M4' FOR CIRCUIT POWER. REFER TO 5/E-400.
4. PROVIDE SEPARATE UNSWITCHED HOT CONDUCTOR (SAME CIRCUIT, NOT CONTROLLED BY SWITCH IN SWITCHBANK) TO LOCALLY SWITCHED FIXTURES AND EMERGENCY FIXTURE BATTERY TRIGGER LEADS.

- CONTRACTOR SHALL PROVIDE ALL REQUIRED HARDWARES, BRACKETS, ETC. FOR A COMPLETE LIGHTING FIXTURE INSTALLATION.
- FIXTURES THAT ARE TO BE ROUTED VIA TIMECLOCKS. SEQUENCE OF OPERATION: TIMECLOCKS WIRED FIRST FOR DESIGNATED CONTROL. SWITCHES ARE SERIES WIRED WITH THE CONTACTORS. UTILIZE DIGITAL OVERRIDE TIMER SWITCH (DOTS) TO OVER-RIDE THE TIMECLOCKS FOR CLEANING AND AFTER HOURS AS NEEDED.
- ALL LIGHTING FIXTURES SHALL BE SUPPORTED PER N.E.C. 410-16(C). SEE DETAIL, 4/E400.
- CONTRACTOR SHALL INSTALL ALL LIGHTING FIXTURES INCLUDING OWNER-FURNISHED FIXTURES.
- ALL FIXTURE BALLASTS SHALL BE U.L. LISTED.
- E.C. SHALL INSTALL OWNER SUPPLIED LED LIGHTING & CUT TO PROPER LENGTH. COORDINATE WITH OWNER FOR EXACT LENGTHS AND FINAL LOCATIONS.
- WHEN WORKING IN JURISDICTIONS WHICH HAVE ADOPTED THE 2008 NEC OR LATER, ALL MULTI-WIRE BRANCH CIRCUITS TO HAVE SEPARATE NEUTRALS TO MEET THE REQUIREMENTS OF 2008 NEC 210.4(B).
- ALL CIRCUITRY SHOWN WITHOUT TICKS SHALL HAVE (2) WIRES PLUS EQUIPMENT GROUNDING CONDUCTOR.
- 'N.L.' DESIGNATION INDICATES NIGHT LIGHT ON UNSWITCHED CIRCUIT.

LIGHTING GENERAL NOTES	2	ⓔ	LIGHTING KEYED NOTES	3
NOT TO SCALE	E-101		NOT TO SCALE	E-101

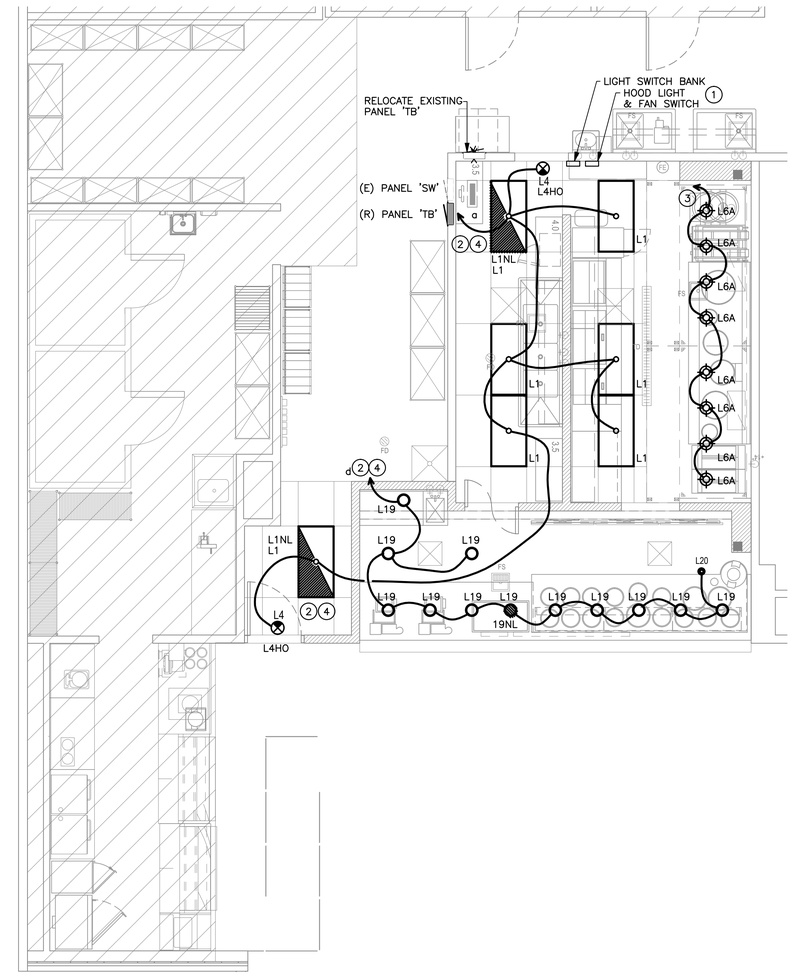

NOTE:
CONTRACTOR TO INSTALL (2) 5 GANG SWITCH BOXES AS SHOWN BELOW. DO NOT INSTALL SEPERATE/INDIVIDUAL BOXES FOR EACH SWITCH

(a)	(c)	(d)
$	$	$
BACK OF THE HOUSE LTG	MENU	SERVING LINE SOFFIT
		(f)
		$
		SPARE

SWITCHBANK SCHEDULE 'A'

TAG	SWITCH TYPE	AREA SERVED / SWITCH LABEL	CIRCUIT	LOAD
a	TOGGLE SWITCH	BACK OF THE HOUSE	'SW' 3	240 VA
c	TOGGLE SWITCH	MENU	'SW' 3	275 VA
d	TOGGLE SWITCH	SERVING LINE SOFFIT	'SW' 3	140 VA
f	TOGGLE SWITCH	INTERIOR DINING, SIGNAGE	'SW' 3	118
i	SPARE			VA

LIGHTING FIXTURE SCHEDULE

PROVIDED FOR INFORMATION ONLY
VERIFY AND INSTALL PER ELECTRICAL DRAWING

ITEM	SYMBOL	DESCRIPTION	QTY.	MFR. & CAT. NO.	REMARK
INTERIOR LIGHTING ITEM					
L1	L1	EDGE-LIT LED PANEL 120-277V UE - UNIVERSAL VOLTAGE		MANUFACTURER: LSI FIXTURE: SPF24-LED-50-UE-DIM-35 LED 5000 LUMENS, 3500K COLOR	KITCHEN CEILING LIGHTS. FURNISHED BY LICENSEE / INSTALLED BY G.C.
L1EM	L1EM	2X4 EDGE-LIT LED PANEL 120-277V UE - UNIVERSAL VOLTAGE		MANUFACTURER: LSI FIXTURE: SPF24-LED-50-UE-DIM-35 LED 5000 LUMENS, 3500K COLOR	EMERGENCY KITCHEN CEILING LIGHTS FURNISHED BY LICENSEE/ INSTALLED BY GC
L4	L4	UNIVERSAL MOUNT EXIT SIGN, LED LIGHTED, 120V WITH BATTERY PACK, 2 FACE, GREEN LETTER		JUNO, NAVILTE, NIBLHO THERMOPLASTIC EMERGENCY LIGHT	EXIT SIGN FURNISHED BY G.C./ INSTALLED BY GC
L19	L19	DOWN LIGHT, RECESSED IN CEILING		ELITE HOUSING: LD6IC-AT LED MODULE: ELITE LED LIGHTING RL607-14W-120-FL-27K-W-WH	FURNISHED BY LICENSEE/ INSTALLED BY GC
L4G2	L4G2	EMERGENCY LIGHT - ELECTRONIX		ELECTRONIX - BLACK COLOR	FURNISHED BY LICENSEE/ INSTALLED BY GC
L6A	L6A	HOOD LIGHT		FURNISHED & INSTALLED BY EQUIPMENT SUPPLIER	LIGHTS SUPPLIED & PRE-WIRED BY HOOD VENDOR. ELECTRIC CONTRACTOR TO CONNECT MAIN WIRES TO SHUNT TRIP BREAKER AND HOOD CONTROL PANEL
L20	L20	LED MR16 DOWN LIGHT, RECESSED IN CEILING		HOUSING: LIGHTOLIER LYTECASTER 302MRSPX TRIM: LIGHTOLIER LYTECASTER 378WHX (WHITE) BULB: LED MR16 MANUFACTURER: GE PRODUCT CODE: 35535	
L40C-R	L40C-R	PENDANT LIGHT		VILLA LIGHTING RED CUPOLA PENDANT 17" DIA	

INTERIOR / EXTERIOR LTG CONTACTORS SCHEDULE	4
NOT TO SCALE	E-101

INTERIOR / EXTERIOR LTG CONTACTORS SCHEDULE 4
NOT TO SCALE E-101

PANDA RESTAURANT GROUP INC.
1683 Walnut Grove Ave.
Rosemead, California
91770
Telephone: 626.799.9898
Facsimile: 626.372.8288

All ideas, designs, arrangement and plans indicated or represented by this drawing are the property of Panda Express Inc. and were created for use on this specific project. None of these ideas, designs, arrangements or plans may be used by or disclosed to any person, firm, or corporation without the written permission of Panda Express Inc.

REVISIONS:

ISSUE DATE:

1	35% SUBMITTAL	06/26/2023
2	95% SUBMITTAL	10/09/2023
3	95% RESUBMITTAL	11/20/2023

DRAWN BY: STAFF

PANDA PROJECT #:
ARCH PROJECT #:

GARY WANG
& ASSOCIATES, INC.
1000 Corporate Center Dr., Ste. 550
Monterey Park, CA 91754
TEL: (626) 288-6898 FAX: (626) 768-7101
http://www.garywang.com

STATE OF TEXAS
ANMAR HIASSAT
133591
LICENSED
PROFESSIONAL ENGINEER

PANDA EXPRESS
POST EXCHANGE MINI MALL
3390 WILLIAM WY
FT SAM HOUSTON, TX

E-101

LIGHTING PLAN

BID SET - 01/12/2024 (NOT FOR CONSTRUCTION)

- ALL ROOF MOUNTED EQUIPMENT SHALL BE IN NEMA-3R ENCLOSURES.
- ALL CONDUIT RUNS SHOWN ON THE ROOF SHALL BE RUN BELOW IN THE CEILING SPACE WHERE AMBIENT TEMPERATURE WILL BE BELOW 30° C. FINAL CONNECTIONS TO THE ROOF EQUIPMENT IS LIMITED TO 5'-0' OF DIRECT SOLAR EXPOSURE.
- VERIFY ALL FUSE SIZES AND TYPES WITH THE MECHANICAL EQUIPMENT MANUFACTURER PRIOR TO INSTALLATION.
- REVIEW THE MECHANICAL PLANS FOR HVAC CONTROL REQUIREMENTS AND SCOPE OF WORK PRIOR TO BIDDING AND INCLUDE ALL COSTS IN BID.
- VERIFY CONNECTION POINTS OF ALL HVAC EQUIPMENT PRIOR TO INSTALLATION. PROVIDE CONTROL VOLTAGE CONNECTION TO DUCT MTD. SMOKE DETECTOR AS REQUIRED BY MECHANICAL DRAWING M-100 AND INTERLOCK WITH FIREALARM.
- SEE MECHANICAL DRAWINGS FOR EXACT LOCATIONS OF MECHANICAL EQUIPMENT AND THERMOSTATS. PROVIDE RACEWAY SYSTEM FOR ALL CONTROL WIRING AS REQUIRED BY MECHANICAL DRAWING M-100.
- E.C. COORDINATE ELECTRICAL, MECHANICAL, FIRE ALARM (IF REQUIIRED) FOR INTERLOCK SEQUENCE FOR FIRE SUPPRESSION.

ROOF PLAN GENERAL NOTES	2
NOT TO SCALE	E-104

1. CIRCUIT FEEDS FROM PANELBOARD - THROUGH HOOD CONTROL PANEL - UP TO ROOF. REFER TO DETAIL, SHEET 2/E-200 & KITCHEN HOOD SUBMITTAL DATA.
2. STUB ELECTRICAL FEED FOR EF-1 & EF-2, THROUGH ROOF ON HINGE SIDE OF EXHAUST FANS, IN LOCATION AS SHOWN ON POWER ROOF PLAN. REFER TO DETAIL 3/M-501 FOR ADDITIONAL DETAILS.

# ROOF PLAN KEYED NOTES	3
NOT TO SCALE	E-104

ROOFTOP EQUIPMENT SCHEDULE

TAG	DESCRIPTION	kW	H.P.	FLA	VOLT/Ø	WIRE, CONDUIT	CONN.	MOUNT HEIGHT	DISC. SW. WITH RK1 FUSES PER MFR'S REQ'S. AND/OR REMARKS
MA-1	MAKE-UP AIR UNIT		5.0	15.0	208V.3Ø	3 #12, #12 GND., 3/4" C.		AT UNIT	1 2
EF-1	EXHAUST FAN		2.0	5.9	208V.3Ø	3 #12, #12 GND., 3/4" C.		AT UNIT	1

1. DISCONNECT SWITCH PROVIDED WITH UNIT.
2. ELECTRICAL FEEDS ARE TO BE ROUTED FROM PLENUM SPACE, UP THROUGH EQUIPMENT CURB, INTO BOTTOM OF EQUIPMENT, THROUGH FACTORY INSTALLED WATER TIGHT CONNECTIONS.

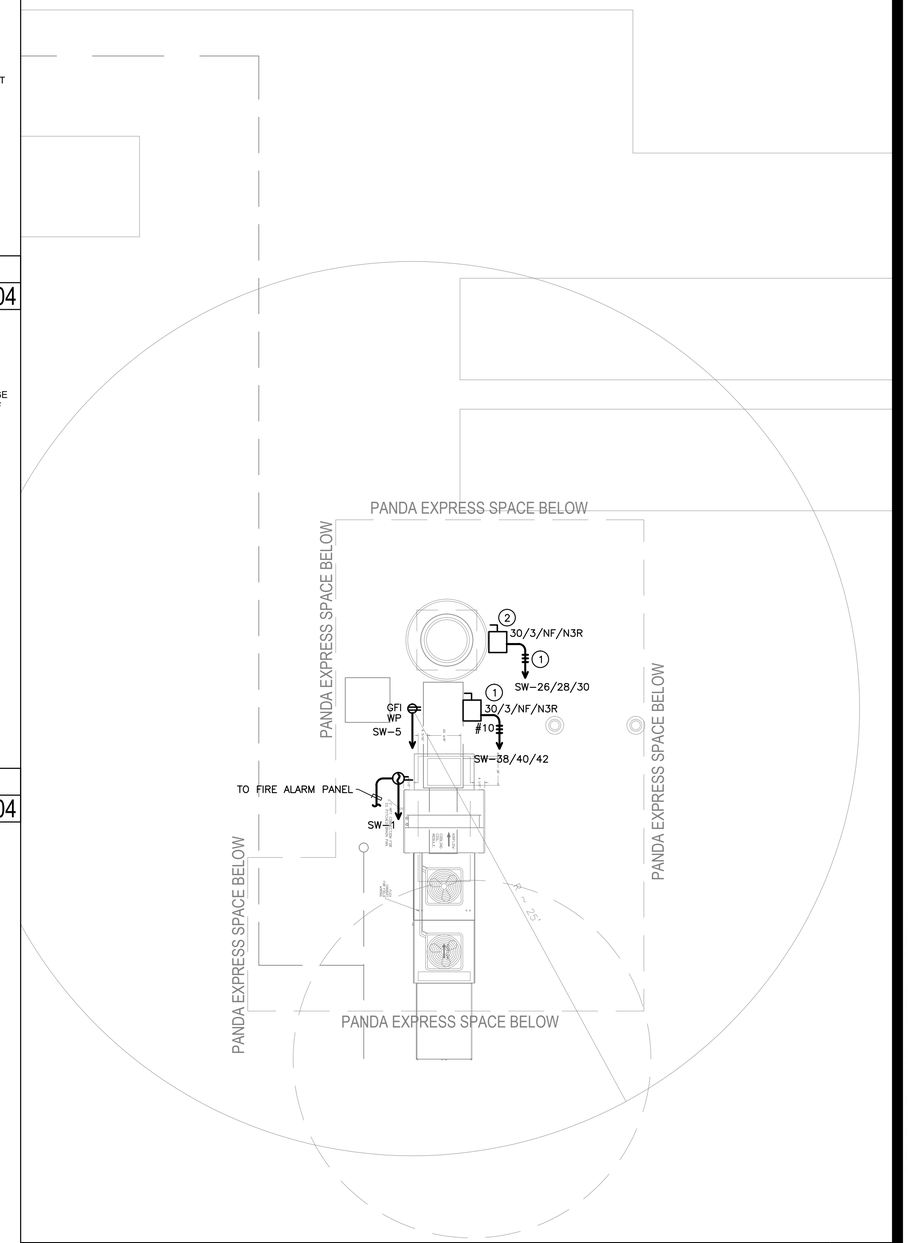

ROOF POWER PLAN	1
1/4" = 1'-0"	E-104

PEC
PIVOT ENGINEERING CONSULTANTS INC.
11226 EVERGREEN LOOP
CORONA, CA 92883
(909) 610-5364

PANDA EXPRESS CHINESE KITCHEN

PANDA RESTAURANT GROUP INC.
1683 Walnut Grove Ave.
Rosemead, California
91770
Telephone: 626.799.9898
Facsimile: 626.372.8288

All ideas, designs, arrangement and plans indicated or represented by this drawing are the property of Panda Express Inc. and were created for use on this specific project. None of these ideas, designs, arrangements or plans may be used by or disclosed to any person, firm, or corporation without the written permission of Panda Express Inc.

REVISIONS:

ISSUE DATE:

1	35% SUBMITTAL	06/26/2023
2	95% SUBMITTAL	10/09/2023
3	95% RESUBMITTAL	11/20/2023

DRAWN BY: STAFF

PANDA PROJECT #:
ARCH PROJECT #:

GARY WANG
& ASSOCIATES, INC.
1000 Corporate Center Dr., Ste. 550
Monterey Park, CA 91754
TEL: (626) 288-6898 FAX: (626) 768-7101
http://www.garywang.com

STATE OF TEXAS
ANMAR HIASSAT
133591
LICENSED
PROFESSIONAL ENGINEER

PANDA EXPRESS
POST EXCHANGE MINI MALL
3390 WILLIAM WY
FT SAM HOUSTON, TX

E-104

ROOF POWER PLAN

BID SET - 01/12/2024 (NOT FOR CONSTRUCTION)

NOT USED 9
NOT TO SCALE E-200

NOT USED 10
NOT TO SCALE E-200

NOT USED 6
NOT TO SCALE E-200

NOT USED 3
NOT TO SCALE E-200

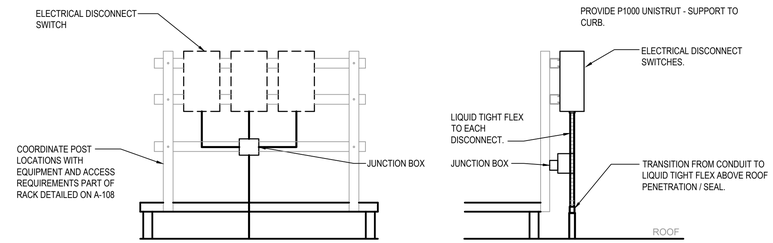

NOTE: LIQUID TIGHT FLEX TO UNITS AND DISCONNECTS NOT SHOWN FOR CLARITY.

NOTE:
ELECTRICAL CONTRACTOR TO PROVIDE (3) HORIZONTAL UNISTRUTS THAT MOUNT TO VERTICAL PIECES OF RACK. RACK PROVIDED BY OTHERS.
REFER TO ARCHITECTURAL DETAILS, A-108, FOR ADDITIONAL INFORMATION.

EQUIPMENT DISCONNECT SWITCH SUPPORT 2
NOT TO SCALE E-200

NOT USED 5
NOT TO SCALE E-200

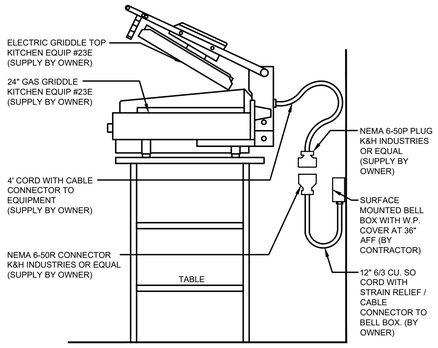

CIRCUIT GRIDDLE TO 50/2 GFCI CIRCUIT BREAKER AND CONNECT TO FIRE SUPPRESSION SHUTDOWN CONTACTOR IN LINE WITH GRIDDLE. REFER TO 13/E-400, FEED WITH (2) #6, (1) #10 GROUND, 3/4" CONDUIT.

NOT USED 7
NOT TO SCALE E-200

ELECTRIC GRILL 23C 4
NOT TO SCALE E-200

NOT USED 1
NOT TO SCALE E-200

PIVOT ENGINEERING CONSULTANTS INC.
11226 EVERGREEN LOOP
CORONA, CA 92883
(909) 610-5364

PANDA RESTAURANT GROUP INC.
1683 Walnut Grove Ave.
Rosemead, California
91770
Telephone: 626.799.9898
Facsimile: 626.372.8288

All ideas, designs, arrangement and plans indicated or represented by this drawing are the property of Panda Express Inc. and were created for use on this specific project. None of these ideas, designs, arrangements or plans may be used by or disclosed to any person, firm, or corporation without the written permission of Panda Express Inc.

REVISIONS:

ISSUE DATE:

1	35% SUBMITTAL	06/26/2023
2	95% SUBMITTAL	10/09/2023
3	95% RESUBMITTAL	11/20/2023

DRAWN BY: STAFF

PANDA PROJECT #:
ARCH PROJECT #:

GARY WANG
& ASSOCIATES, INC.
1000 Corporate Center Dr., Ste. 550
Monterey Park, CA 91754
TEL: (626) 288-6898 FAX: (626) 768-7101
http://www.garywang.com

STATE OF TEXAS
ANMAR HIASSAT
133591
LICENSED
PROFESSIONAL ENGINEER

PANDA EXPRESS
POST EXCHANGE MINI MALL
3390 WILLIAM WY
FT SAM HOUSTON, TX

E-200

ELECTRICAL ELEVATIONS

BID SET - 01/12/2024 (NOT FOR CONSTRUCTION)

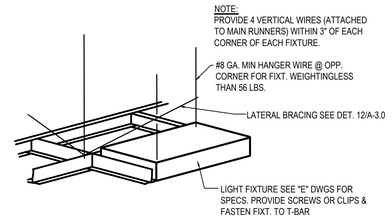

LIGHT FIXTURE DETAIL 4

NOT TO SCALE E-400

DEVICE ORIENTATION

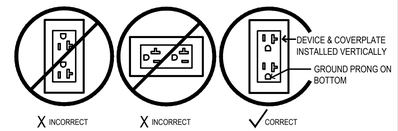

DEVICE & COVERPLATE COLOR

LOCATION	DEVICE COLOR	COVER PLATE COLOR	NOTES
DINING ROOM (WALLS)	VERIFY W/PX	VERIFY W/PX	VERIFY WITH PANDA PM PRIOR TO PURCHASE AND INSTALL
DINING ROOM (IN BULKHEAD ABOVE WINDOWS)	VERIFY W/PX	VERIFY W/PX	VERIFY WITH PANDA PM PRIOR TO PURCHASE AND INSTALL
DINING ROOM (WHEN IN CEILING)	BLACK	BLACK	@ SHOW WINDOW IN DARK CEILING (IF APPLICABLE)
RESTROOM	GREY	STAINLESS STEEL	--
RESTROOM VESTIBULE	GREY	STAINLESS STEEL	--
KITCHEN/SERVICE AREAS	GREY	STAINLESS STEEL	--

DEVICE / RECEPTACLE SCHEDULE 3

NOT TO SCALE E-400

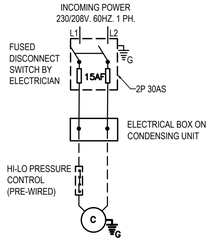

CONDENSING UNIT 7

NOT TO SCALE E-400

NOT USED 10

NOT TO SCALE E-400

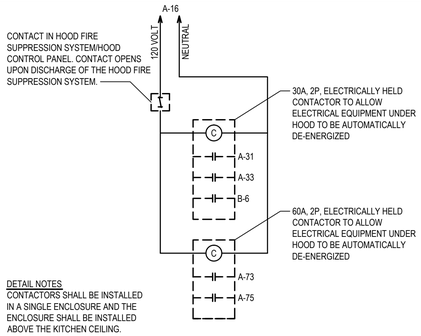

FIRE SUPPRESSION SHUTDOWN 13

NOT TO SCALE E-400

1. WIRING SHOULD BE DONE ACCORDING WITH NATIONAL AND LOCAL CODE.

2. CHECK VOLTAGE ON CONDENSING UNIT AND EVAPORATOR COIL BEFORE ANY WORK IS DONE.

3. SOLID LINES TO BE WIRED BY LICENSED ELECTRICIAN ON SITE. DOTTED LINES ARE MANUFACTURE PRE-WIRED.

4. ANY PENETRATIONS THROUGH BOX SHALL BE SEALED AIR TIGHT.

WIC/WIF WIRING NOTES 6

NOT TO SCALE E-400

NOT USED 9

NOT TO SCALE E-400

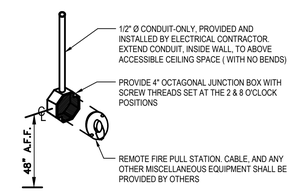

ANSUL PULL STATION DETAIL 2

NOT TO SCALE E-400

NOT USED 11

NOT TO SCALE E-400

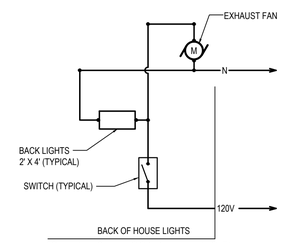

NOTE: EXHAUST FAN TO OPERATE WITH KITCHEN LIGHTS TO REGULATE BUILDING PRESSURE.

EXHAUST FAN CONTROL DIAGRAM 5

NOT TO SCALE E-400

NOT USED 8

NOT TO SCALE E-400

PEC

PIVOT ENGINEERING CONSULTANTS INC.
11226 EVERGREEN LOOP
CORONA, CA 92883
(909) 610-5364

NOT USED 1

NOT TO SCALE E-400

PANDA EXPRESS CHINESE KITCHEN

PANDA RESTAURANT GROUP INC.
1683 Walnut Grove Ave.
Rosemead, California
91770
Telephone: 626.799.9898
Facsimile: 626.372.8288

All ideas, designs, arrangement and plans indicated or represented by this drawing are the property of Panda Express Inc. and were created for use on this specific project. None of these ideas, designs, arrangements or plans may be used by or disclosed to any person, firm, or corporation without the written permission of Panda Express Inc.

REVISIONS:

ISSUE DATE:

1	35% SUBMITTAL	06/26/2023
2	95% SUBMITTAL	10/09/2023
3	95% RESUBMITTAL	11/20/2023

DRAWN BY: STAFF

PANDA PROJECT #:

ARCH PROJECT #:

GARY WANG
& ASSOCIATES, INC.
1000 Corporate Center Dr., Ste. 550
Monterey Park, CA 91754
TEL: (626) 288-6898 FAX: (626) 768-7101
http://www.garywang.com

STATE OF TEXAS
ANMAR HIASSAT
133591
LICENSED
PROFESSIONAL ENGINEER

PANDA EXPRESS

POST EXCHANGE MINI MALL
3390 WILLIAM WY
FT SAM HOUSTON, TX

E-400

HOT - MEDUIM
ELECTRICAL DETAILS, DIAGRAM

BID SET - 01/12/2024 (NOT FOR CONSTRUCTION)

PANELBOARD NOTES ( )

(1) KITCHEN EQUIPMENT SHOWN AT 65% IN PANEL TOTALS PER NEC (KITCHEN EQUIPMENT).

(2) TERMINATE GROUND ON ISOLATED GROUND BUS.

(3) ROUTE CIRCUIT THROUGH LIGHTING CONTACTOR, CONTROLLED BY TIMECLOCK. REFER TO DETAILS, SHEET 11/E-400.

(4) WIRE SIZE INCREASE DUE TO VOLTAGE DROP. SIZE EQUIPMENT GROUND CONDUCTOR PROPORTIONALLY PER NEC.

(5) REFER TO ONE-LINE DIAGRAM FOR WIRE SIZES.

(6) GFCI BREAKER

(7) INSTALL LOCKING DEVICE (LOCK-OFF FOR MAITENANCE).

PROVIDE AN ARC FLASH WARNING SIGN PER NEC 110.16.

PNL SW — PANELBOARD (EXISTING)

MOUNTING: FLUSH
LOCATION: ELEC. CABINET
TYPE: BOLT ON W/GROUND BUS
NEMA RATING: 1

INTERIOR PANELBOARDS SHALL BE RECESSED WITH FLANGED/REMOVABLE SCREW-ON COVER. SURFACE MOUNTED PANELBOARDS OR HINGED/FLUSH COVERS NOT ALLOWED

208Y/120V, 3PH, 4W
250A M.L.O.
SERIES RATED 65/10K A.I.C.
GROUND BUS
ISOLATED GROUND

		DESCRIPTION	WIRE	BRKR	PL	KVA A	KVA B	KVA C	PL	BRKR	WIRE	DESCRIPTION		
	1	DUCT DETECTORS	12	20	1	0.20			1	20		SPARE		2
	3	LTG-FOOD PRP/EF3 (4)	10	20	1		1.13	0.9	2	20	12	MICROWAVE – 55A (1)	(6)	4
	5	RECEP – ROOF	12	20	1			0.18 0.9						6
	7	SPARE		20	1				1	20		SPARE		8
	9	SPARE		20	1				1	20		SPARE		10
	11	SPARE		20	1				1	20		SPARE		12
	13	SPARE		20	1				2	20		SPARE		14
	15	SPARE		20	1					20		SPARE		16
	17	SPARE		20	1				1	20		SPARE		18
	19	SPARE		20	1				1	20		SPARE		20
	21	SPARE		20	1				1	20		SPARE		22
	23	LG – MONITORS	12	20	1			1.5	1	20		SPARE		24
	25	SPARE				1.00			3	15	12	EF-1		26
	27	SPARE					1.00		1	20				28
	29	SPARE						1.00	1	20				30
	31	SPARE		20	1				1	20		SPARE		32
	33	SPARE		20	1				1	20		SPARE		34
(6)	35	21A – FRYER [SH]	12	20	1			0.20	1	20		SPARE		36
	37	SPARE				2.53			3	30	10	MAU-1		38
	39	SPARE					2.53		1	20				40
	41	SPARE						2.53	1	20				42
		PANELBOARD TOTALS CALCULATED			TOTAL	3.73	5.56	6.31	KVA					
		PER NEC ARTICLE 220				31.08	46.33	52.58	AMPS					
					TOTAL LOAD	15.6	KVA	43.30	AMPS					
					FEEDER LOAD	15.6	KVA	43.30	AMPS					

[SH] = SHUNT TRIP BREAKER

PROVIDE AN ARC FLASH WARNING SIGN PER NEC 110.16.

PNL TB — PANELBOARD (EXISTING)

MOUNTING: FLUSH
LOCATION: ELEC. CABINET
TYPE: BOLT ON W/GROUND BUS
NEMA RATING: 1

INTERIOR PANELBOARDS SHALL BE RECESSED WITH FLANGED/REMOVABLE SCREW-ON COVER. SURFACE MOUNTED PANELBOARDS OR HINGED/FLUSH COVERS NOT ALLOWED

208Y/120V, 3PH, 4W
225A M.L.O.
SERIES RATED 65/10K A.I.C.
GROUND BUS
ISOLATED GROUND

		DESCRIPTION	WIRE	BRKR	PL	KVA A	KVA B	KVA C	PL	BRKR	WIRE	DESCRIPTION		
	1	WIC DISPLAY LTS/MENUBRD/LED	12	20	1	0.33	1.00		1	20	12	FAX '87', MGR '84C', COMP '49A'		2
	3	HOOD CONTL PNL 'M4'	12	20	1		0.50	0.60	1	20	12	MUSIC, VCR, MONITOR		4
	5	SERVICE POS 94, PTR '86A'(2,6)	12	20	1			1.10 0.50	1	20	12	COMPUTER RECEP '83A' (2)		6
	7	POS '94'/PTRS '86A'(2,6)	12	20	1	1.00			2	20		SPARE		8
	9	SPARE		20	1		0.72							10
(6)	11	RICE WARMER '54A' (1,4)	12	20	1			0.11 0.50	1	20	12	[SH] 30Jn – WORKTOP FREEZER	(6)	12
	13	SPARE	12	20	2	0.75	1.08		1	20	12	[SH] 34n – PREP TABLE	(6)	14
	15						0.75	1.44	1	20	12	[SH] 34ARn – FREEZER	(6)	16
(6)	17	53 – FOOD PROCESSOR	10	20	1			1.2 0.10	1	20	12	FIRE SUPPRES SHUTDOWN		18
(6)	19	23C – GAS GRIDDLE [SH]	10	30	2	1.82	1.30		1	20	10	INDUCT WELL 3F, 3G (1,4,6)	(6)	20
	21	2Q – BEVERAGE COUNTER	12	20	1		0.65	1.30	1	20	10	INDUCT WELL 3F, 3G (1,4,6)	(6)	22
	23	SPARE		20	1			1.30	1	20	10	INDUCT WELL 3F, 3G (1,4,6)	(6)	24
	25	SPARE		20	1	1.30			1	20	10	INDUCT WELL 3F, 3G (1,4,6)	(6)	26
	27	SPARE		20	1		1.30		1	20	10	INDUCT WELL 3F, 3G (1,4,6)	(6)	28
	29	SPARE		20	1			1.30	1	20	10	INDUCT WELL 3F, 3G (1,4,6)	(6)	30
	31	RICE HOLD CAB '24H' (1,4,6)	10	20	1	1.78	1.30		1	20	12	INDUCT WELL 3F, 3G (1,4,6)	(6)	32
	33	SPARE		20	1			0.84	1	20	12	RAD TOP HEATER '1S2B1' (1)	(6)	34
	35	SPARE		20	1			1.10	1	20	12	RAD TOP HEATER '1S2B2' (1)	(6)	36
	37	SPARE		20	1		1.10		1	20	12	RAD TOP HEATER '1S2B2' (1)	(6)	38
	39	SPARE		20	1				1	20	12	SPARE		40
	41	SPARE		20	1				1	20		SPARE		42
	43	SPARE		20	1				1	20		SPARE		44
	45	SPARE		20	1				1	20		SPARE		46
	47	SPARE		20	1				1	20		SPARE		48
	49	SPARE		20	1				1	20		SPARE		50
	51	SPARE		20	1				1	20		SPARE		52
	53	SPARE		20	1				1	20		SPARE		54
		PANELBOARD TOTALS CALCULATED			TOTAL	12.76	8.1	7.21	KVA					
		PER NEC ARTICLE 220				106.33	67.5	60.08	AMPS					
					TOTAL LOAD	28.07	KVA	77.91	AMPS					
					FEEDER LOAD	28.07	KVA	77.91	AMPS					

[SH] = SHUNT TRIP BREAKER

1. UNLESS NOTED, ALL DEVICES AND TERMINATIONS 100 AMPS AND LESS TO BE RATED FOR 60°C WIRE, OVER 100 AMPS, 75°C WIRE.
2. CONTRACTOR TO SUBMIT SERVICE ENTRANCE GEAR SHOP DRAWINGS TO SERVING UTILITY COMPANY FOR APPROVAL.
3. ALL WIRE #8 AND SMALLER TO BE THWN/THHN CU.; #6 AND LARGER TO BE XHHW CU.
4. THE DESIGN PROFESSIONAL HAS PERFORMED ALL REQUIRED LOAD CALCULATIONS AND VERIFIES THAT ALL UPSTREAM PANELS AND EQUIPMENT ARE NOT OVERLOADED.
5. E.C. SHALL PROVIDE GROUNDING PER NEC ARTICLE 250, RE: 1/E400 FOR ADDITIONAL INFORMATION.

SINGLE LINE DIAGRAM GENERAL NOTES — 3

NOT TO SCALE — E-601

1. ENTIRE INSTALLATION TO COMPLY WITH N.E.C. 110.22 AND 240.86(B).
2. NO DESIGN CHANGES MAY BE MADE TO THE SYSTEM WITHOUT THE PRIOR APPROVAL OF THE DESIGN ELECTRICAL ENGINEER AND THE ELECTRICAL INSPECTOR.
3. A TWO TIER 65000/10000 AIC SERIES RATING SYSTEM IS SPECIFIED BETWEEN THE SES MAINS FUSES AND THE PANEL BRANCH CIRCUIT BREAKERS, NO SUBSTITUTIONS - UNLESS A FULLY RATED SYSTEM IS PROVIDED.
4. MOTOR CONTRIBUTION TO THE FAULT CURRENT IS LESS THAN 1% OF THE INTERRUPTING RATING OF THE DOWNSTREAM CIRCUIT BREAKER(S).
5. THE ELECTRICAL CONTRACTOR SHALL PROVIDE LABELS AT ALL COMPONENTS OF THE SERIES PROTECTED SYSTEM; AT PANEL 'A' STATING "CAUTION - 65/10 SERIES COMBINATION SYSTEM RATED 21,572 AMPERES. IDENTIFIED REPLACEMENT COMPONENTS REQUIRED", AT PANEL 'B' STATING "CAUTION - 65/10 SERIES COMBINATION SYSTEM RATED 20,985 AMPERES. IDENTIFIED REPLACEMENT COMPONENTS REQUIRED". IDENTIFIED REPLACEMENT COMPONENTS REQUIRED"
6. EQUIPMENT SUPPLIER TO PROVIDE CUT SHEETS OF ALL SERIES RATED COMPONENTS (I.E. FUSES, CIRCUIT BREAKERS) HI-LIGHTING EACH ITEM AND THE SPECIFIC LISTING/TESTING OF EACH ITEM'S SERIES RATING WITH THE OTHER.
7. POST THIS INFORMATION ON THE JOB-SITE WITH PERMIT FOR CITY ELECTRICAL INSPECTOR'S REVIEW/APPROVAL.

SERIES RATING NOTES — 4

NOT TO SCALE — E-601

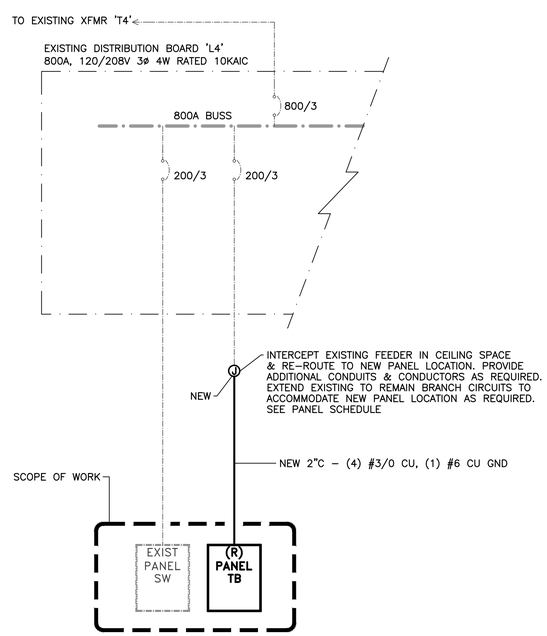

NOTE: ALL SHOWN EQUIPMENT IS EXISTING UNLESS MARKED AS NEW.

SINGLE LINE DIAGRAM — 2

NOT TO SCALE — E-601

PANEL SCHEDULES — 1

NOT TO SCALE — E-601

PEC
PIVOT ENGINEERING CONSULTANTS INC.
11226 EVERGREEN LOOP
CORONA, CA 92883
(909) 610-5364

[redacted]

PANDA EXPRESS CHINESE KITCHEN

PANDA RESTAURANT GROUP INC.
1683 Walnut Grove Ave.
Rosemead, California
91770
Telephone: 626.799.9898
Facsimile: 626.372.8288

[redacted]

All ideas, designs, arrangement and plans indicated or represented by this drawing are the property of Panda Express Inc. and were created for use on this specific project. None of these ideas, designs, arrangements or plans may be used by or disclosed to any person, firm, or corporation without the written permission of Panda Express Inc.

[redacted]

REVISIONS:

ISSUE DATE:

1	35% SUBMITTAL	06/26/2023
2	95% SUBMITTAL	10/09/2023
3	95% RESUBMITTAL	11/20/2023

[redacted]

DRAWN BY: STAFF

[redacted]

PANDA PROJECT #:
ARCH PROJECT #:

[redacted]

GARY WANG
& ASSOCIATES, INC.
1000 Corporate Center Dr., Ste. 550
Monterey Park, CA 91754
TEL: (626) 288-6898 FAX: (626) 768-7101
http://www.garywang.com

[redacted]

STATE OF TEXAS
ANMAR HIASSAT
133591
LICENSED
PROFESSIONAL ENGINEER

[redacted]

PANDA EXPRESS
POST EXCHANGE MINI MALL
3390 WILLIAM WY
FT SAM HOUSTON, TX

[redacted]

E-600

PANELS, SINGLE LINE, LOAD CALC'S

[redacted]

BID SET - 01/12/2024 (NOT FOR CONSTRUCTION)